1. Town Council - Agenda

   Documents:

   2016_08_09_CC_RG_AG.PDF

2. Town Council - Agenda Packet

   Documents:

   2016_08_09_CC_RG_ PK.PDF

3. Town Council - Agenda Item 7b, Attachment D

   Documents:

   AGENDA ITEM 7B, ATTACHMENT D.PDF

Town of Chino Valley

MEETING NOTICE
TOWN COUNCIL

REGULAR MEETING
Tuesday, August 9, 2016
6:00 P.M.

Council Chambers
202 N. State Route 89
Chino Valley, Arizona

A majority of the Councilmembers may attend a private invocation in the Council Conference Room immediately prior to the Council meeting. No Town business will be discussed.

AGENDA

1. CALL TO ORDER, PLEDGE OF ALLEGIANCE; ROLL CALL

2. INTRODUCTIONS, PRESENTATIONS, AND PROCLAMATIONS

a. Proclamation declaring August 21-27, 2016 as "Employer Support of the Guard and Reserve Week," sponsored by the Arizona Employer Support of the Guard and Reserve.

3. CALL TO THE PUBLIC

Call to the Public is an opportunity for the public to address the Council on any issue within the jurisdiction of the Council that is not on the agenda. Public comment is encouraged. Individuals are limited to speak for three (3) minutes. The total time for Call to the Public may be up to 30 minutes per meeting. Council action taken as a result of public comment will be limited to directing staff to study the matter, scheduling the matter for further consideration and decision at a later date, or responding to criticism.

4. RESPONSE TO THE PUBLIC

Response to the Public is an opportunity for the Mayor to inform the public about how Town officials addressed matters raised during Call to the Public at a previous meeting.

a. Comments regarding trash in Town.

b. Comments regarding political signs disappearing.

c. Suggestion to provide transportation for voters on election day.

d. Question regarding benefits to medical marijuana farms in Chino Valley.

5. CURRENT EVENT SUMMARIES AND REPORTS

This item is for information only. The Mayor, any Councilmember, or Town Manager may present a brief summary or report of current events, or ask a staff member to provide the same. Presentation on information requested by the Mayor and Council will be made and questions answered. No action will be taken.

a. Status reports by Mayor and Council regarding current events.

b. Status report by Town Manager Robert Smith regarding Town accomplishments, and current or upcoming projects.

6. CONSENT AGENDA

All those items listed below are considered to be routine and may be enacted by one motion. Any Councilmember may request to remove an item from the Consent Agenda to be considered and discussed separately.

a. Consideration and possible action to approve contract between the Town of Chino Valley and Kubota Membrane USA Corporation for purchase of Kubota membrane cartridge filters type 510 and accessory equipment for the Chino Valley wastewater treatment facility in the amount of $308,840.00. (Chris Bartels, Utility Supervisor)

7. ACTION ITEMS

The Council may vote to recess the public meeting and hold an Executive Session on any item on this agenda pursuant to A.R.S. § 38-431.03(A)(3) for the purpose of discussion or consultation for legal advice with the Town Attorney. Executive sessions are not open to the public and no action may be taken in executive session.

a. Consideration and possible action to approve Resolution No. 16-1089 approving a guaranteed energy cost savings program and agreements with Climatec, LLC for purchase and installation of improvements to Town facilities for the purpose of reducing energy costs and to measure and verify the savings after the installation is complete. (Phyllis Smiley, Town Attorney)

Recommended Action: Approve Resolution No. 16-1089, to approve a guaranteed energy cost saving program and the following agreements with Climatec LLC:

(i) Installation Agreement in the amount of $606,135.00, and

(ii) Measurement and Verification Agreement in the amount of $4500 per year for the first 3 years and escalating 4% annually for every subsequent year thereafter for a term of 15 years.

b. Consideration and possible action to approve the Scope of Work, between the Town of Chino Valley and the Chino Valley Area Chamber of Commerce as an addendum to their Accountability Contract for FY 16/17 in an amount of Thirty-Eight Thousand ($38,000.00) dollars. (Cecilia Grittman, Assistant Town Manager)

Recommended Action: Approve the Scope of Work between the Town of Chino Valley and the Chino Valley Area Chamber of Commerce as an addendum to their Accountability Contract for FY 16/17 in the amount of Thirty-Eight Thousand ($38,000.00) dollars.

c. Consideration and possible action to approve Financial Report for the twelve months ending June 30, 2016. (Joe Duffy, Finance Director)

Recommended Action: Approve Financial Report for the twelve months ending June 30, 2016.

d. Consideration and possible action to approve recommended budget adjustments for the Fiscal Year Ending June 30, 2016. (Joe Duffy, Finance Director)

Recommended Action: Approve recommended budget adjustments for Fiscal Year Ending June 30, 2016.

8. EXECUTIVE SESSION

Council may vote to recess the Regular Meeting and hold an executive session, which will not be open to the public, for the following purposes.

9. ACTION ITEMS RESUMED

After the Executive Session, Council will reconvene the Regular Meeting.

10. ADJOURNMENT

Dated this 4th day of August, 2016.

By: ***Jami C. Lewis, Town Clerk***

The Town of Chino Valley endeavors to make all public meetings accessible to persons with disabilities. Please call 636-2646 (voice) or 711 (Telecommunications Arizona Relay Service) 48 hours prior to the meeting to request a reasonable accommodation to participate in this meeting.

Supporting documentation and staff reports furnished to the Council with this agenda are available for review on the Town website at http://www.chinoaz.net/agendacenter and in the Public Library and Town Clerk's Office.

CERTIFICATION OF POSTING

The undersigned hereby certifies that a copy of this notice was duly posted at Chino Valley South Campus, Chino Valley Post Office, and Chino Valley North Campus in accordance with the statement filed by the Town Council with the Town Clerk.

Date:_____ Time:_____ By:_____

Jami C. Lewis, Town Clerk

Town of Chino Valley

MEETING NOTICE
TOWN COUNCIL

REGULAR MEETING
Tuesday, August 9, 2016
6:00 P.M.

Council Chambers
202 N. State Route 89
Chino Valley, Arizona

A majority of the Councilmembers may attend a private invocation in the Council Conference Room immediately prior to the Council meeting. No Town business will be discussed.

AGENDA

1. CALL TO ORDER, PLEDGE OF ALLEGIANCE; ROLL CALL

2. INTRODUCTIONS, PRESENTATIONS, AND PROCLAMATIONS

a. Proclamation declaring August 21-27, 2016 as "Employer Support of the Guard and Reserve Week," sponsored by the Arizona Employer Support of the Guard and Reserve.

3. CALL TO THE PUBLIC

Call to the Public is an opportunity for the public to address the Council on any issue within the jurisdiction of the Council that is not on the agenda. Public comment is encouraged. Individuals are limited to speak for three (3) minutes. The total time for Call to the Public may be up to 30 minutes per meeting. Council action taken as a result of public comment will be limited to directing staff to study the matter, scheduling the matter for further consideration and decision at a later date, or responding to criticism.

4. RESPONSE TO THE PUBLIC

Response to the Public is an opportunity for the Mayor to inform the public about how Town officials addressed matters raised during Call to the Public at a previous meeting.

a. Comments regarding trash in Town.

b. Comments regarding political signs disappearing.

c. Suggestion to provide transportation for voters on election day.

d. Question regarding benefits to medical marijuana farms in Chino Valley.

5. CURRENT EVENT SUMMARIES AND REPORTS

This item is for information only. The Mayor, any Councilmember, or Town Manager may present a brief summary or report of current events, or ask a staff member to provide the same. Presentation on information requested by the Mayor and Council will be made and questions answered. No action will be taken.

a. Status reports by Mayor and Council regarding current events.

b. Status report by Town Manager Robert Smith regarding Town accomplishments, and current or upcoming projects.

6. CONSENT AGENDA

All those items listed below are considered to be routine and may be enacted by one motion. Any Councilmember may request to remove an item from the Consent Agenda to be considered and discussed separately.

a. Consideration and possible action to approve contract between the Town of Chino Valley and Kubota Membrane USA Corporation for purchase of Kubota membrane cartridge filters type 510 and accessory equipment for the Chino Valley wastewater treatment facility in the amount of $308,840.00. (Chris Bartels, Utility Supervisor)

7. ACTION ITEMS

The Council may vote to recess the public meeting and hold an Executive Session on any item on this agenda pursuant to A.R.S. § 38-431.03(A)(3) for the purpose of discussion or consultation for legal advice with the Town Attorney. Executive sessions are not open to the public and no action may be taken in executive session.

a. Consideration and possible action to approve Resolution No. 16-1089 approving a guaranteed energy cost savings program and agreements with Climatec, LLC for purchase and installation of improvements to Town facilities for the purpose of reducing energy costs and to measure and verify the savings after the installation is complete. (Phyllis Smiley, Town Attorney)

Recommended Action: Approve Resolution No. 16-1089, to approve a guaranteed energy cost saving program and the following agreements with Climatec LLC:

(i) Installation Agreement in the amount of $606,135.00, and

(ii) Measurement and Verification Agreement in the amount of $4500 per year for the first 3 years and escalating 4% annually for every subsequent year thereafter for a term of 15 years.

b. Consideration and possible action to approve the First Amendment to Accountability Contract and Scope of Services, between the Town of Chino Valley and the Chino Valley Area Chamber of Commerce for FY 16/17 in an amount of Thirty-Eight Thousand ($38,000.00) dollars. (Cecilia Grittman, Assistant Town Manager)

Recommended Action: Approve the First Amendment to Accountability Contract and Scope of Services between the Town of Chino Valley and the Chino Valley Area Chamber of Commerce for FY 16/17 in the amount of Thirty-Eight Thousand ($38,000.00) dollars.

c. Consideration and possible action to approve Financial Report for the twelve months ending June 30, 2016. (Joe Duffy, Finance Director)

Recommended Action: Approve Financial Report for the twelve months ending June 30, 2016.

d. Consideration and possible action to approve recommended budget adjustments for the Fiscal Year Ending June 30, 2016. (Joe Duffy, Finance Director)

Recommended Action: Approve recommended budget adjustments for Fiscal Year Ending June 30, 2016.

8. EXECUTIVE SESSION

Council may vote to recess the Regular Meeting and hold an executive session, which will not be open to the public, for the following purposes.

9. ACTION ITEMS RESUMED

After the Executive Session, Council will reconvene the Regular Meeting.

10. ADJOURNMENT

Dated this 4th day of August, 2016.

By: ***Jami C. Lewis, Town Clerk***

The Town of Chino Valley endeavors to make all public meetings accessible to persons with disabilities. Please call 636-2646 (voice) or 711 (Telecommunications Arizona Relay Service) 48 hours prior to the meeting to request a reasonable accommodation to participate in this meeting.

Supporting documentation and staff reports furnished to the Council with this agenda are available for review on the Town website at http://www.chinoaz.net/agendacenter and in the Public Library and Town Clerk's Office.

CERTIFICATION OF POSTING

The undersigned hereby certifies that a copy of this notice was duly posted at Chino Valley South Campus, Chino Valley Post Office, and Chino Valley North Campus in accordance with the statement filed by the Town Council with the Town Clerk.

Date:_____ Time:_____ By:_____

Jami C. Lewis, Town Clerk

TOWN OF CHINO VALLEY
COUNCIL AGENDA ITEM STAFF REPORT

Town Council Regular Meeting **Item No. 2. a.**

Meeting Date: 08/09/2016

Contact Person: Jami Lewis, Town Clerk
Phone: 928-636-2646 x-1208

Department: Council

Estimated length of Staff Presentation:

Physical location of item: N/A

AGENDA ITEM TITLE:

Proclamation declaring August 21-27, 2016 as "Employer Support of the Guard and Reserve Week," sponsored by the Arizona Employer Support of the Guard and Reserve.

SITUATION & ANALYSIS:

ESGR, a Department of Defense agency, was established in 1972 to promote cooperation and understanding between Reserve Component Service members and their civilian employers and to assist in the resolution of conflicts arising from an employee's military commitment. ESGR is supported by a network of more than 4,900 volunteers in 54 committees located across all 50 states, the District of Columbia, Guam-CNMI, Puerto Rico and the U.S. Virgin Islands. Volunteers, hailing from small business and industry, government, education and prior military service bring a vast wealth of experience to assist in serving employers, service members and their families. Together with Headquarters ESGR staff and a small cadre of support staff for each State Committee, volunteers work to promote and enhance employer support for military service in the Guard and Reserve.

ESGR has served our country for more than 40 years, fostering a culture in which all employers support and value the employment and military service of members of the National Guard and Reserve in the United States. These citizen warriors could not defend and protect us at home and abroad without the continued promise of meaningful civilian employment for themselves and their families. ESGR has continued to adapt to meet the needs of Reserve Component members, their families and America's employers by joining forces with a network.

During the week of August 21-27, 2016 the Top 15 employers from across the country will be nationally recognized by the Secretary of Defense. We would like to declare this week as Employer Support of the Guard and Reserve Week in support of these outstanding employers.

Attachments

Proclamation - Employer Support of the Guard & Reserve Week

Office of the Mayor

202 N. State Route 89
Chino Valley, AZ 86323
(928) 636-2646

PROCLAMATION

Employer Support of the Guard and Reserve Week
August 21-27, 2016

Whereas, *National Guard and Reserve forces comprise nearly half of our nation's military strength and are essential to America's national security. Reserve Component forces stand ready to answer the call to serve, whether serving alongside active duty counterparts all across the globe or responding to humanitarian crises at home and abroad; and*

Whereas, *employers provide critical support to members of the National Guard and Reserve; allowing Citizen Warriors to serve whenever the Nation calls, often foregoing financial gain and making sacrifices in the process; and*

Whereas, *employer support is stronger than ever, more than 42 years after President Richard Nixon authorized the Secretary of Defense to establish the National Committee for Employer Support of the Guard and Reserve (ESGR); and*

Whereas, *our nation is in debt to the Citizen Warriors departing the comforts of home to ensure our freedoms remain intact. Likewise, America pays special tribute to the commitment of dedicated and supportive employers who continue to make service in the Reserve Components possible; and*

Now, Therefore, *I, Chris Marley, Mayor of the Town of Chino Valley, do hereby proclaim August 21-27, 2016 as National Employer Support of the Guard and Reserve Week in Chino Valley, Arizona and urge all of our citizens to recognize this observances.*

In Witness Whereof, *I have hereunto set my hand and caused the Seal of the Town of Chino Valley to be affixed this* ***9th*** *day of* ***August, 2016****.*

Chris Marley, Mayor

ATTEST: *Jami C. Lewis, Town Clerk*

TOWN OF CHINO VALLEY
COUNCIL AGENDA ITEM STAFF REPORT

Town Council Regular Meeting **Item No. 6. a.**

Meeting Date: 08/09/2016
Contact Person: Chris Bartels, Utility Supervisor
Phone: 928-636-2646 x-1233
Department: Public Works
Item Type: Consent
Estimated length of staff presentation: None
Physical location of item: 2190 Rodeo Drive, Chino Valley AZ 86323

AGENDA ITEM TITLE:

Consideration and possible action to approve contract between the Town of Chino Valley and Kubota Membrane USA Corporation for purchase of Kubota membrane cartridge filters type 510 and accessory equipment for the Chino Valley wastewater treatment facility in the amount of $308,840.00.

RECOMMENDED ACTION:

Approve contract between the Town of Chino Valley and Kubota Membrane USA Corporation for the Purchase of Kubota membrane cartridge filters type 510 and accessory equipment for the Chino Valley wastewater treatment facility in the amount of $308,840.00.

SITUATION AND ANALYSIS:

Issue Statement

Applicable "Policy"

Satisfaction of "Policy"

Summary of Issues and Staff Rationale

Findings of Fact

Fiscal Impact

Fiscal Impact?: yes
If Yes, Budget Code: 06-83-5422
Available: $350,000
Funding Source:
Capital Improvement Expenditures

Attachments

Kubota Purchase Contract
Kubota Bid

PURCHASE CONTRACT

Vendor: Kubota Membrane USA Corporation
Vendor Address: 11807 North Creek Parkway S., Suite B-109 Bothell, WA 98011

This Contract is entered into between the Town of Chino Valley, Arizona ("Chino Valley") and Kubota Membrane USA Corporation ("Vendor") this 9th day of August, 2016.

1. Agreement to Purchase: Chino Valley agrees to purchase and Vendor agrees to sell, pursuant to the terms and conditions set forth herein, the supplies described in Exhibit A ("Purchased Items") in accordance with all requirements of the General Conditions, Specifications and Design Standards and Vendor's bid. The General Conditions, Purchased Items Specifications and Design Standards and Vendor's bid are incorporated into this Contract as though fully set forth herein.

2. Risk of Loss: Vendor shall bear all risks of loss, injury or destruction of goods and materials contracted for hereunder which occur prior to delivery of the Purchased Items to Chino Valley. Any such loss, injury, or destruction prior to delivery shall not release Vendor from any obligation owed hereunder.

3. Delivered Service Ready: The Purchased Items shall be delivered ready to be put into intended service.

4. Delivery Acceptance: The Purchased Items shall be delivered to Customer on or before November 10th, 2016. Prior to acceptance of the Purchased Items and payment of the invoice, Customer shall inspect the Purchased Items to confirm compliance with the requested Purchased Items specifications. The inspection may include testing where the nature of the Purchased Items cannot be adequately determined otherwise. The cost of testing shall be borne by Chino Valley, except where the goods are nonconforming. In such case, Chino Valley may recover the reasonable cost of inspection and testing from Vendor as part of its incidental damage caused by Vendor's breach.

5. Patent and Royalty Rights: Vendor agrees to defend Chino Valley at Vendor's own expense, in all suits, actions or proceedings in which Chino Valley is made a defendant for actual or alleged infringement of any United States of America or foreign patent resulting from Customer's use of the goods purchased from the Vendor. Vendor further agrees to pay and discharge any and all judgments or decrees that may be rendered in any such suit, action or proceedings against the Vendor. Vendor agrees to indemnify and hold harmless Customer from any and all royalty and proprietary licenses, fees or costs, including legal costs, which may arise out of Customer's purchase and use of Purchased Items supplied by Vendor. It is expressly agreed by Vendor that these patent and royalty covenants are irrevocable and perpetual.

6. Applicable Law: This Contract shall be governed by the laws of the State of Arizona without regard to any choice of law provisions thereof.

7. Compliance with Laws:

(a) Vendor represents that all goods and services, delivered pursuant to the Contract will be produced and supplied in compliance with all applicable state and federal laws and regulations, including the requirements of the Fair Labor Standards Act of 1938, as amended.

(b) Vendor shall be responsible for compliance with any federal, state and local laws and regulations applicable to its installation of the Purchased Items furnished hereunder, and will obtain any permits required for such installation.

8. Assignment: This Contract may not be assigned by Vendor without the prior written consent of Chino Valley, and any assignment without such consent shall be null and void.

9. Attorneys' Fees: If any action at or in equity is necessary to enforce the terms of this Contract, the prevailing party shall be entitled to reasonable attorney, accountant and other professional fees, costs and expenses in addition to any other relief to which such prevailing party may be entitled.

10. Termination for failure to Budget: If funds for this Contract are not appropriated or budgeted by July 1, 2016, Chino Valley may terminate this contract by giving written notice to Vendor.

11. Entire Agreement: This Agreement (which includes the General Conditions, Purchased Items Specifications and Design Standards and Vendor's bid) constitutes the entire agreement between the parties, and any oral representations or terms set forth in a separate acceptance form or delivery slip shall not alter the terms and conditions of this Agreement.

Dated the year and date set forth above.

TOWN OF CHINO VALLEY

_____
Chris Marley, Mayor

VENDOR
Kubota Membrane USA Corporation

By
Its: _____
Authorized Representative

ATTEST:

_____
Jami Lewis, Town Clerk

APPROVED AS TO FORM:

_____
Phyllis L.N. Smiley, Town Attorney

For Earth, For Life

Kubota

ORIGINAL

Bid Proposal for

Replacement Membrane Cartridge Filters for the Town of Chino Valley

Kubota

Membrane Bioreactor System

Submitted To:

Town of Chino Valley Public Works Office

1982 Voss Drive

Chino Valley, Arizona 86323

Prepared by:

Kubota Membrane USA Corporation

11807 North Creek Parkway S., Suite B-109

Bothell, WA 98011

425-898-2858

Local Representation By:

Goble Sampson Associates

Josh Ziembiec

480-271-0519

jziembiec@goblesampson.com

For Earth, For Life
Kubota

July 22, 2016

Chris Bartels, Public Works Manager
Town of Chino Valley
1982 Voss Drive
Chino Valley, AZ 86323

Dear Mr. Chris Bartels:

We are pleased to present the attached materials for consideration regarding the replacement membrane cartridge filters project at the Kubota MBR Wastewater Treatment Facility for Chino Valley, AZ. Kubota Membrane USA is a company with a strong history in the U.S., backed by Kubota Corporation's extensive wastewater experience worldwide.

A compelling feature of the Kubota MBR System is the simplicity of daily operations and periodical maintenance. Both the membrane unit itself and the MBR system are designed for the operator's convenience. Kubota will provide the specified supplies and will support the Chino Valley WWTF for the lifetime of the treatment facility.

Kubota Membrane USA offers first class service. Our technicians are well trained in wastewater analysis and membrane inspection based on operational experience. This sets us apart from other membrane manufacturers who do not design, build, or operate treatment plants, and system integrators who do not manufacture parts or operate plants. We are responsive to operator concerns and knowledgeable about the Kubota MBR System from top to bottom.

With the Kubota name comes a long history of excellence in MBR wastewater treatment. We are happy to put you in touch with operators and engineers who can share their experience with our product. If you have any questions regarding our proposal, please feel free to contact us or our local representative, **Josh Ziembiec** of Goble Sampson Associates, at **480-271-0519** or **jziembiec@goblesampson.com**.

Best regards,

Kenna Foster, EIT
Application Engineer | KUBOTA Membrane USA Corporation

Tel: 425-898-2858 ext. 108
Cell: 425-686-2705
Email: kenna.foster@kubota.com

For Earth, For Life
Kubota

TABLE OF CONTENTS

Section	Tab Number
Bidder's Bid and Price Proposal	1
Authorized Signature Form	2
Additional Information	3
Appendix A – Technical Specifications	4
Appendix B – References	5

For Earth, For Life
Kubota

Bidder's Bid – Pricing Form

Item #	Description	Quantity	Unit	Unit Price	Amount
1	Membrane Cartridge Type 510	40	100/box	$6,300.00	$252,000.00
2	Tube 500L	4000	Each	$2.00	$8,000.00
3	Retaining Rubber S50R	160	Each	$9.00	$1,440.00
4	Permeate Manifold	20	Each	$450.00	$9,000.00
5	Flange 65A	20	Each	$15.00	$300.00
6	Cap 65A	20	Each	$30.00	$600.00
7	Membrane Case MS200 Upper Membrane Cassette	1	Each	$15,000.00	$15,000.00
8	Membrane Case MK200 Lower Membrane Cassette	1	Each	$16,500.00	$16,500.00
9	Freight	1	Each	$6,000.00	$6,000.00
Total Bid Amount					*$308,840.00*

Kubota Membrane USA Corporation 2016

IV. BIDDER'S BID

4.1 Bidder's Bid: For the bid opening July 25th, 2016 for supplies.

4.2 Conditions Accepted: The undersigned Bidder declares that before preparing this bid, he or she has read the Bid Documents carefully, and that this bid is made with full knowledge of the kind, quality and quantity of supplies to be furnished by signing this bid. Bidder agrees to all conditions contained in the Bid Documents.

4.3 Bid Price: Kubota membrane cartridge filters type 510 and accessory equipment which includes: header tubing, retaining rubber S50R, Permeate manifold S200R, flanges and caps for the Kubota MBR wastewater treatment facility

Instructions for Bidders:

All Bid Prices shall include all freight, insurance, warranty costs, taxes and fees chargeable to the Town of Chino Valley and F.O.B Destination. prepaid to 2190 Rodeo Drive, Chino Valley, AZ 86323

Bidder will be responsible for and shall pay all sales, consumer, use, and other taxes. When equipment, materials or supplies generally taxable to the Bidder are eligible for a tax exemption, credit or deduction due to the nature of the item, at Bidder's request, Chino Valley will assist Bidder in applying for and obtaining the same.

The quantities listed are estimates only, and Chino Valley does not guarantee the stated quantities will be purchased. Chino Valley reserves the right to add or subtract from the stated quantities.

This is not an exclusive contract, Chino Valley reserves the right to purchase the same or similar supplies from other vendors.

4.4 Not Applicable.

4.5 Location of Parts and Service: State the location where parts and service will be available to Chino Valley for these supplies.

11807 North Creek Parkway S., Suite B-109, Bothell, WA 98011.
(Address)

425-898-2858.
(Phone No.)

4.6 Guaranteed Delivery Time and Penalty: As part of this Bid, the Bidder shall give a guaranteed delivery time for the supplies to Chino Valley after Chino Valley places the

purchase order. Each and every calendar day that delivery is delayed, Chino Valley may deduct from the monies due or to become due to the Successful Bidder. The amount shall be the sum $0 per calendar day, commencing on the day after the guaranteed day listed above. The total sum is not as a forfeit or penalty, but is for liquidated damages. This sum is fixed and agreed upon since the actual damage to Chino Valley and to the public is impossible or very difficult to determine. Delivery delays caused by Acts of God will be allowed and other causes beyond the Bidder's control may be allowed.

The Bidder's guaranteed delivery time is 90 days from issuance of the purchase order per the conditions above.

4.7 Contract Acceptance: Bidder proposes and agrees that if this bid is accepted, he or she will enter into a contract with Chino Valley within seven (7) days after Chino Valley's acceptance of this bid at the listed scheduled price.

4.8 Affidavit: The following affidavit is submitted by the Bidder as part of this bid:

The State of Arizona)
) ss.
Yavapai County)

The undersigned deponent, of lawful age, being duly sworn upon his oath, deposes and says:

1. That he/she has lawful authority to execute the within and foregoing Bidder's bid;
2. That Bidder has not directly or indirectly entered into any agreement, express or implied, with any Bidder or Bidders, having for its object the controlling of the price or amount of such bid or bids, the limiting of the bids or the Bidders, the parceling out to any Bidder or any other person of any part of the contract or any part of the subject matter of the bid or bids or of the profits thereof, and that he/she has not and will not divulge the sealed bid to any other person whatsoever, except those having a partnership or financial interest with him and said Bidder, until after the sealed bid or bids are open.
3. That Bidder has received any Addenda issued.

T. MOTOHORI
Name
President
Title

SUBSCRIBED AND SWORN TO BEFORE ME this 15 day of JULY, 2016,

by TOSHIHIKO MOTOHORI

Notary Public

My Commission Expires June 10, 2020

DANIEL J EMMONS
Notary Public
State of Washington
My Appointment Expires Jun 10, 2020

PLS:pls 2693852.2 6/7/2016

TOWN OF CHINO VALLEY, ARIZONA

AUTHORIZED SIGNATURE FORM

Contract Name:

WHEREAS, Kubota Membrane USA Corporation, an Washington corporation, is required to execute certain documents which are necessary for the prompt and efficient execution of the corporate business;

NOW, THEREFORE, BE IT RESOLVED, by the Board of Directors of the

Kubota Membrane USA Corporation (Corporate Name) that Toshihiko Motohori (Name of Parties Authorized)

is/are authorized to execute and sign on behalf of said corporation/company the following documents:

1. The CONTRACT
2. The Bond
3. Payrolls
4. Claims
5. CHANGE ORDERS
6. All other papers necessary for the conduct of the corporation's affairs and the execution of the Contract.

The above-named person is granted the authority and duties herein referenced for the duration of the CONTRACT for this PROJECT or until express notice of revocation has been duly given in writing, whichever is the lesser period.

DATED and passed by the Board of Directors this 15th day of July, 20 16.

President

(Signature of Persons Authorized to Sign) (Title) (Document No.)

A. CERTIFICATE

STATE OF Washington)
) ss.
County of King)

PLS:pls 2693852.2 6/7/2016

I, president of the Kubota Membrane USA corporation, do hereby certify that the above is a true and correct copy of a resolution adopted by the Board of Directors of said corporation, at a meeting of said Board held on 7/15, 2016, and that the same is in full force and effect at this time.

DATED 7/15, 2016.

(Officer of Corporation)

(Seal of Corporation)

STATE OF WA)
) ss.
County of KING)

This instrument was acknowledged before me this 15TH day of JULY, 2016 by TOSHIHIKO MOTOHORI, appearing before the undersigned Notary Public, and stated that he executed such instrument on behalf of said corporation for the purpose and consideration therein expressed.

Notary Public

My Commission Expires:

June 10, 2020

DANIEL J EMMONS
Notary Public
State of Washington
My Appointment Expires Jun 10, 2020

PLS:pls 2693852.2 6/7/2016

Additional Content

Payment Terms

Kubota is proposing the following payment terms for the Chino Valley Membrane Replacement Project:

Activity	Payment Percentage
Receipt of Purchase Order	70%
Equipment Delivery	20%
Equipment Installation and Startup	10%

Descriptive Literature

All of Kubota's proposed products completely comply with the Specifications and Design Standards described in the Bid Documents. No deviations and/or modifications are needed to meet the Specification and Design Standards. Technical specifications for Kubota's H6A-510 Membrane Cartridge and EK400 Membrane Unit, which is comprised of an upper membrane case (MS200), a lower membrane case (MK200) (upper membrane case), and a diffuser case, can be found in Appendix A of this proposal.

Listed below is the contact information for Upper Sweetwater WWTP and Bandon Dunes WWTP, both of which have been operating using Kubota membranes for over ten (10) years without replacing the membranes.

Upper Sweetwater WWTP

Location: Villa Rica, GA

Commission Date: June 2005

Contact: Russell Kelly

Phone: 678-224-4082

Email: rkelly@paulding.gov

Bandon Dunes WWTP

Location: Bandon, OR

Commission Date: June 2002

Contact: Warren Felton

Phone: 541-347-5751

Email: wfelton@bandondunesgolf.com

Brief Description of Bidder

Kubota Membrane USA Corporation is a subsidiary of Kubota Corporation. Kubota Corporation has been designing and building wastewater treatment plants since the early 1960s. Long before building wastewater treatment plants, the company became involved with water engineering projects in 1893 as a manufacturer of iron piping, which was used for clean water distribution. As the largest engineering

Kubota Membrane USA Corporation 2016

contractor for wastewater treatment plants in Japan, Kubota has the capability to design, build and operate municipal and industrial wastewater treatment plants.

Kubota also just began operating a Research and Development (R&D) Center in Canton, OH. This center has a wastewater treatment facility with capacity to treat 60,000 gallons per day, and will also be a resource available to our clients.

Address: 11087 North Creek Parkway S., Suite B-109, Bothell, WA 98011

Phone: 425-898-2858

Fax: 425-898-2853

E-mail: kenna.foster@kubota.com

Tax ID Number

Kubota Membrane USA Corporation's Federal Tax Identification Number is 20-2298790.

Licenses

Kubota Membrane USA Corporation has no applicable licenses in the state of Arizona.

Disclosure

Kubota Membrane USA has not been debarred, suspended, or otherwise lawfully precluded from participating in any procurement activity.

Training

Kubota is offering the following training and services:

24/7 Technical Support (Always Free of Charge)

24/7 phone support is available in addition to support during regular business hours. 24-hour technical support calls are shared within the Kubota staff so that you can rest assured knowing that knowledgeable engineers and technicians are just a phone call away.

Annual Operator Workshop (No Additional Charge)

Kubota Membrane USA will host an annual operator workshop where operators can meet to exchange ideas and find out about the latest developments in MBR technology. Kubota covers the cost of these workshops and associated food and lodging.

Kubota Membrane USA Corporation 2016

Kubota's Operator Workshop in August 2015 was held in the state of Georgia and included a tour of the James Creek WRF.

Figure 1: Kubota's Operator Workshop in August 2015 in Georgia

Research and Development Center in Canton, Ohio

At our new Research and Development Center in Canton, OH, Kubota is operating a fully functional 60,000 gallon per day plant designed to test new membrane technologies, optimize existing technologies, and provide opportunities for plant operators to visit and learn new techniques for running our systems. This resource will be available to all of our clients on an as-needed basis.

Suppliers

Kubota will be the supplier of all materials provided.

Financial Statement

Available upon request.

Kubota Membrane USA Corporation 2016

For Earth, For Life
Kubota

TECHNICAL SPECIFICATION

KUBOTA H6A-510 MEMBRANE CARTRIDGE

GJS-14-015-0_EN

Specifications of Membrane Cartridges for KUBOTA Submerged Membrane Unit™

● Specification of Product

Item Name		Membrane Cartridge (type H6A)
Model		H-510
Dimensions (Height x Width x Thickness)		H1,020mm × W490mm × T6mm
Dry Mass		3.2 kg
Membrane Sheet	Classification	Microfiltration (MF) Membrane
	Nominal Pore Size	0.4 μm (average 0.2 μm)
Effective Membrane Area		0.8 m^2
Initial Flow Rate with Clean Water*1		930 mL/min or more (at 20°C, 5 kPa)
Usage Conditions*2	Intended Use	Solid-Liquid Separation of Activated Sludge
	Filtration Pressure	20 kPa or less
	Water Temperature	5 ~ 40 °C
	pH	1 ~ 10
Chemicals for cleaning*3	Sodium Hypochlorite	1.0 % or less
	Oxalic Acid*4	1.0 % or less
Optional parts		Hand Hook
(These parts shall be ordered separately)		Tube
Precaution in Storage		Avoid direct sunlight and wetness
		Keep fire away

*1 This indicates the performance of a Membrane Cartridge alone. For the performance as a Membrane Unit, refer to "Specifications of KUBOTA Submerged Membrane Unit™".

*2 While these indicate the conditions of a Membrane Cartridge alone, always use it in KUBOTA Submerged Membrane Unit™. For the conditions as a Membrane Unit, refer to "Specifications of KUBOTA Submerged Membrane Unit™".

*3 These indicate the allowable concentration for a Membrane Cartridge alone. When conducting a Chemical Cleaning as a Membrane Unit, refer to "Specifications of KUBOTA Submerged Membrane Unit™".

*4 If calcium carbonate precipitates in the tank, dose hydrochloric acid (2% or less) or citric acid (0.5~1% or less).

[Before using this product, read "Instruction Manual for KUBOTA Submerged Membrane Unit™".]

For Earth, For Life
Kubota

TECHNICAL SPECIFICATION

KUBOTA EK400 SUBMERGED MEMBRANE UNIT

[1/2]

GJS-14-004-0_EN

Specifications of KUBOTA Submerged Membrane Unit™

●Specifications of Product

Model			EK400R2.2
Dimensions (Height x Width x Length)			H3,506 mm × W2,921 mm × L620 mm
Mass	Upper Membrane Case	Dry Mass	830 kg
		Wet Mass*1	1,630 kg
	Lower Membrane Case	Dry Mass	900 kg
		Wet Mass*1	1,700 kg
	Diffuser Case		120 kg
	Lifting Tool*2		110 kg
	Total Maximum of Lifted Membrane Case*1		1,810 kg
Number of Membrane Cartridges			400 cartridges
Effective Membrane Surface Area			320 m^2
Nominal (Maximum) Pore Diameter of Membrane Sheet			0.4 μm (average 0.2 μm)
Initial Flow Rate with Clean Water*3			296 L/min (at 20°C, 5 kPa)
Diffuser Air Supply Rate		Required	2.80 m^3/min
		Maximum	4.00 m^3/min
Pressure Loss in Diffuser			1 kPa or less
Filtration Pressure*4			20 kPa or less
Chemical Injection Pressure		Constant	10 kPa or less
		Instantaneous	20 kPa or less
Diameter of Pipe Connection		Air	JIS VP75 or equivalent
		Permeate	JIS VP65 or equivalent
Periodical Replacement Parts			Retaining Rubber (every three years)
			Tube (every three years)
			Membrane Cartridge (depending on usage conditions)
Optional Parts *(These parts shall be ordered separately)*			Guide Set
			Lifting Tool
			Hand Hook
			Hanger Ring Set
Precautions in Storage			Avoid direct sunlight and wetness
			Keep fire away

*1 Assuming that all the gaps between the Membrane Cartridges are clogged.

*2 Optional part

*3 This does not indicate the treatment capacity with real mixed liquor.

*4 Difference (P1-P2) between the pressures while filtration is OFF (P1) and ON (P2)

[2/2]

● Design Considerations

Usage Conditions	Intended Use*5		Solid-Liquid Separation of Activated Sludge
	Filtration Method		Suction Filtration
	Water Temperature		5 ~ 40 °C
	pH		5 ~ 10
	Required Minimum Water Level (from the base of Diffuser Case)		4,000 mm
	Sludge Properties*6 (recommended)	MLSS	5,000 ~ 20,000 mg/L
		Viscosity	100 mPa·s or less
		Paper Filtration Test	10 mL/5min or more
		DO	1 mg/L or more
		Temperature	15 ~ 35 °C
		pH	6 ~ 8
Method of Fixation	Diffuser Case		Anchor Bolts (M16×230L, depth 130mm)
	Membrane Case		Guide Set
Ancillary Equipment *(to be provided by Customer)*			
	Membrane Blower		
	Diffuser Cleaning Valve		
	Devices to discharge Permeate		
		Suction Filtration	Suction Pump, Pressure Gauge (Negative or Combination Gauge), Constant Flow Valve (or Flow Regulator + Flow Meter)
	Chemical Injection Port or Equipment		
	Recommended Piping Diameter	Blower	JIS VP75 or equivalent
		Diffuser Cleaning	JIS VP75 or equivalent
		Permeate*7	JIS VP65 or equivalent
Precautions in Operation			Avoid aeration while filtration stops as much as possible.
			Stop filtration while aeration stops or Diffuser is cleaned.

*5 Pretreatment may be required for the following types of wastewater:

- Wastewater with oil, trash, or debris
- Wastewater with high contents of iron, manganese, calcium, or silicon

*6 Use these values as rough targets for treatment control.

*7 Design the system so as to prevent permeate backflow and air trap while filtration stops.

● Maintenance Considerations

In Situ Chemical Cleaning	Chemical type	Sodium Hypochlorite	0.6% or less when MLSS is more than 10,000mg/L
			0.3% or less when MLSS is 10,000mg/L or less
		Oxalic Acid*8	0.5 ~ 1.0 % or less
	Dosage Volume		1,200 L
	Timing		When filtration pressure rises by 5 ~ 10kPa from the initial or every six months or more often
Diffuser Cleaning	Manual		Every two weeks or more often, for five minutes
	Automatic		Once a day, for five minutes

*8 If calcium carbonate precipitates in the tank, dose hydrochloric acid (less than 2.0%) or citric acid (less than 1.0%).

[Read the Instruction Manual for KUBOTA Submerged Membrane Unit™ before using this product.]

For Earth, For Life
Kubota

REFERENCE #1

McFARLAND CREEK WWTP

For Earth, For Life
Kubota

Similar Projects
(Use Separate Sheets as needed)

Similar Project #1

BIDDER: Kubota Membrane USA
(Bidder's name)

a. Name of Similar Project #1: McFarland Creek WWTP

b. Contracting Party (Owner):
Name: Geauga County.
Address: 17630 Chagrin River Rd, Chagrin Falls, OH 44023
Telephone Number: (440) 247-7284

c. If Joint Venture, names of each participant:

d. Contract Price: $1,743,354

e. Description of Similar Project #3: Kubota Membrane USA provided the original ES200 Submerged Membrane Units for this 1.8 MGD WWTP. In December 2015, Kubota Membrane USA replaced the ES200 units with RM200 units. Also included in this Contract was all labor required for the membrane unit replacement.
(Briefly describe here, and attach a copy of the description in the Contract. Technical specifications may be requested by CONTRACTOR.)

f. Construction Manager(s) during the Similar Project #3:
Name: Gary Sipe with Johnson Controls Inc.
Address: 1044 Meridian Rd Suite A, Youngstown, OH 44509
Telephone Number: (330) 565-7530

g. Start date (notice to proceed issued): 10/07/2015

h. Completion date provided for in the Contract: 12/17/2015

i. Substantial completion date (approved by Owner): 12/16/2015

j. Reasons why work was completed early, or why delays occurred:
N/A

Kubota Membrane USA Corporation 2016

k. Final price paid by Owner for the Similar Project #1: $1,743,354

l. If final price was 10% less or more than the original Contract Price, describe why:
N/A

m. Describe any large cost over-runs (claims in excess of $_____) disputed or contested by the owner, the reason for the dispute, and ultimate resolution of the dispute:
N/A

n. Did Owner file a lawsuit against Bidder concerning performance?
Yes_____ No X_____ If so, what was the result?_____

o. Following final payment on the Similar Project, has Bidder voluntarily or otherwise provided any additional work or repairs, or made any payments to the Owner to cure defects or fulfill warranties made to the Owner concerning the quality of the performance/or the work involved in the Similar Project? Describe:
N/A

p. Has your company undergone a major change in ownership, management, size, or expertise since the time of this Similar Project? Yes_____ No X___ Describe:

All answers should be complete and informative. Attach additional sheets if needed to give a full answer. Town may, in its discretion, request Bidder to provide additional information concerning this Similar Project as part of its evaluation of the responsibility of the Bidder prior to award of the Contract

Kubota Membrane USA Corporation 2016

For Earth, For Life
Kubota

REFERENCE #2

NASSAU REGIONAL WWTP

For Earth, For Life
Kubota

Similar Projects
(Use Separate Sheets as needed)

Similar Project #2

BIDDER: Kubota Membrane USA
(Bidder's name)

a. Name of Similar Project #2: Nassau Regional WWTP

b. Contracting Party (Owner):
Name: JEA
Address: 1840 Cedar Bay Road Jacksonville, FL, 33218
Telephone Number: (904) 665-7916

c. If Joint Venture, names of each participant:

d. Contract Price: $393,960

e. Description of Similar Project #2: This project included the purchase of membrane cartridge H6A-510, retaining rubber, and tube.
(Briefly describe here, and attach a copy of the description in the Contract. Technical specifications may be requested by CONTRACTOR.)

f. Construction Manager(s) during the Similar Project #3:
Name: N/A
Address:
Telephone Number: ( )

g. Start date (notice to proceed issued): 01/26/2016

h. Completion date provided for in the Contract: 04/12/2016

i. Substantial completion date (approved by Owner): 04/04/2016

j. Reasons why work was completed early, or why delays occurred:
Membrane shipment was on schedule. Owner accepted membranes to be delivered 1 week prior to ETA specified in the Contract.

Kubota Membrane USA Corporation 2016

k. Final price paid by Owner for the Similar Project #2: $393,960

l. If final price was 10% less or more than the original Contract Price, describe why:
N/A

m. Describe any large cost over-runs (claims in excess of $_____) disputed or contested by the owner, the reason for the dispute, and ultimate resolution of the dispute:
N/A

n. Did Owner file a lawsuit against Bidder concerning performance?
Yes_____ No X_____ If so, what was the result?_____

o. Following final payment on the Similar Project, has Bidder voluntarily or otherwise provided any additional work or repairs, or made any payments to the Owner to cure defects or fulfill warranties made to the Owner concerning the quality of the performance/or the work involved in the Similar Project? Describe:
N/A

p. Has your company undergone a major change in ownership, management, size, or expertise since the time of this Similar Project? Yes_____ No X___ Describe:

All answers should be complete and informative. Attach additional sheets if needed to give a full answer. Town may, in its discretion, request Bidder to provide additional information concerning this Similar Project as part of its evaluation of the responsibility of the Bidder prior to award of the Contract

Kubota Membrane USA Corporation 2016

For Earth, For Life
Kubota

REFERENCE #3

NORFOLK WWTP

For Earth, For Life
Kubota

Similar Projects
(Use Separate Sheets as needed)

Similar Project #3

BIDDER: Kubota Membrane USA
(Bidder's name)

a. Name of Similar Project #3: Norfolk WWTP

b. Contracting Party (Owner):
Name: Massachusetts Department of Correction
Address: 50 Maple Street, Milford, MA 01757
Telephone Number: (508) 422-3300

c. If Joint Venture, names of each participant:

d. Contract Price: $211,300

e. Description of Similar Project #2: This project included the purchase of Type 515 membrane cartridges and upper and lower membrane modules for RW300 units.
(Briefly describe here, and attach a copy of the description in the Contract. Technical specifications may be requested by CONTRACTOR.)

f. Construction Manager(s) during the Similar Project #3:
Name: N/A
Address:
Telephone Number: ( )

g. Start date (notice to proceed issued): 02/22/2016

h. Completion date provided for in the Contract: 05/30/2016

i. Substantial completion date (approved by Owner): 05/30/2016

j. Reasons why work was completed early, or why delays occurred:
N/A

Kubota Membrane USA Corporation 2016

k. Final price paid by Owner for the Similar Project #3: $211,300

l. If final price was 10% less or more than the original Contract Price, describe why:
N/A

m. Describe any large cost over-runs (claims in excess of $_____) disputed or contested by the owner, the reason for the dispute, and ultimate resolution of the dispute:
N/A

n. Did Owner file a lawsuit against Bidder concerning performance?
Yes_____ No X_____ If so, what was the result?_____

o. Following final payment on the Similar Project, has Bidder voluntarily or otherwise provided any additional work or repairs, or made any payments to the Owner to cure defects or fulfill warranties made to the Owner concerning the quality of the performance/or the work involved in the Similar Project? Describe:
N/A

p. Has your company undergone a major change in ownership, management, size, or expertise since the time of this Similar Project? Yes_____ No X___ Describe:

All answers should be complete and informative. Attach additional sheets if needed to give a full answer. Town may, in its discretion, request Bidder to provide additional information concerning this Similar Project as part of its evaluation of the responsibility of the Bidder prior to award of the Contract

Kubota Membrane USA Corporation 2016

THIS PAGE INTENTIONALLY LEFT BLANK

TOWN OF CHINO VALLEY
COUNCIL AGENDA ITEM STAFF REPORT

Town Council Regular Meeting **Item No. 7. a.**

Meeting Date:	08/09/2016
Contact Person:	Phyllis Smiley, Town Attorney
Department:	Town Attorney
Item Type:	Action Item
Estimated length of staff presentation:	5 minutes
Physical location of item:	n/a

AGENDA ITEM TITLE:

Consideration and possible action to approve Resolution No. 16-1089 approving a guaranteed energy cost savings program and agreements with Climatec, LLC for purchase and installation of improvements to Town facilities for the purpose of reducing energy costs and to measure and verify the savings after the installation is complete. (Phyllis Smiley, Town Attorney)

RECOMMENDED ACTION:

Approve Resolution No. 16-1089, to approve a guaranteed energy cost saving program and the following agreements with Climatec LLC:

(i) Installation Agreement in the amount of $606,135.00, and

(ii) Measurement and Verification Agreement in the amount of $4500 per year for the first 3 years. (If the Town chooses to extend the Measurement and Verification Agreement, the per year cost will escalate by 4% annually for every subsequent year after the third year, for a maximum term of 15 years. Staff does not recommend extension of the Measurement and Verification Agreement)

SITUATION AND ANALYSIS:

Issue Statement:

The Town of Chino Valley's energy costs are high and in need of economizing. Cost-saving measures are necessary to allow the Town to use its funds on services that more directly benefit the citizens of Chino Valley and the public in general.

Applicable "Policy"

A.R.S. Section 34-105, authorizing municipalities to enter into a guaranteed energy cost savings contract with a qualified provider provided the amount spent on the energy cost savings measures recommended in the proposal does not exceed the amount to be saved in energy costs over the expected life of the equipment.

Satisfaction of "Policy"

Summary of Issues and Staff Rationale

In order to reduce the Town's energy costs and take advantage of the programs as authorized by ARS 34-105, Staff, with direction from Council, entered into negotiations with Climatec, LLC to create an energy savings program consisting of replacement installation of lighting, HVAC, and other Town electrical equipment, as noted in the attachments to the Installation Agreement for a cost to the Town of $606,135.00. It is anticipated that the installation of the equipment will be completed by December 31, 2016.

Once the installation is complete, the measurement and verification of energy use will commence pursuant to the Measurement and Verification Agreement. For a cost to the Town of $4,500 per year, Climatec will measure and verify the energy savings associated with the installation of the new and replacement equipment. It is anticipated that the energy savings over the 15 year term of the agreement will more than cover the cost of the installation of the new and replacement equipment. If this is not the case, Climatec has committed to pay the difference.

The Town Attorney reviewed the Agreements and recommended revisions with which Climatec agreed.

Findings of Fact

Other Pertinent Documents Available Upon Request:

Climatec Installation Agreement, Attachment "D" - Due to the size of Attachment "D," it is not included in this packet, but it will be included with the online version as a separate document. See http://www.chinoaz.net/AgendaCenter. A printed copy is available for viewing in the Town Clerk's/Town Council Office.

Fiscal Impact

Fiscal Impact?:	yes
If Yes, Budget Code:	not sure
Available:	yes
Funding Source:	

Attachments

Resolution 16-1089

Climatec Installation Agreement, without Attachment D

Climatec Measurement & Verification Agreement

RESOLUTION NO. 16-1089

A RESOLUTION OF THE MAYOR AND COMMON COUNCIL OF THE TOWN OF CHINO VALLEY, COUNTY OF YAVAPAI, ARIZONA, TO APPROVE A GUARANTEED ENERGY COST SAVINGS PROGRAM AND ASSOCIATED AGREEMENTS WITH CLIMATEC TO UNDERTAKE IMPROVEMENTS TO THE TOWN'S FACILITIES FOR REDUCING ENERGY CONSUMPTION COSTS AND TO MEASURE AND VERIFY THE SAVINGS AFTER THE INSTALLATION IS COMPLETE; PROVIDING FOR REPEAL OF CONFLICTING RESOLUTIONS; AND PROVIDING FOR SEVERABILITY

WHEREAS, the Town Council of the Town of Chino Valley seeks to improve Town facilities and reduce the Town's energy consumption costs; and

WHEREAS, the Town Council directed the Staff to work with Climatec LLC Energy Group ("Climatec") to develop a plan for improvements to the Town facilities and reduce energy costs to the Town; and

WHEREAS, Climatec examined Town facilities and presented to the Town Council a project plan that both improves facilities and reduces energy costs; and

WHEREAS, pursuant to A.R.S. § 34-105, the State of Arizona authorizes municipalities to enter into a guaranteed energy cost savings contract with a qualified provider provided the amount spent on the energy cost savings measures recommended in the proposal does not exceed the amount to be saved in energy costs over the expected life of the equipment; and

WHEREAS, the Town of Chino Valley Town Council has determined that the amount the Town would spend on the energy cost savings measures recommended in the proposal from Climatec will not exceed the amount to be saved in energy costs over the expected life, according to the manufacturer's equipment standards, of the energy cost savings measures implemented, the term of the financial agreement, or twenty-five years, whichever is shortest, after the date that the installation or implementation is complete, if the recommendations of the proposal are followed; and

WHEREAS, the Town Council has determined that Climatec's proposed project, as set forth in the proposed Installation Agreement and Measurement and Verification Agreement meets the criteria for the project,

NOW, THEREFORE, BE IT RESOLVED by the Mayor and Common Council of the Town of Chino Valley, County of Yavapai, Arizona, that

1. The Energy Cost Savings Program and associated Climatec Installation Agreement for Town of Chino Valley and Climatec Measurement and Verification Agreement for Town of Chino Valley are hereby approved; and

2. The Mayor is authorized to execute the Agreements; and

3. The Town Manager is authorized to execute and deliver any and all documents necessary or advisable in order to complete the transactions contemplated under the Agreements; and

4. That funds for the purchase of the energy cost savings equipment and facilities in the amount of $606,135.00 shall be obtained from Zion Bank, N.A. under a separately negotiated contract.

BE IT FURTHER RESOLVED that all resolutions or parts of resolutions in conflict with the provisions of this resolution are hereby repealed.

BE IT FURTHER RESOLVED that if any section, subsection, sentence, clause, phrase or portion of this Resolution is for any reason held to be invalid or unconstitutional by the decision of any court of competent jurisdiction, such decision shall not affect the validity of the remaining portions thereof.

PASSED AND ADOPTED by the Mayor and Common Council of the Town of Chino Valley, Arizona this 9th day of August, 2016.

_____
Chris Marley, Mayor

ATTEST:

_____
Jami C. Lewis, Town Clerk

APPROVED AS TO FORM:

_____
Phyllis L.N. Smiley, Town Attorney

I hereby certify the above foregoing Resolution No. 16-1089 was duly passed by the Council of the Town of Chino Valley, Arizona, at a regular meeting held on August 9, 2016, and that quorum was present thereat and that the vote thereon was ____ ayes and ____ nays and ____ abstentions. ____ Council members were absent or excused.

_____
Jami C. Lewis, Town Clerk

The following exhibits are attached hereto and incorporated herein:
1. Climatec Installation Agreement for Town of Chino Valley
2. Climatec Measurement and Verification Agreement for Town of Chino Valley

INSTALLATION AGREEMENT FOR Town of Chino Valley

TERMS AND CONDITIONS

ATTACHMENTS

Attachment "A" – Scope of Work

Attachment "B" - Lighting Summary

Attachment "C" – Mechanical Equipment Schedule

Attachment "D" – Technical Appendix

Attachment "E" – Form of Change Order

CLIMATEC INSTALLATION AGREEMENT

This Installation Agreement ("Agreement") dated July 21, 2016 ("Effective Date") is made by and between:

Town of Chino Valley, AZ
("Purchaser") with its principal place of business at
202 N. State Route 89, Chino Valley, AZ 86323
and

Climatec LLC
With its principal place of business at
2851 W. Kathleen Rd., Phoenix, AZ 85053

Purchaser and Climatec LLC agree as follows:

1. **INSTALLATION.** Climatec LLC shall provide Purchaser with an Energy Efficiency Program, as identified in **Attachment(s) A, B, C, and D,** and incorporated herein by reference (hereinafter referred to as the "Work") at the total fixed price of $606,135.00 including required taxes and Performance Bond (if requested) (the "Contract Amount").

   Climatec LLC is responsible for the design, engineering, permits, fees, approvals, project management, installation, startup, training, checkout, warranty, and insurance specifically associated with the Work to be performed. Climatec LLC is not responsible for any equipment, systems, controls, comfort problems, balancing, duct cleaning, existing deficient conditions, etc. not specifically included in this Agreement. Climatec LLC will provide submittals and engineered drawings (if required), for Purchaser's technical review and written approval, prior to initiating construction. All construction and associated cleanup shall be performed and scheduled so as to minimize any disruption with any ongoing Purchaser activities. Climatec LLC requires all underground conduits between buildings to be clear of obstruction, of sufficient size to accommodate new wire and cable, and easily accessible. The Purchaser is responsible for Ethernet drops at each location for Energy Management System communication. This proposal offer is valid until October 20, 2016.

2. **SCOPE OF WORK.** Once this contract is executed by the Purchaser and Climatec LLC, Climatec LLC may not revise the contract in any way except by mutual agreement with the Purchaser.

   The repair, updating, replacing of any existing customer components or systems is excluded from this contract unless specifically detailed in the scope. Climatec will notify the owner of any existing deficiencies found and if requested, may provide repair or replacement services as a separate item if requested. This agreement is based upon the use of straight time labor only unless stated otherwise in this agreement. Purchaser agrees to provide Climatec LLC with required field utilities (electricity, toilets, drinking water, etc.) without charge. Climatec LLC agrees to keep the jobsite clean of debris arising out of its own operations. Purchaser shall not back charge Climatec LLC for any cost or expenses without Climatec LLC's written consent. Unless specifically noted in the statement of the scope of the work or services undertaken by Climatec LLC under this agreement, Climatec LLC's obligations under this agreement expressly exclude any work or service of any nature associated or connected with the identification, abatement, clean up, control, removal or disposal of environment Hazards or dangerous substances, to include but not to be limited to asbestos, PCBs, or mold discovered in or on the premises. Any language or provision of the agreement elsewhere contained which may authorize or empower the Purchaser to change, modify or alter the scope of work or services to be performed by Climatec LLC shall not operate to compel Climatec LLC to perform any work relating to Hazards without Climatec LLC's express written consent.

3. **INVOICING & PAYMENTS.** Climatec LLC may invoice the Purchaser for any equipment and/or materials installed at a job site. Purchaser agrees to pay Climatec LLC amounts invoiced upon receipt of invoice. Waivers of lien will be furnished upon request, as the work progresses; to the extent payments are received. If Climatec LLC's invoice is not paid within 30 days of its issuance, it is delinquent and Climatec LLC may add 1% per month interest onto delinquent amounts.

4. **INDEPENDENT CONTRACT.** It is agreed between Purchaser and Climatec LLC that Climatec LLC shall perform the Work as an independent contractor. Climatec LLC may use subcontractors to perform work hereunder, provided Climatec LLC shall fully pay said subcontractors and in all instances remain fully responsible for (a) the proper completion of this agreement and (b) supervising such subcontractor's work and for the quality of the work they produce.

5. **MATERIALS.** All materials shall be new, in compliance with all applicable laws and codes, and shall be covered by a manufacturer's warranty, if appropriate. If the materials or equipment included in this agreement become temporarily or permanently unavailable, the time for performance of the work shall be extended to the extent thereof, and in case of permanent unavailability, Climatec LLC shall (a) be excused from furnishing said materials or equipment, and (b) be reimbursed for the difference between the cost of the materials or equipment permanently unavailable and the cost of a reasonable substitute therefore.

6. **COMPLETION.** The work specified in Section 1 shall be considered completed upon approval by the Purchaser, provided that the Purchaser's approval shall not be unreasonably withheld.

7. **WARRANTY.** Climatec LLC warrants that the equipment and systems provided under this contract shall be free from defects in material and workmanship arising from normal usage for a period of one year from the date of beneficial use or eighteen months from delivery of said equipment or systems. Within the warranty period, if Purchaser provides written notice to Climatec LLC of any such defects within thirty (30) days after the appearance or discovery of such defect, Climatec LLC shall, at its option, repair or replace the defective equipment and return said equipment to Purchaser. All transportation charges incurred in connection with the warranty for equipment shall be borne by Purchaser, unless otherwise provided for in manufacturer warranties. These warranties do not extend to any equipment which has been repaired by others, abused, altered or misused, or which has not been properly and reasonably maintained. All transferrable manufacturer warranties associated with the equipment will be transferred to the Purchaser. These warranties are in lieu of all other warranties, expressed or implied, including but not limited to those of merchantability and fitness for a specific purpose.

8. **LIABILITY.** Climatec LLC shall not be liable for any special, indirect, or consequential damages arising in any manner from the equipment or material furnished or the work performed pursuant to this agreement.

9. **TAXES.** The price of this agreement includes duties, sale, use, excise or other similar taxes required by federal, state or local laws in effect at the time of agreement execution.

10. **REBATES, UTILITY INCENTIVES, AND GRANTS** Unless otherwise stated in the project scope-of-work, or cash flow analysis, any and all rebates, incentives, grants that are earned through the course of this project from public or private utilities, municipalities, development districts or state funding are 100% the property of Climatec LLC or their designee. The paperwork, inspections and verification required to collect these monies are the sole responsibility of Climatec LLC. The customer agrees to assist Climatec LLC where required by the jurisdiction in the form of data required for the application and authorizing signatures. In the event the Customer incurs expenses related to the processing of the applications, Climatec LLC shall reimburse these direct costs.

11. **TAX CREDITS, TAX DEDUCTIONS AND 179d QUALIFYING CREDITS** Unless otherwise stated in the contract, any and all eligible tax credits or incentives that can be earned through the course of this project from State, Local or Federal agencies for energy efficient design are 100% the property of Climatec LLC or their designee. The paperwork, inspections and verification required to collect these credits are the sole responsibility of Climatec LLC. The customer agrees to assist Climatec LLC where required by the jurisdiction in the form of data required for the application and authorizing signatures and/or transfers. In the event the Customer incurs expenses related to the processing of the applications, Climatec LLC shall reimburse these direct costs.

12. **DELAYS.** Climatec LLC shall not be liable for any delay in the performance of the work resulting from or attributed to acts of circumstance beyond Climatec LLC's control, including but not limited to acts of God, riots, labor disputes, conditions of the premises, acts or omissions of the Purchaser, or other Contractors or delays caused by suppliers or subcontractors of Climatec LLC, etc. If Purchaser delays project for greater than 60 days, Climatec LLC can recover any cost inflation on un-billed materials that were either stored or yet to be purchased.

13. **COMPLIANCE WITH LAWS.** Climatec LLC shall comply with all applicable federal, state, and local laws and regulations. All licenses and permits required for the prosecution of the work shall be obtained and paid for by Climatec LLC.

14. **DISPUTES.** Written notice of any Dispute must be provided to the other party, describing specific details of the dispute within seven (7) days of the occurrence of the condition. This notice must be provided via certified mail. For a reasonable period commencing on the day written notice of Dispute was provided, but not to exceed thirty (30) days, the parties shall in good faith attempt to resolve the Dispute. If the parties are unable to resolve the Dispute during this period, the parties shall proceed to binding arbitration. The arbitrator shall be neutral and mutually acceptable. The arbitrator shall determine all rights and obligations under this Agreement and the award of the arbitrator shall be final, binding, and enforceable. Any award issued pursuant to this provision may be enforced in a court of competent jurisdiction, and each party hereby consents to that jurisdiction. All venues for arbitration shall be in the locality in which the project is located.

15. **CHANGE ORDER (Mid-Performance Amendments)**. Climatec LLC and the Purchaser recognize that:
    a. Purchaser may desire a mid-job change that would alter time and cost to the specified work or inconvenience Climatec LLC.

    b. Purchaser and Climatec may, at any time, and by written change order, make changes in the services to be performed under this Agreement. A form of change order is attached hereto as Attachment E. If such changes cause an increase or decrease in Climatec LLC's cost or time required for performance of any services under this Agreement, an equitable adjustment shall be made and the Agreement shall be modified in writing accordingly. Any claim of Climatec for adjustment under this clause must be submitted in writing within thirty (30) days from the date of receipt by Climatec of the notification of change. It is distinctly understood and agreed by the parties that no claim for extra services provided or materials furnished by Climatec will be allowed by Purchaser except as provided herein; nor shall Climatec provide any services or furnish any materials not covered by this Agreement unless Purchaser first approves in writing.

16. **INSURANCE.** Climatec LLC will maintain comprehensive liability and other insurance in amounts not less than those set forth below. Such insurance shall protect Climatec LLC and the Purchaser against any claims, losses, liabilities and expenses arising from the Work, whether performed by Climatec LLC or any subcontractor of Climatec LLC. The coverage shall include:

    a. Workmen's Compensation and Employers Liability Insurance - $1,000,000 each accident; $1,000,000 each employee/disease; and $1,000,000 policy limit.
    b. Comprehensive or Commercial General Liability - Bodily injury liability of $1,000,000 per occurrence and general aggregate liability of $2,000,000 per occurrence.
    c. Comprehensive Automobile Insurance – Combined single limit of $1,000,000 per occurrence.

    If the Purchaser requires that Climatec LLC maintain any special insurance coverage, policy, amendment, or rider, the Purchaser shall pay the additional cost.

17. **INDEMNITY.** To the fullest extent permitted by law, Climatec shall indemnify and hold harmless Purchaser, its officers, officials and employees from and against all liabilities, damages, losses and expenses (including reasonable attorney fees and court costs), caused by, arising out of, or resulting from the negligence, recklessness or intentional wrongful conduct of Climatec, its subcontractors, employees or any other persons used by Climatec or its subcontractors (hereinafter collectively "Climatec") related to the Services in the performance of this Agreement. Climatec LLC's duty to indemnify and hold harmless Purchaser, its officers, officials and employees shall arise in connection with any claim, damage, loss or expense that is attributable to bodily injury, sickness, disease, death, or injury to, impairment, or destruction of property including loss of use of resulting therefrom, caused by Climatec LLC's negligence, recklessness or intentional wrongful conduct in the performance of this Agreement and the negligence, recklessness or intentional wrongful conduct of any person employed by Climatec or used by Climatec in the performance of this Agreement. Such indemnity does not extend to Purchaser's negligence, recklessness or intentional wrongful conduct.

18. **NON-APPROPRIATIONS.** This Agreement is subject in all respects to the provisions of the Arizona Constitution, article IX, §5, A.R.S. § 42-17106, and applicable Arizona common law.

19. **OCCUPATIONAL SAFETY AND HEALTH.** The Parties hereto agree to notify each other immediately upon becoming aware of any alleged violation of, the Occupational Safety and Health Act (OSHA) relating in any way to the project or project site.

20. **ENTIRE AGREEMENT.** This agreement, upon acceptance, shall constitute the entire agreement between the parties and supersedes any prior representations or understandings.

21. **CHANGES.** No change or modification of any of the terms and conditions stated herein shall be binding upon Climatec LLC unless accepted by Climatec LLC in writing.

22. **SEVERABILITY.** If one or more of the provisions of this agreement are held to be unenforceable under laws, such provision(s) shall be excluded from these terms and conditions and the remaining terms and conditions shall be interpreted as if such provision were so excluded and shall be enforced in accordance to their terms and conditions.

23. **COUNTERPARTS.** This agreement may be executed in multiple counterparts, each of which shall be deemed an original and all of which together shall constitute one and the same instrument. A signature on a copy of this agreement received by either party by facsimile or portable document format (PDF) is binding upon the other party as an original. The parties shall treat a photocopy of such facsimile as a duplicate original.

24. **ASSIGNMENT.** Climatec LLC retains the right to assign its rights and obligations of this agreement with written consent of Purchaser.

25. **ACKNOWLEDGMENT.** Both Climatec LLC and the Purchaser acknowledge having read this agreement and all contract documents incorporated herein and have executed this agreement on the date written above.

26. **APPROVAL.** Each party represents that the person that has executed this agreement on its' behalf is authorized to do so.

27. **CONFLICT OF INTEREST.** Each party gives notice to the other parties that A.R.S. § 38-511 provides that the State of Arizona (the "*State*"), its political subdivisions or any department or agency of either, may within three (3) years after its execution cancel any contract without penalty or further obligation made by the State, its political subdivisions or any of the departments or agencies of either, if any person significantly involved in initiating, negotiating, securing, drafting or creating the contract on behalf of the State, its political subdivisions or any of the departments or agencies of either, is at any time while the contract or any extension of the contract is in effect, an employee or agent of any other party to the contract in any capacity or a consultant to any other party to the contract with respect to the subject matter of the contract.

28. **E-VERIFY REQUIREMENTS.** To the extent applicable under A.R.S. § 41-4401, Climatec LLC and its subcontractors warrant compliance with all federal immigration laws and regulations that relate to their employees and compliance with the E-verify requirements under A.R.S. § 23-214(A). Climatec LLC's, or its subcontractor's, breach of the above-mentioned warranty shall be deemed a material breach of this Agreement and may result in the termination of this Agreement by the Purchaser. The Purchaser retains the legal right to randomly inspect the papers and records of Climatec LLC and its subcontractors who work on this Agreement to ensure that Climatec LLC and its subcontractors is complying with the above-mentioned warranty.

    Climatec LLC and its subcontractors warrant to keep the papers and records open for random inspection by the Purchaser during normal business hours. Climatec LLC and its subcontractors shall cooperate with the Purchaser's random inspections including granting the Purchaser entry rights onto its property to perform the random inspections and waiving their respective rights to keep such papers and records confidential.

29. **TERM.** The term of this contract is from the date of final signature until the date of completion and final acceptance of the scope of work by the Purchaser.

30. TERMINATION.

a. For Convenience by Purchaser. Purchaser may, at any time, with or without reason, terminate this Agreement and compensate Climatec, LLC only for services satisfactorily rendered to the date of termination. Written notice by Purchaser shall be sufficient to stop further performance of services by Climatec, LLC. Notice shall be deemed given when received by Climatec, LLC or no later than three (3) days after the day of mailing, whichever is sooner. In the event that Purchaser terminates this Agreement pursuant to this section, Purchaser shall compensate Climatec, LLC for work completed to date.

b. With Cause by Purchaser. Purchaser may terminate this Agreement upon giving of written notice of intention to terminate for cause. Cause shall include:
   i. material violation of this Agreement by Climatec, LLC; or
   ii. any act by Climatec, LLC exposing the Purchaser to liability to others for personal injury or property damage; or
   iii. Climatec, LLC is adjudged bankrupt, Climatec, LLC makes a general assignment for the benefit of creditors or a receiver is appointed on account of Climatec, LLC's insolvency.

c. Written notice by Purchaser shall contain the reasons for such intention to terminate and unless within three (3) calendar days after that notice the condition or violation shall cease, or satisfactory arrangements for the correction thereof be made, this Agreement shall upon the expiration of the three (3) calendar days cease and terminate. In the event of this termination (for Cause), the Purchaser may secure the required services from another provider. If the reasonable expense, fees, and costs to the Purchaser exceed the cost of providing the service pursuant to this Agreement, Climatec, LLC shall pay the excess expense, fees, and/or costs to the Purchaser.

d. Upon termination, Climatec, LLC shall provide the Purchaser with all documents produced maintained or collected by Climatec, LLC pursuant to this Agreement, whether or not such documents are final or draft documents.

31. NOTICES. This Agreement shall be managed and administered on behalf of the respective parties by the individuals identified below. All invoices shall be submitted to and approved by the Purchaser's representative so identified. In addition to personal service, all notices may be given to Purchaser and to Climatec LLC by first class mail addressed to said party.

Climatec LLC:	**Town of Chino Valley:**
2851 W. Kathleen Rd.	202 N. State Route 89
Phoenix, AZ 85053	Chino Valley, AZ 86323
Contact Person:	Contact Person:
Roy Palella	Robert Smith
Operations Manager	Town Manager
Phone 602-906-4166	928-636-2646
RoyP@climatec.com	rsmith@chinoaz.net

32. NON-BOYCOTT OF ISRAEL. Climatec LLC hereby certifies that it is not currently engaged in, and agrees for the duration of this Agreement that it will not engage in, a boycott of Israel, as that term is defined in A.R.S. § 35-393.

33. UTILIZATION OF LOCAL CONTRACTORS. Climatec hereby agrees to solicit and utilize local contractor(s), where applicable, for all non-proprietary scope of work subject to qualifications, experience, and track record of the subcontractor(s) and overall project budget.

IN WITNESS WHEREOF, the parties have caused their duly authorized officers to execute this Agreement effective as of the date first above written.

Town of Chino Valley, AZ

_____
Signature

_____
Print Name

_____
Title

_____
Date

Climatec, LLC

_____
Signature

_____
Print Name

_____
Title

_____
Date

Approved As To Form

_____
Town Attorney

Attachment "A"

Scope of Work

Chino Valley Municipal Court

Controls

- Replace existing thermostats and control system with new networked thermostats. New thermostat will provide remote control, scheduling, and alert capabilities for temperature control. Networked thermostats will utilize existing WiFi network to interface with the server and existing thermostat wire to control HVAC equipment.

Lighting

- Retrofit existing interior standard efficiency T12 and incandescent lighting systems with new LED lighting systems which will provide longer lamp life. Please see the Lighting Room by Room in the Technical Appendix for detailed information on lighting scope, quantities, and locations.

- Replace existing building mounted HID lighting systems with high efficiency LED lighting systems that provide instant start capability. Please see the Lighting Room by Room in the Technical Appendix for detailed information on lighting scope, quantities, and locations.

- Install ceiling mounted occupancy sensors in appropriate locations to automatically turn off the lighting system in a space when it is not being used. Please see the Lighting Room by Room in the Technical Appendix for detailed information on lighting scope, quantities, and locations.

Misc.

- Evaluate rate schedule for each of the sites utility meters. These rates are evaluated to ensure that each meter is on the most cost effective rate plan.

Chino Valley Public Library

Controls

- Replace existing thermostats and control system with new networked thermostats. New thermostat will provide remote control, scheduling, and alert capabilities for temperature control. Networked thermostats will utilize existing WiFi network to interface with the server and existing thermostat wire to control HVAC equipment.

Lighting

- Retrofit existing standard efficiency T8, T12, and incandescent lighting systems with new LED lighting systems which will provide longer lamp life. Please see the Lighting Room by Room in the Technical Appendix for detailed information on lighting scope, quantities, and locations.

- Replace existing pole and building mounted HID, compact fluorescent (CFL) and incandescent lighting systems with high efficiency LED lighting systems that provide instant start capability. Please see the Lighting Room by Room in the Technical Appendix for detailed information on lighting scope, quantities, and locations.

- Install ceiling mounted occupancy sensors in appropriate locations to automatically turn off the lighting system in a space when it is not being used. Please see the Lighting Room by Room in the Technical Appendix for detailed information on lighting scope, quantities, and locations.

Mechanical

- Replace (4) packaged gas/electric air conditioning units with new high efficiency units of similar size and capacity. Units will be installed with factory economizers. The scope includes installation of the new units, duct/curb modifications, disconnection/reconnection of the existing electrical and gas lines, condensate connections, control connections, and start-up/testing of the new units. Please see the mechanical replacement inventory for specific locations.

- Replace (1) split system-gas furnace air conditioning unit with new high efficiency units of similar size and capacity. The scope includes installation of the new unit, duct modifications, disconnection/reconnection of the existing electrical and gas line, condensate connection, control connection, and start-up/testing of the new unit. Please see the mechanical replacement inventory for specific location.

- Replace (1) packaged heat pump air conditioning unit with new high efficiency units of similar size and capacity. Units will be installed with factory economizers. The scope includes installation of the new unit, duct/curb modifications, disconnection/reconnection of the existing electrical line, condensate connection, control connection, and start-up/testing of the new unit. Please see the mechanical replacement inventory for specific location.

Misc.

- Evaluate rate schedule for each of the sites utility meters. These rates are evaluated to ensure that each meter is on the most cost effective rate plan.

Aquatic Center / Ball Field Concessions

Controls

- Install "push to run" controls on the heating and cooling systems in air conditioned areas. These controls shall allow the HVAC systems to operate for a programmed period under thermostatic control while limiting set-point adjustment and after hour operations.

Lighting

- Retrofit existing standard efficiency T8 and compact fluorescent (CFL) lighting systems with new LED lighting systems which will provide longer lamp life. Please see the Lighting Room by Room in the Technical Appendix for detailed information on lighting scope, quantities, and locations.

- Replace existing building and pole mounted HID and compact fluorescent (CFL) lighting systems with high efficiency LED lighting systems that provide instant start capability. Please see the Lighting Room by Room in the Technical Appendix for detailed information on lighting scope, quantities, and locations.

- Re-locate (6) poles in the ball field outfield to the nearest sideline or to the outfield fence limits as requested by the owner. Scope will include:
    - Remove and re-install poles, fixture boom, light fixtures and ballasts. All moved fixtures shall be re-lamped and fixtures shall be redirected to the limits of the existing booms. Fixtures may be deleted if requested
    - Underground electrical conduits shall be re-routed and new wire pulled as required. No junction boxes shall remain in the field of play
    - All disrupted soil will be replaced and compacted. Sprinkler lines damaged by the trenching shall be repaired. Sod will not be repaired/replaced.

- Modify existing as-built drawings to show new conduit runs. No changes to load, circuiting, controls or breakers.
- The holes for the 6 relocated poles shall be drilled by Arizona Public Service (APS) utility to the same depth as the existing.
- Permitting and engineering are not included for pole installation, electrical, structural or soils.

Misc.

- Evaluate rate schedule for each of the sites utility meters. These rates are evaluated to ensure that each meter is on the most cost effective rate plan.

Public Works Development Services

Controls

- Replace existing thermostats and control system with new networked thermostats. New thermostat will provide remote control, scheduling, and alert capabilities for temperature control. Networked thermostats will utilize existing WiFi network to interface with the server and existing thermostat wire to control HVAC equipment.

Lighting

- Retrofit existing standard efficiency T8, T12, and incandescent lighting systems with new LED lighting systems which will provide longer lamp life. Please see the Lighting Room by Room in the Technical Appendix for detailed information on lighting scope, quantities, and locations.

- Replace existing building mounted HID and compact fluorescent (CFL) lighting systems with high efficiency LED lighting systems that provide instant start capability. Please see the Lighting Room by Room in the Technical Appendix for detailed information on lighting scope, quantities, and locations.

Misc.

- Evaluate rate schedule for each of the sites utility meters. These rates are evaluated to ensure that each meter is on the most cost effective rate plan.

Senior Center

Controls

- Replace existing thermostats and control system with new networked thermostats. New thermostat will provide remote control, scheduling, and alert capabilities for temperature control. Networked thermostats will utilize existing WiFi network to interface with the server and existing thermostat wire to control HVAC equipment.

Lighting

- Retrofit existing standard efficiency T12, compact fluorescent (CFL), and incandescent lighting systems with new LED lighting systems which will provide longer lamp life. Please see the Lighting Room by Room in the Technical Appendix for detailed information on lighting scope, quantities, and locations.

- Replace existing building mounted HID and incandescent lighting systems with high efficiency LED lighting systems that provide exceptional light quality, long life and instant start capability. Please see the Lighting Room by Room in the Technical Appendix for detailed information on lighting scope, quantities, and locations.

Misc.

- Evaluate rate schedule for each of the sites utility meters. These rates are evaluated to ensure that each meter is on the most cost effective rate plan.

Animal Control

Controls

- Install "push to run" controls on the heating and cooling systems in air conditioned areas. These controls shall allow the HVAC systems to operate for a programmed period under thermostatic control while limiting set-point adjustment and after hour operations.

Lighting

- Retrofit existing standard efficiency T12 lighting systems with new LED lighting systems which will provide longer lamp life. Please see the Lighting Room by Room in the Technical Appendix for detailed information on lighting scope, quantities, and locations.

- Replace existing building mounted HID lighting systems with high efficiency LED lighting systems that provide instant start capability. Please see the Lighting Room by Room in the Technical Appendix for detailed information on lighting scope, quantities, and locations.

Misc.

- Evaluate rate schedule for each of the sites utility meters. These rates are evaluated to ensure that each meter is on the most cost effective rate plan.

Town Hall

Controls

- Replace existing thermostats and control system with new networked thermostats. New thermostat will provide remote control, scheduling, and alert capabilities for temperature control. Networked thermostats will utilize existing WiFi network to interface with the server and existing thermostat wire to control HVAC equipment.

Lighting

- Retrofit existing standard efficiency T8 and compact fluorescent (CFL) lighting systems with new LED lighting systems which will provide longer lamp life. Please see the Lighting Room by Room in the Technical Appendix for detailed information on lighting scope, quantities, and locations.

- Replace existing pole and building mounted HID lighting systems with high efficiency LED lighting systems that provide instant start capability. Please see the Lighting Room by Room in the Technical Appendix for detailed information on lighting scope, quantities, and locations.

- Install ceiling mounted occupancy sensors in appropriate locations to automatically turn off the lighting system in a space when it is not being used. Please see the Lighting Room by Room in the Technical Appendix for detailed information on lighting scope, quantities, and locations.

Misc.

- Evaluate rate schedule for each of the sites utility meters. These rates are evaluated to ensure that each meter is on the most cost effective rate plan.

Shop Building / Police Department Mobile

Controls

- Install "push to run" controls on the heating and cooling systems in air conditioned areas. These controls shall allow the HVAC systems to operate for a programmed period under thermostatic control while limiting set-point adjustment and after hour operations.

Lighting

- Retrofit existing standard efficiency T12 and incandescent lighting systems with new LED lighting systems. Please see the Lighting Room by Room in the Technical Appendix for detailed information on lighting scope, quantities, and locations.

- Replace existing building mounted HID and incandescent lighting systems with high efficiency LED lighting systems that provide instant start capability. Please see the Lighting Room by Room in the Technical Appendix for detailed information on lighting scope, quantities, and locations.

Misc.

- Evaluate rate schedule for each of the sites utility meters. These rates are evaluated to ensure that each meter is on the most cost effective rate plan.

Chino Valley Police Department

Controls

- Replace existing thermostats and control system with new networked thermostats. New thermostat will provide remote control, scheduling, and alert capabilities for temperature control. Networked thermostats will utilize existing WiFi network to interface with the server and existing thermostat wire to control HVAC equipment.

Lighting

- Retrofit existing standard efficiency T8, T12, and incandescent lighting systems with new LED lighting systems which will provide longer lamp life. Please see the Lighting Room by Room in the Technical Appendix for detailed information on lighting scope, quantities, and locations.

- Replace existing building mounted HID and incandescent lighting systems with high efficiency LED lighting systems that instant start capability. Please see the Lighting Room by Room in the Technical Appendix for detailed information on lighting scope, quantities, and locations.

- Install ceiling mounted occupancy sensors in appropriate locations to automatically turn off the lighting system in a space when it is not being used. Please see the Lighting Room by Room in the Technical Appendix for detailed information on lighting scope, quantities, and locations.

Mechanical

- Replace (1) packaged gas/electric air conditioning unit with new high efficiency units of similar size and capacity. The scope includes installation of the new unit, duct/curb modifications, disconnection/reconnection of the existing electrical and gas lines, condensate connection, control connection, and start-up/testing of the new unit. Please see the mechanical replacement inventory for specific locations.

- Replace (1) split system-gas furnace air conditioning unit with new high efficiency units of similar size and capacity. The scope includes installation of the new unit, duct modifications, disconnection/reconnection of the existing electrical and gas line, condensate connection, control

connection, and start-up/testing of the new unit. Please see the mechanical replacement inventory for specific location.

Misc.

- Evaluate rate schedule for each of the sites utility meters. These rates are evaluated to ensure that each meter is on the most cost effective rate plan.

Old Food Bank Building

Controls

- Install "push to run" controls on the heating and cooling systems in air conditioned areas. These controls shall allow the HVAC systems to operate for a programmed period under thermostatic control while limiting set-point adjustment and after hour operations.

Lighting

- Retrofit existing standard efficiency T12 and incandescent lighting systems with new LED lighting systems provide longer lamp life. Please see the Lighting Room by Room in the Technical Appendix for detailed information on lighting scope, quantities, and locations.

- Replace existing building mounted incandescent lighting systems with high efficiency LED lighting systems that provide instant start capability. Please see the Lighting Room by Room in the Technical Appendix for detailed information on lighting scope, quantities, and locations.

Misc.

- Evaluate rate schedule for each of the sites utility meters. These rates are evaluated to ensure that each meter is on the most cost effective rate plan.

Community Center

Controls

- Install "push to run" controls on the heating and cooling systems in air conditioned areas. These controls shall allow the HVAC systems to operate for a programmed period under thermostatic control while limiting set-point adjustment and after hour operations.

Lighting

- Retrofit existing standard efficiency T8 lighting systems with new LED lighting systems which will provide longer lamp life. Please see the Lighting Room by Room in the Technical Appendix for detailed information on lighting scope, quantities, and locations.

- Replace existing building and pole mounted HID and compact fluorescent (CFL) lighting systems with high efficiency LED lighting systems that provide instant start capability. Please see the Lighting Room by Room in the Technical Appendix for detailed information on lighting scope, quantities, and locations.

Misc.

- Evaluate rate schedule for each of the sites utility meters. These rates are evaluated to ensure that each meter is on the most cost effective rate plan.

Parks

Lighting

- Retrofit existing standard efficiency T12 lighting systems with new LED lighting systems which will provide longer lamp life. Please see the Lighting Room by Room in the Technical Appendix for detailed information on lighting scope, quantities, and locations.

- Replace existing building and pole mounted HID lighting systems with high efficiency LED lighting systems that provide instant start capability. Please see the Lighting Room by Room in the Technical Appendix for detailed information on lighting scope, quantities, and locations.

Misc.

- Evaluate rate schedule for each of the sites utility meters. These rates are evaluated to ensure that each meter is on the most cost effective rate plan.

Roads Department Building

Controls

- Install "push to run" controls on the heating and cooling systems in air conditioned areas. These controls shall allow the HVAC systems to operate for a programmed period under thermostatic control while limiting set-point adjustment and after hour operations.

Lighting

- Retrofit existing standard efficiency T12 and incandescent lighting systems with new LED lighting systems which will provide longer lamp life. Please see the Lighting Room by Room in the Technical Appendix for detailed information on lighting scope, quantities, and locations.

- Replace existing building and pole mounted HID lighting systems with high efficiency LED lighting systems that provide instant start capability. Please see the Lighting Room by Room in the Technical Appendix for detailed information on lighting scope, quantities, and locations.

Misc.

- Evaluate rate schedule for each of the sites utility meters. These rates are evaluated to ensure that each meter is on the most cost effective rate plan.

Bright Star

Lighting

- Retrofit existing standard efficiency T8 lighting systems with new LED lighting systems which will provide longer lamp life. Please see the Lighting Room by Room in the Technical Appendix for detailed information on lighting scope, quantities, and locations
.

- Replace existing building mounted HID lighting systems with high efficiency LED lighting systems that provide instant start capability. Please see the Lighting Room by Room in the Technical Appendix for detailed information on lighting scope, quantities, and locations.

Misc.

- Evaluate rate schedule for each of the sites utility meters. These rates are evaluated to ensure that each meter is on the most cost effective rate plan.

Waste Water Treatment Plant

Lighting

- Retrofit existing standard efficiency T12 and incandescent lighting systems with new LED lighting systems which will provide longer lamp life. Please see the Lighting Room by Room in the Technical Appendix for detailed information on lighting scope, quantities, and locations.

- Replace existing building mounted HID, T12, and incandescent lighting systems with high efficiency LED lighting systems that provide instant start capability. Please see the Lighting Room by Room in the Technical Appendix for detailed information on lighting scope, quantities, and locations.

Misc.

- Evaluate rate schedule for each of the sites utility meters. These rates are evaluated to ensure that each meter is on the most cost effective rate plan.

Country West

Lighting

- Retrofit existing standard efficiency T8 lighting systems to the latest generation of T8 lamps with electronic ballasts which will provide longer lamp life. Please see the Lighting Room by Room in the Technical Appendix for detailed information on lighting scope, quantities, and locations.

- Replace wall mounted HID lighting systems with high efficiency LED lighting systems that provide instant start capability. Please see the Lighting Room by Room in the Technical Appendix for detailed information on lighting scope, quantities, and locations.

Misc.

- Evaluate rate schedule for each of the sites utility meters. These rates are evaluated to ensure that each meter is on the most cost effective rate plan.

Street Lights / Traffic Signals

Lighting

- Replace security and roadway traffic signal HID lighting systems with high efficiency LED lighting systems that provide instant start capability. Please see the Lighting Room by Room in the Technical Appendix for detailed information on lighting scope, quantities, and locations.

Misc.

- Evaluate rate schedule for each of the sites utility meters. These rates are evaluated to ensure that each meter is on the most cost effective rate plan.

Attachment "B"

Lighting Summary

Town of Chino Valley - Lighting Detail Report

(sorted by building, floor, area)

Animal Control - 1950 Voss Dr, Chino Valley, AZ 86323

PRE-RETROFIT							POST RETROFIT							
Location	Existing Fixture Description	Qty	Wt/Fxt	kW	Hours	kWh	Qty	Retrofit Code Description (Sensor in RED)	Wt/Fxt	kW	Hours	kWh	kW Svd	kWh Svd
Building/Area: Main Building														
1st Floor														
Rf#-1 Rm - entry office area	1x4x 2L sm strip, F40T12 34w, magnetic ballast	2	59	0.118	2,200	260	2	RLT82 - (2) LED 4' T8 lamp 12w, 50,000+ hour rated life at L70, (1) 2L LP electronic ballas/driver	19	0.037	2,200	82	0.0806	177
Rf#-2 Rm - kennel area	1x4x 2L sm strip, F40T12 34w, magnetic ballast	9	72	0.648	2,200	1,426	9	RLT82 - (2) LED 4' T8 lamp 12w, 50,000+ hour rated life at L70, (1) 2L LP electronic ballas/driver	19	0.168	2,200	371	0.4795	1,055
Rf#-3 Rm - office #2	1x4x 2L sm strip, F40T12 34w, magnetic ballast	4	72	0.288	2,200	634	4	RLT82 - (2) LED 4' T8 lamp 12w, 50,000+ hour rated life at L70, (1) 2L LP electronic ballas/driver	19	0.075	2,200	165	0.2131	469
Rf#-4 Rm - ext-building mounted	HPS 1L wm wall pack FCO, HPS 150w, HID ballast	1	195	0.195	4,380	854	1	NL030/wp/fc - New LED wall pack, 50,000 hour L70 rated life, 30w	30	0.03	4,380	131	0.165	723
Qty and kW for Animal Control :		**16**		**1.2**			**16**			**0.3**			**0.9**	
kWh for Animal Control :						**3,173**						**749**		**2,424**

W* = wall switch sensor; C* = ceiling sensor; E* = existing sensor, L* Dimming Control

Town of Chino Valley - Lighting Detail Report

(sorted by building, floor, area)

Bright Star Pumps / Wells -

PRE-RETROFIT							POST RETROFIT							
Location	Existing Fixture Description	Qty	Wt/Fxt	kW	Hours	kWh	Qty	Retrofit Code Description (Sensor in RED)	Wt/Fxt	kW	Hours	kWh	kW Svd	kWh Svd
Building/Area: Water Campus														
1st Floor														
Rf#-2 Rm - main room	1x4x 2L sm vapor tight, F32T8 32w, electronic ballast	6	59	0.354	800	283	6	RLT82 - (2) LED 4' T8 lamp 12w, 50,000+ hour rated life at L70, (1) 2L LP electronic ballas/driver	19	0.112	800	90	0.2417	193
Rf#-3 Rm - ext-building mounted	Inc. 2L par flood, Inc. 90w P38, n/a	1	180	0.18	4,380	788	1	NL030/wp/ft - New LED wall pack, 50,000 hour L70 rated life, 30w	30	0.03	4,380	131	0.15	657
Rf#-4 Rm - ext-building mounted	HPS 1L wm wall pack FT, HPS 100w, HID ballast	2	130	0.26	4,380	1,139	2	NL030/wp/ft - New LED wall pack, 50,000 hour L70 rated life, 30w	30	0.06	4,380	263	0.2	876
Building/Area: Yavapai Well														
1st Floor														
Rf#-1 Rm - ext building mount	HPS 1L wm wall pack FCO, HPS 70w, HID ballast	1	95	0.095	4,380	416	1	NL030/wp/fc - New LED wall pack, 50,000 hour L70 rated life, 30w	30	0.03	4,380	131	0.065	285
Qty and kW for Bright Star Pumps / Wells :		**10**		**0.9**			**10**			**0.2**			**0.7**	
kWh for Bright Star Pumps / Wells :						**2,627**						**615**		**2,011**

W* = wall switch sensor; C* = ceiling sensor; E* = existing sensor, L* Dimming Control

Town of Chino Valley - Lighting Detail Report

(sorted by building, floor, area)

Cameron Property (Paulden) - vacant - 2440 N Troy Lane, Paulden, AZ 86334

PRE-RETROFIT							POST RETROFIT							
Location	Existing Fixture Description	Qty	Wt/Fxt	kW	Hours	kWh	Qty	Retrofit Code Description (Sensor in RED)	Wt/Fxt	kW	Hours	kWh	kW Svd	kWh Svd
Building/Area: All Buildings														
1st Floor														
Rf#-1 Rm - All Interior Space	DND (do not do, left as is), n/a, n/a		0	0	1,500	0	0	DND - DND: (do not do, fixtures left as is)	0	0	1,500	0	0	0
Rf#-2 Rm - All Exterior Space	DND (do not do, left as is), n/a, n/a		0	0	4,380	0	0	DND - DND: (do not do, fixtures left as is)	0	0	4,380	0	0	0

Qty and kW for Cameron Property (Paulden) - vacant : **0.0** **0.0** **0.0**

kWh for Cameron Property (Paulden) - vacant :

W* = wall switch sensor; C* = ceiling sensor; E* = existing sensor, L* Dimming Control

Town of Chino Valley - Lighting Detail Report

(sorted by building, floor, area)

CLIMATEC BUILDING TECHNOLOGIES GROUP

Community Center - 1527 N Road 1 East, Chino Valley, AZ 86323

PRE-RETROFIT							POST RETROFIT							
Location	Existing Fixture Description	Qty	Wt/Fxt	kW	Hours	kWh	Qty	Retrofit Code Description (Sensor in RED)	Wt/Fxt	kW	Hours	kWh	kW Svd	kWh Svd
Building/Area: Main Building														
1st Floor														
Rf#-1 Rm - entry area	1x4x 3L sm box, F32T8 32w, electronic ballast	20	90	1.8	1,500	2,700	20	RLT83 - (3) LED 4' T8 lamp 12w, 50,000+ hour rated life at L70, (1) 2L LP electronic ballas/driver	28	0.562	1,500	842	1.2384	1,858
Rf#-2 Rm - Restroom	1x4x 2L sm wp, F32T8 32w, electronic ballast	2	59	0.118	800	94	2	RLT82 - (2) LED 4' T8 lamp 12w, 50,000+ hour rated life at L70, (1) 2L LP electronic ballas/driver	19	0.037	800	30	0.0806	64
Rf#-3 Rm - custodial closet	1x4x 2L sm wp, F32T8 32w, electronic ballast	3	59	0.177	300	53	3	RLT82 - (2) LED 4' T8 lamp 12w, 50,000+ hour rated life at L70, (1) 2L LP electronic ballas/driver	19	0.056	300	17	0.1208	36
Rf#-4 Rm - hallway	1x4x 2L sm wp, F32T8 32w, electronic ballast	3	59	0.177	1,500	266	3	RLT82 - (2) LED 4' T8 lamp 12w, 50,000+ hour rated life at L70, (1) 2L LP electronic ballas/driver	19	0.056	1,500	84	0.1208	181
Rf#-5 Rm - Office #1	1x4x 3L sm box, F32T8 32w, electronic ballast	2	90	0.18	1,500	270	2	RLT83 - (3) LED 4' T8 lamp 12w, 50,000+ hour rated life at L70, (1) 2L LP electronic ballas/driver	28	0.056	1,500	84	0.1238	186
Rf#-6 Rm - Office #2	1x4x 3L sm box, F32T8 32w, electronic ballast	2	90	0.18	1,500	270	2	RLT83 - (3) LED 4' T8 lamp 12w, 50,000+ hour rated life at L70, (1) 2L LP electronic ballas/driver	28	0.056	1,500	84	0.1238	186
Rf#-7 Rm - Office #3	1x4x 3L sm box, F32T8 32w, electronic ballast	2	90	0.18	1,500	270	2	RLT83 - (3) LED 4' T8 lamp 12w, 50,000+ hour rated life at L70, (1) 2L LP electronic ballas/driver	28	0.056	1,500	84	0.1238	186
Rf#-8 Rm - M RR	1x4x 3L sm box, F32T8 32w, electronic ballast	1	90	0.09	800	72	1	RLT83 - (3) LED 4' T8 lamp 12w, 50,000+ hour rated life at L70, (1) 2L LP electronic ballas/driver	28	0.028	800	22	0.0619	50
Rf#-9 Rm - W RR	1x4x 3L sm box, F32T8 32w, electronic ballast	1	90	0.09	800	72	1	RLT83 - (3) LED 4' T8 lamp 12w, 50,000+ hour rated life at L70, (1) 2L LP electronic ballas/driver	28	0.028	800	22	0.0619	50
Rf#-10 Rm - closet	1x4x 2L sm wp, F32T8 32w, electronic ballast	2	59	0.118	300	35	2	RLT82 - (2) LED 4' T8 lamp 12w, 50,000+ hour rated life at L70, (1) 2L LP electronic ballas/driver	19	0.037	300	11	0.0806	24
Rf#-11 Rm - kitchen	1x4x 2L sm wp, F32T8 32w, electronic ballast	3	59	0.177	800	142	3	RLT82 - (2) LED 4' T8 lamp 12w, 50,000+ hour rated life at L70, (1) 2L LP electronic ballas/driver	19	0.056	800	45	0.1208	97
Rf#-12 Rm - Open Area #2	1x4x 3L sm box, F32T8 32w, electronic ballast	12	90	1.08	1,500	1,620	12	RLT83 - (3) LED 4' T8 lamp 12w, 50,000+ hour rated life at L70, (1) 2L LP electronic ballas/driver	28	0.337	1,500	505	0.7430	1,115
Rf#-13 Rm - Open Area #2	1x4x 2L sm wp, F32T8 32w, electronic ballast	1	59	0.059	1,500	89	1	RLT82 - (2) LED 4' T8 lamp 12w, 50,000+ hour rated life at L70, (1) 2L LP electronic ballas/driver	19	0.019	1,500	28	0.0403	60
Rf#-14 Rm - back storage area	2x4x 3L rec trf, F32T8 32w, electronic ballast	4	90	0.36	800	288	4	RLT83 - (3) LED 4' T8 lamp 12w, 50,000+ hour rated life at L70, (1) 2L LP electronic ballas/driver	28	0.112	800	90	0.2477	198
Rf#-15 Rm - office	1x4x 3L sm box, F32T8 32w, electronic ballast	2	90	0.18	1,500	270	2	RLT83 - (3) LED 4' T8 lamp 12w, 50,000+ hour rated life at L70, (1) 2L LP electronic ballas/driver	28	0.056	1,500	84	0.1238	186
Rf#-16 Rm - electrical	1x4x 2L sm strip, F32T8 32w, electronic ballast	1	59	0.059	300	18	1	RLT82 - (2) LED 4' T8 lamp 12w, 50,000+ hour rated life at L70, (1) 2L LP electronic ballas/driver	19	0.019	300	6	0.0403	12
Rf#-17 Rm - ext-building mounted	CF 1L rec can, CF 18w, CFL ballast	14	20	0.28	4,380	1,226	14	RL091/ckit - (1) recessed can kit, LED 9w, new trim face, 50,000 hour+ rated life at L70	8	0.119	4,380	521	0.161	705
Rf#-18 Rm - ext-pole mounted	HPS 1L shoe box, RdP, DB, 2SH, HPS 150w, HID ballast	1	195	0.195	4,380	854	1	NL054/p/s - New area light pole or bldg mnt 54w, 100,000+ hour rated life at L70, on board occ sensor	54	0.054	4,380	237	0.141	618
Qty and kW for Community Center :		**76**		**5.5**			**76**			**1.7**			**3.8**	
kWh for Community Center :						**8,609**						**2,796**		**5,812**

W* = wall switch sensor; C* = ceiling sensor; E* = existing sensor, L* Dimming Control

Town of Chino Valley - Lighting Detail Report

(sorted by building, floor, area)

Country West Pumps / Wells - 853 N. Highway 89, Chino Valley, AZ 86323

PRE-RETROFIT							POST RETROFIT							
Location	Existing Fixture Description	Qty	Wt/Fxt	kW	Hours	kWh	Qty	Retrofit Code Description (Sensor in RED)	Wt/Fxt	kW	Hours	kWh	kW Svd	kWh Svd
Building/Area: Bldg 1														
1st Floor														
Rf#-1 Rm - main room	1x4x 2L sm wp, F32T8 32w, electronic ballast	4	59	0.236	300	71	4	RLT82 - (2) LED 4' T8 lamp 12w, 50,000+ hour rated life at L70, (1) 2L LP electronic ballas/driver	19	0.075	300	22	0.1611	48
Rf#-2 Rm - ext-building mount	HPS 1L wm wall pack FCO, HPS 100w, HID ballast	1	130	0.13	4,380	569	1	NL030/wp/fc - New LED wall pack, 50,000 hour L70 rated life, 30w	30	0.03	4,380	131	0.1	438
Building/Area: Bldg 2														
1st Floor														
Rf#-3 Rm - main room	1x4x 2L sm wp, F32T8 32w, electronic ballast	4	59	0.236	300	71	4	RLT82 - (2) LED 4' T8 lamp 12w, 50,000+ hour rated life at L70, (1) 2L LP electronic ballas/driver	19	0.075	300	22	0.1611	48
Qty and kW for Country West Pumps / Wells :		**9**		**0.6**			**9**			**0.2**			**0.4**	
kWh for Country West Pumps / Wells :						**711**						**175**		**534**

W* = wall switch sensor; C* = ceiling sensor; E* = existing sensor, L* Dimming Control

Town of Chino Valley - Lighting Detail Report

(sorted by building, floor, area)

Court Building - 1985 N Road 1 West, Chino Valley, AZ 86323

PRE-RETROFIT							POST RETROFIT							
Location	Existing Fixture Description	Qty	Wt/Fxt	kW	Hours	kWh	Qty	Retrofit Code Description (Sensor in RED)	Wt/Fxt	kW	Hours	kWh	kW Svd	kWh Svd
Building/Area: Main Building														
1st Floor														
Rf#-1 Rm - Entry hallway	2x4x 4L rec trf, F40T12 34w, magnetic ballast	11	144	1.584	1,500	2,376	11	RLT83/r - (3) LED 4' T8 lamp 12w, 50,000+ hour rated life at L70, (1) 2L LP electronic ballas/driver, (1) 2x4 RFL	28	0.309	1,500	463	1.2751	1,913
Rf#-2 Rm - court room	2x4x 4L rec trf, F40T12 34w, magnetic ballast	12	144	1.728	1,500	2,592	12	RL036/tkit - (1) LED 36w linear recessed troffer w/volumetric lens, 100,000+ hour life at L70	36	0.432	1,500	648	1.296	1,944
Rf#-3 Rm - M RR	2x4x 4L rec trf, F40T12 34w, magnetic ballast	2	144	0.288	1,500	432	2	RLT83/r - (3) LED 4' T8 lamp 12w, 50,000+ hour rated life at L70, (1) 2L LP electronic ballas/driver, (1) 2x4 RFL	28	0.056	1,500	84	0.2318	348
Rf#-4 Rm - W RR	2x4x 4L rec trf, F40T12 34w, magnetic ballast	2	144	0.288	1,500	432	2	RLT83/r - (3) LED 4' T8 lamp 12w, 50,000+ hour rated life at L70, (1) 2L LP electronic ballas/driver, (1) 2x4 RFL	28	0.056	1,500	84	0.2318	348
Rf#-5 Rm - clerk of the court	2x4x 4L rec trf, F40T12 34w, magnetic ballast	8	144	1.152	1,500	1,728	8	RLT83/r - (3) LED 4' T8 lamp 12w, 50,000+ hour rated life at L70, (1) 2L LP electronic ballas/driver, (1) 2x4 RFL	28	0.225	1,275	286	0.9274	1,442
Rf#-6 Rm - Conference Room	2x4x 4L rec trf, F40T12 34w, magnetic ballast	2	144	0.288	1,500	432	2	RLT83/r - (3) LED 4' T8 lamp 12w, 50,000+ hour rated life at L70, (1) 2L LP electronic ballas/driver, (1) 2x4 RFL	28	0.056	1,500	84	0.2318	348
Rf#-7 Rm - Office #1	2x4x 4L rec trf, F40T12 34w, magnetic ballast	2	144	0.288	1,500	432	2	RLT83/r - (3) LED 4' T8 lamp 12w, 50,000+ hour rated life at L70, (1) 2L LP electronic ballas/driver, (1) 2x4 RFL	28	0.056	1,500	84	0.2318	348
Rf#-8 Rm - Restroom	Inc. 1L sm dome, Inc. 60w A19, n/a	1	60	0.06	500	30	1	RL091/s - (1) LED 9w A19 screw in lamp	9	0.009	500	5	0.051	26
Rf#-9 Rm - Office #2	2x4x 4L rec trf, F40T12 34w, magnetic ballast	2	144	0.288	1,500	432	2	RLT83/r - (3) LED 4' T8 lamp 12w, 50,000+ hour rated life at L70, (1) 2L LP electronic ballas/driver, (1) 2x4 RFL	28	0.056	1,500	84	0.2318	348
Rf#-10 Rm - Office #3	2x4x 4L rec trf, F40T12 34w, magnetic ballast	2	144	0.288	1,500	432	2	RLT83/r - (3) LED 4' T8 lamp 12w, 50,000+ hour rated life at L70, (1) 2L LP electronic ballas/driver, (1) 2x4 RFL	28	0.056	1,500	84	0.2318	348
Rf#-11 Rm - Office #4	2x4x 4L rec trf, F40T12 34w, magnetic ballast	2	144	0.288	1,500	432	2	RLT83/r - (3) LED 4' T8 lamp 12w, 50,000+ hour rated life at L70, (1) 2L LP electronic ballas/driver, (1) 2x4 RFL	28	0.056	1,500	84	0.2318	348
Rf#-12 Rm - Office #5	2x4x 4L rec trf, F40T12 34w, magnetic ballast	2	144	0.288	1,500	432	2	RLT83/r - (3) LED 4' T8 lamp 12w, 50,000+ hour rated life at L70, (1) 2L LP electronic ballas/driver, (1) 2x4 RFL	28	0.056	1,500	84	0.2318	348
Rf#-13 Rm - Office #6	2x4x 4L rec trf, F40T12 34w, magnetic ballast	2	144	0.288	1,500	432	2	RLT83/r - (3) LED 4' T8 lamp 12w, 50,000+ hour rated life at L70, (1) 2L LP electronic ballas/driver, (1) 2x4 RFL	28	0.056	1,500	84	0.2318	348
Rf#-14 Rm - file room	2x4x 4L rec trf, F40T12 34w, magnetic ballast	2	144	0.288	1,500	432	2	RLT83/r - (3) LED 4' T8 lamp 12w, 50,000+ hour rated life at L70, (1) 2L LP electronic ballas/driver, (1) 2x4 RFL	28	0.056	1,500	84	0.2318	348
Rf#-15 Rm - Office #7	2x4x 4L rec trf, F40T12 34w, magnetic ballast	2	144	0.288	1,500	432	2	RLT83/r - (3) LED 4' T8 lamp 12w, 50,000+ hour rated life at L70, (1) 2L LP electronic ballas/driver, (1) 2x4 RFL	28	0.056	1,500	84	0.2318	348
Rf#-16 Rm - ext-building mounted	HPS 1L wm wall pack small, HPS 70w, HID ballast	4	95	0.38	1,460	555	4	NL030/wp/fc - New LED wall pack, 50,000 hour L70 rated life, 30w	30	0.12	1,460	175	0.26	380
Rf#-17 Rm - ext-building mounted	HPS 1L wm wall pack PCO, HPS 70w, HID ballast	1	95	0.095	1,460	139	1	NL030/wp/fc - New LED wall pack, 50,000 hour L70 rated life, 30w	30	0.03	1,460	44	0.065	95
Rf#-18 Rm - ext-building mounted	QH 1L flood, knuckle, QH 300w, n/a	1	300	0.3	1,460	438	1	NL019/fld - New LED flood mounted, 50,000 hour L70 rated life, 19w	19	0.019	1,460	28	0.281	410
Qty and kW for Court Building :		**60**		**8.5**			**60**			**1.8**			**6.7**	
kWh for Court Building :						**12,610**						**2,573**		**10,038**

W* = wall switch sensor; C* = ceiling sensor; E* = existing sensor, L* Dimming Control

Library - 1020 W Palomino Rd., Chino Valley, AZ 86323

PRE-RETROFIT							POST RETROFIT							
Location	Existing Fixture Description	Qty	Wt/Fxt	kW	Hours	kWh	Qty	Retrofit Code Description (Sensor in RED)	Wt/Fxt	kW	Hours	kWh	kW Svd	kWh Svd
Building/Area: Main Building														
1st Floor														
Rf#-1 Rm - main room right	1x4x 4L sm box, F40T12 34w, magnetic ballast	26	144	3.744	2,500	9,360	26	NF331/4w - New 4' wrap w/3 LED T8 12w lamps, (1) 3L LP electronic ballast	28	0.730	2,500	1,825	3.0139	7,535
Rf#-2 Rm - reading room	1x4x 2L sm wp, F40T12 34w, magnetic ballast	15	72	1.08	2,500	2,700	15	RLT82 - (2) LED 4' T8 lamp 12w, 50,000+ hour rated life at L70, (1) 2L LP electronic ballas/driver	19	0.281	2,500	702	0.7992	1,998
Rf#-3 Rm - Office #1	1x4x 2L sm wp, F40T12 34w, magnetic ballast	2	72	0.144	1,800	259	2	RLT82 - (2) LED 4' T8 lamp 12w, 50,000+ hour rated life at L70, (1) 2L LP electronic ballas/driver	19	0.037	1,800	67	0.1066	192
Rf#-4 Rm - main room left side	2x4x 4L rec trf, F40T12 34w, magnetic ballast	16	144	2.304	2,200	5,069	16	RLT83/r - (3) LED 4' T8 lamp 12w, 50,000+ hour rated life at L70, (1) 2L LP electronic ballas/driver, (1) 2x4 RFL	28	0.449	2,200	988	1.8547	4,080
Rf#-5 Rm - RR Lobby	2x4x 4L rec trf, F40T12 34w, magnetic ballast	1	144	0.144	2,200	317	1	RLT83/r - (3) LED 4' T8 lamp 12w, 50,000+ hour rated life at L70, (1) 2L LP electronic ballas/driver, (1) 2x4 RFL	28	0.028	2,200	62	0.1159	255
Rf#-6 Rm - M RR	1x4x 4L sm wp, F40T12 34w, magnetic ballast	2	144	0.288	1,500	432	2	NF331/4w - New 4' wrap w/3 LED T8 12w lamps, (1) 3L LP electronic ballast	28	0.056	1,500	84	0.2318	348
Rf#-7 Rm - W RR	1x4x 4L sm wp, F40T12 34w, magnetic ballast	2	144	0.288	1,500	432	2	NF331/4w - New 4' wrap w/3 LED T8 12w lamps, (1) 3L LP electronic ballast	28	0.056	1,500	84	0.2318	348
Rf#-8 Rm - Staff Only Book room	2x4x 4L rec trf, F40T12 34w, magnetic ballast	7	144	1.008	2,200	2,218	7	RLT83/r - (3) LED 4' T8 lamp 12w, 50,000+ hour rated life at L70, (1) 2L LP electronic ballas/driver, (1) 2x4 RFL C1	28	0.197	1,870	368	0.8114	1,850
Rf#-9 Rm - Office #1	2x4x 4L rec trf, F40T12 34w, magnetic ballast	2	144	0.288	1,800	518	2	RLT83/r - (3) LED 4' T8 lamp 12w, 50,000+ hour rated life at L70, (1) 2L LP electronic ballas/driver, (1) 2x4 RFL	28	0.056	1,800	101	0.2318	417
Rf#-10 Rm - Child Area entry	1x4x 4L sm wp, F40T12 34w, magnetic ballast	3	144	0.432	2,200	950	3	NF331/4w - New 4' wrap w/3 LED T8 12w lamps, (1) 3L LP electronic ballast	28	0.084	2,200	185	0.3478	765
Rf#-11 Rm - Child Area open space	1x4x 4L sm wp, F40T12 34w, magnetic ballast	12	144	1.728	2,200	3,802	12	NF331/4w - New 4' wrap w/3 LED T8 12w lamps, (1) 3L LP electronic ballast	28	0.337	2,200	741	1.3910	3,060
Rf#-12 Rm - New space open area #1	2x4x 4L rec trf, F32T8 32w, electronic ballast	6	112	0.672	2,200	1,478	6	RLT83/r - (3) LED 4' T8 lamp 12w, 50,000+ hour rated life at L70, (1) 2L LP electronic ballas/driver, (1) 2x4 RFL C1	28	0.168	1,870	315	0.5035	1,163
Rf#-13 Rm - New Space RR hallway	Inc. 1L rec can, Inc. 50w R20, n/a	3	50	0.15	2,200	330	3	RL091/ckit - (1) recessed can kit, LED 9w, new trim face, 50,000 hour+ rated life at L70 ec	8	0.026	2,200	56	0.1245	274
Rf#-14 Rm - New Space W RR	1x4x 2L sm wp, F32T8 32w, electronic ballast	2	59	0.118	500	59	2	RLT82 - (2) LED 4' T8 lamp 12w, 50,000+ hour rated life at L70, (1) 2L LP electronic ballas/driver	19	0.037	500	19	0.0806	40
Rf#-15 Rm - New Space W RR	1x4x 2L sm wp, F32T8 32w, electronic ballast	2	59	0.118	500	59	2	RLT82 - (2) LED 4' T8 lamp 12w, 50,000+ hour rated life at L70, (1) 2L LP electronic ballas/driver	19	0.037	500	19	0.0806	40
Rf#-16 Rm - New space open area #2	2x4x 4L rec trf, F32T8 32w, electronic ballast	8	112	0.896	2,200	1,971	8	RLT83/r - (3) LED 4' T8 lamp 12w, 50,000+ hour rated life at L70, (1) 2L LP electronic ballas/driver, (1) 2x4 RFL C1	28	0.225	1,870	420	0.6714	1,551
Rf#-17 Rm - New space open area #3	1x4x 2L pm ind/dir, F32T8 32w, electronic ballast	12	59	0.708	2,200	1,558	12	RLT82 - (2) LED 4' T8 lamp 12w, 50,000+ hour rated life at L70, (1) 2L LP electronic ballas/driver C1	19	0.225	1,870	420	0.4834	1,138
Rf#-18 Rm - New space Conference Room	2x4x 4L rec trf, F32T8 32w, electronic ballast	3	112	0.336	2,200	739	3	RLT83/r - (3) LED 4' T8 lamp 12w, 50,000+ hour rated life at L70, (1) 2L LP electronic ballas/driver, (1) 2x4 RFL	28	0.084	2,200	185	0.2518	554
Rf#-19 Rm - MISGIS entry	1x4x 4L sm wp, F40T12 34w, magnetic ballast	1	144	0.144	1,800	259	1	NF331/4w - New 4' wrap w/3 LED T8 12w lamps, (1) 3L LP electronic ballast	28	0.028	1,800	51	0.1159	209
Rf#-20 Rm - MISGIS office	1x4x 2L sm wp, F40T12 34w, magnetic ballast	2	72	0.144	1,800	259	2	NF331/4w - New 4' wrap w/3 LED T8 12w lamps, (1) 3L LP electronic ballast	28	0.056	1,800	101	0.0878	158
Rf#-21 Rm - ext-building mounted	Inc. 1L wm globe, Inc. 60w A19, n/a	3	60	0.18	4,380	788	3	NL012/wp - New LED wall pack, 50,000 hour L70 rated life, 12w	12	0.036	4,380	158	0.144	631

W* = wall switch sensor; C* = ceiling sensor; E* = existing sensor, L* Dimming Control

Library - 1020 W Palomino Rd., Chino Valley, AZ 86323

PRE-RETROFIT							POST RETROFIT								
Location	Existing Fixture Description	Qty	Wt/Fxt	kW	Hours	kWh	Qty	Retrofit Code Description (Sensor in RED)	Wt/Fxt	kW	Hours	kWh	kW Svd	kWh Svd
Rf#-22 Rm - ext-building mounted	HPS 1L wm wall pack small, HPS 70w, HID ballast	1	95	0.095	4,380	416	1	NL030/wp/fc - New LED wall pack, 50,000 hour L70 rated life, 30w	30	0.03	4,380	131	0.065	285
Rf#-23 Rm - ext-pole mounted	HPS 1L cobra head PC, HPS 250w, HID ballast	2	295	0.59	4,380	2,584	2	NL072/p/s - New area light pole or bldg mnt 72w, 100,000+ hour rated life at L70, on board occ sensor	72	0.144	4,380	631	0.446	1,953
Rf#-24 Rm - ext-building mounted	HPS 1L wm wall pack PCO, HPS 100w, HID ballast	4	130	0.52	4,380	2,278	4	NL030/wp/fc - New LED wall pack, 50,000 hour L70 rated life, 30w	30	0.12	4,380	526	0.4	1,752
Rf#-25 Rm - ext-building mounted (book	HPS 1L sm square drop lens, HPS 100w, HID ballast	1	130	0.13	4,380	569	1	NL030/sq - New LED surface mounted square, 50,000 hour L70 rated life, 30w	30	0.03	4,380	131	0.1	438
Rf#-26 Rm - ext-building mounted	Inc. 2L can flood, Inc. 60w A19, n/a	3	120	0.36	4,380	1,577	3	NL030/wp/ft - New LED wall pack, 50,000 hour L70 rated life, 30w	30	0.09	4,380	394	0.27	1,183
Rf#-27 Rm - ext-building mounted (south	CF 1L rec square, CF 15w, CFL ballast	5	15	0.075	4,380	329	5	NL030/sq - New LED surface mounted square, 50,000 hour L70 rated life, 30w	30	0.15	4,380	657	-0.075	-328
	Qty and kW for Library :	**146**		**16.7**			**146**			**3.8**			**12.9**	
		kWh for Library :				**41,311**						**9,421**		**31,889**

Old Food Bank Bldg - did PD take over? - 1943 Voss Dr., Chino Valley, AZ 86323

PRE-RETROFIT							POST RETROFIT							
Location	Existing Fixture Description	Qty	Wt/Fxt	kW	Hours	kWh	Qty	Retrofit Code Description (Sensor in RED)	Wt/Fxt	kW	Hours	kWh	kW Svd	kWh Svd
Building/Area: Main Building														
1st Floor														
Rf#-1 Rm - entry area	1x4x 2L sm wp, F40T12 34w, magnetic ballast	2	72	0.144	800	115	2	RLT82 - (2) LED 4' T8 lamp 12w, 50,000+ hour rated life at L70, (1) 2L LP electronic ballas/driver	19	0.037	800	30	0.1066	85
Rf#-2 Rm - Garage bay #1	1x4x 2L sm wp, F40T12 34w, magnetic ballast	4	72	0.288	800	230	4	RLT82 - (2) LED 4' T8 lamp 12w, 50,000+ hour rated life at L70, (1) 2L LP electronic ballas/driver	19	0.075	800	60	0.2131	170
Rf#-3 Rm - RR #1	Inc. 1L sm dome, Inc. 60w A19, n/a	2	60	0.12	500	60	2	RL091/s - (1) LED 9w A19 screw in lamp	9	0.018	500	9	0.102	51
Rf#-4 Rm - RR #2	Inc. 1L sm dome, Inc. 60w A19, n/a	2	60	0.12	500	60	2	RL091/s - (1) LED 9w A19 screw in lamp	9	0.018	500	9	0.102	51
Rf#-5 Rm - Garage bay #2	1x4x 2L sm wp, F40T12 34w, magnetic ballast	4	72	0.288	800	230	4	RLT82 - (2) LED 4' T8 lamp 12w, 50,000+ hour rated life at L70, (1) 2L LP electronic ballas/driver	19	0.075	800	60	0.2131	170
Rf#-6 Rm - ext-building mounted	Inc. 1L wm lantern, Inc. 60w A19, n/a	3	60	0.18	4,380	788	3	RL091/s - (1) LED 9w A19 screw in lamp	9	0.027	4,380	118	0.153	670
y and kW for Old Food Bank Bldg - did PD take over? :		**17**		**1.1**			**17**			**0.3**			**0.9**	
kWh for Old Food Bank Bldg - did PD take over? :						**1,484**						**286**		**1,197**

W* = wall switch sensor; C* = ceiling sensor; E* = existing sensor, L* Dimming Control

Other Pumps / Wells -

PRE-RETROFIT							POST RETROFIT							
Location	Existing Fixture Description	Qty	Wt/Fxt	kW	Hours	kWh	Qty	Retrofit Code Description (Sensor in RED)	Wt/Fxt	kW	Hours	kWh	kW Svd	kWh Svd
Building/Area: All Buildings														
1st Floor														
Rf#-1 Rm - All Interior Space	DND (do not do, left as is), n/a, n/a		0	0	1,500	0	0	DND - DND: (do not do, fixtures left as is)	0	0	1,500	0	0	0
Rf#-2 Rm - All Exterior Space	DND (do not do, left as is), n/a, n/a		0	0	4,380	0	0	DND - DND: (do not do, fixtures left as is)	0	0	4,380	0	0	0
Qty and kW for Other Pumps / Wells :				**0.0**						**0.0**			**0.0**	
kWh for Other Pumps / Wells :														

W* = wall switch sensor; C* = ceiling sensor; E* = existing sensor, L* Dimming Control

Town of Chino Valley - Lighting Detail Report

(sorted by building, floor, area)

Parks -

PRE-RETROFIT							POST RETROFIT							
Location	Existing Fixture Description	Qty	Wt/Fxt	kW	Hours	kWh	Qty	Retrofit Code Description (Sensor in RED)	Wt/Fxt	kW	Hours	kWh	kW Svd	kWh Svd
Building/Area: Memory Park														
1st Floor														
Rf#-1 Rm - M RR	1x4x 2L sm strip, F40T12 34w, magnetic ballast	1	72	0.072	2,000	144	1	NL040/4vt - New 4' vapor tight w/2 LED T8 12w lamps, (1) 2L LP electronic ballast	19	0.019	2,000	37	0.0533	107
Rf#-2 Rm - W RR	1x4x 2L sm strip, F40T12 34w, magnetic ballast	1	72	0.072	2,000	144	1	NL040/4vt - New 4' vapor tight w/2 LED T8 12w lamps, (1) 2L LP electronic ballast	19	0.019	2,000	37	0.0533	107
Rf#-3 Rm - ext-building mounted (canopy)	HPS 1L sm square, HPS 100w, HID ballast	2	130	0.26	4,380	1,139	2	NL030/sq - New LED surface mounted square, 50,000 hour L70 rated life, 30w	30	0.06	4,380	263	0.2	876
Rf#-4 Rm - ext-building mounted (canopy)	HPS 1L wm wall pack PCO, HPS 100w, HID ballast	5	130	0.65	4,380	2,847	5	NL030/wp/fc - New LED wall pack, 50,000 hour L70 rated life, 30w	30	0.15	4,380	657	0.5	2,190
	Qty and kW for Parks :	**9**		**1.1**			**9**			**0.2**			**0.8**	
		kWh for Parks :				**4,274**						**994**		**3,280**

W* = wall switch sensor; C* = ceiling sensor; E* = existing sensor, L* Dimming Control

Police Department - 1950 Voss Dr, Bldg #301, Chino Valley, AZ 86323

PRE-RETROFIT							POST RETROFIT							
Location	Existing Fixture Description	Qty	Wt/Fxt	kW	Hours	kWh	Qty	Retrofit Code Description (Sensor in RED)	Wt/Fxt	kW	Hours	kWh	kW Svd	kWh Svd
Building/Area: Main Building														
1st Floor														
Rf#-1 Rm - main entry	2x4x 4L rec trf, F40T12 34w, magnetic ballast	2	144	0.288	3,500	1,008	2	RLT83/r - (3) LED 4' T8 lamp 12w, 50,000+ hour rated life at L70, (1) 2L LP electronic ballas/driver, (1) 2x4 RFL	28	0.056	3,500	197	0.2318	811
Rf#-2 Rm - Office #1	2x4x 4L rec trf, F40T12 34w, magnetic ballast	2	144	0.288	2,500	720	2	RLT83/r - (3) LED 4' T8 lamp 12w, 50,000+ hour rated life at L70, (1) 2L LP electronic ballas/driver, (1) 2x4 RFL	28	0.056	2,500	140	0.2318	580
Rf#-3 Rm - Office #2	2x4x 4L rec trf, F40T12 34w, magnetic ballast	2	144	0.288	2,500	720	2	RLT83/r - (3) LED 4' T8 lamp 12w, 50,000+ hour rated life at L70, (1) 2L LP electronic ballas/driver, (1) 2x4 RFL	28	0.056	2,500	140	0.2318	580
Rf#-4 Rm - Office #3	2x4x 4L rec trf, F40T12 34w, magnetic ballast	2	144	0.288	2,500	720	2	RLT83/r - (3) LED 4' T8 lamp 12w, 50,000+ hour rated life at L70, (1) 2L LP electronic ballas/driver, (1) 2x4 RFL	28	0.056	2,500	140	0.2318	580
Rf#-5 Rm - Office #4	2x4x 4L rec trf, F40T12 34w, magnetic ballast	1	144	0.144	2,500	360	1	RLT83/r - (3) LED 4' T8 lamp 12w, 50,000+ hour rated life at L70, (1) 2L LP electronic ballas/driver, (1) 2x4 RFL	28	0.028	2,500	70	0.1159	290
Rf#-6 Rm - Office #5	2x4x 4L rec trf, F40T12 34w, magnetic ballast	4	144	0.576	2,500	1,440	4	RLT83/r - (3) LED 4' T8 lamp 12w, 50,000+ hour rated life at L70, (1) 2L LP electronic ballas/driver, (1) 2x4 RFL	28	0.112	2,500	281	0.4637	1,159
Rf#-7 Rm - Conference room	2x4x 4L rec trf, F40T12 34w, magnetic ballast	2	144	0.288	1,800	518	2	RLT83/r - (3) LED 4' T8 lamp 12w, 50,000+ hour rated life at L70, (1) 2L LP electronic ballas/driver, (1) 2x4 RFL	28	0.056	1,800	101	0.2318	417
Rf#-8 Rm - small break room	2x4x 4L rec trf, F40T12 34w, magnetic ballast	2	144	0.288	1,800	518	2	RLT83/r - (3) LED 4' T8 lamp 12w, 50,000+ hour rated life at L70, (1) 2L LP electronic ballas/driver, (1) 2x4 RFL	28	0.056	1,800	101	0.2318	417
Rf#-9 Rm - large open area	2x4x 4L rec trf, F40T12 34w, magnetic ballast	10	144	1.44	3,500	5,040	10	RLT83/r - (3) LED 4' T8 lamp 12w, 50,000+ hour rated life at L70, (1) 2L LP electronic ballas/driver, (1) 2x4 RFL	28	0.281	2,975	835	1.1592	4,205
Rf#-10 Rm - Office #6	2x4x 4L rec trf, F40T12 34w, magnetic ballast	5	144	0.72	2,500	1,800	5	RLT83/r - (3) LED 4' T8 lamp 12w, 50,000+ hour rated life at L70, (1) 2L LP electronic ballas/driver, (1) 2x4 RFL	28	0.140	2,500	351	0.5796	1,449
Rf#-11 Rm - armory	2x4x 4L rec trf, F40T12 34w, magnetic ballast	2	144	0.288	800	230	2	RLT83/r - (3) LED 4' T8 lamp 12w, 50,000+ hour rated life at L70, (1) 2L LP electronic ballas/driver, (1) 2x4 RFL	28	0.056	800	45	0.2318	185
Rf#-12 Rm - Cell's vestibule area	2x4x 4L rec trf, F40T12 34w, magnetic ballast	2	144	0.288	300	86	2	RLT83/r - (3) LED 4' T8 lamp 12w, 50,000+ hour rated life at L70, (1) 2L LP electronic ballas/driver, (1) 2x4 RFL	28	0.056	300	17	0.2318	70
Rf#-13 Rm - Cell #1	Inc. 2L sm square 12", Inc. 60w A19, n/a	1	120	0.12	300	36	1	RL091/s - (1) LED 9w A19 screw in lamp	9	0.009	300	3	0.111	33
Rf#-14 Rm - Cell #2	Inc. 2L sm square 12", Inc. 60w A19, n/a	1	120	0.12	300	36	1	RL091/s - (1) LED 9w A19 screw in lamp	9	0.009	300	3	0.111	33
Rf#-15 Rm - break room/RR hallway	2x4x 4L rec trf, F40T12 34w, magnetic ballast	2	144	0.288	1,500	432	2	RLT83/r - (3) LED 4' T8 lamp 12w, 50,000+ hour rated life at L70, (1) 2L LP electronic ballas/driver, (1) 2x4 RFL	28	0.056	1,500	84	0.2318	348
Rf#-16 Rm - break room/RR hallway	2x4x 4L rec trf, F32T8 32w, electronic ballast	1	112	0.112	1,500	168	1	RLT83/r - (3) LED 4' T8 lamp 12w, 50,000+ hour rated life at L70, (1) 2L LP electronic ballas/driver, (1) 2x4 RFL	28	0.028	1,500	42	0.0839	126
Rf#-17 Rm - M RR	1x2x 2L wm vanity, F20T12 20w, magnetic ballast	1	50	0.05	500	25	1	RLT82(2) - (2) LED 2' T8 lamp 8w, 50,000+ hour rated life at L70, (1) 2L LP electronic ballas/driver	12	0.012	500	6	0.0375	19
Rf#-18 Rm - W RR	1x2x 2L wm vanity, F20T12 20w, magnetic ballast	1	50	0.05	500	25	1	RLT82(2) - (2) LED 2' T8 lamp 8w, 50,000+ hour rated life at L70, (1) 2L LP electronic ballas/driver	12	0.012	500	6	0.0375	19
Rf#-19 Rm - reception area	Inc. 1L track light, Inc. 60w A19, n/a	7	60	0.42	8,760	3,679	7	RL091/s - (1) LED 9w A19 screw in lamp	9	0.063	8,760	552	0.357	3,127
Rf#-20 Rm - reception area	CF 1L track light, CF 15w, CFL ballast	7	15	0.105	8,760	920	7	RL091/s - (1) LED 9w A19 screw in lamp	9	0.063	8,760	552	0.042	368
Rf#-21 Rm - ext-building mounted	HPS 1L wm wall pack PCO, HPS 100w, HID ballast	1	130	0.13	4,380	569	1	NL030/wp/fc - New LED wall pack, 50,000 hour L70 rated life, 30w	30	0.03	4,380	131	0.1	438

W* = wall switch sensor; C* = ceiling sensor; E* = existing sensor, L* Dimming Control

Town of Chino Valley - Lighting Detail Report

(sorted by building, floor, area)

Police Department - 1950 Voss Dr, Bldg #301, Chino Valley, AZ 86323

PRE-RETROFIT							POST RETROFIT								
Location	**Existing Fixture Description**	**Qty**	**Wt/Fxt**	**kW**	**Hours**	**kWh**	**Qty**	**Retrofit Code Description (Sensor in RED)**	**Wt/Fxt**	**kW**	**Hours**	**kWh**	**kW Svd**	**kWh Svd**
Rf#-22 Rm - ext-building mounted	HPS 1L wm wall pack FT, HPS 150w, HID ballast	1	195	0.195	4,380	854	1	NL030/wp/ft - New LED wall pack, 50,000 hour L70 rated life, 30w	30	0.03	4,380	131	0.165	723
Rf#-23 Rm - ext-building mounted	Inc. 1L jelly jar, Inc. 60w A19, n/a	2	60	0.12	4,380	526	2	NL012/wp - New LED wall pack, 50,000 hour L70 rated life, 12w	12	0.024	4,380	105	0.096	420
Rf#-24 Rm - ext-pole mounted	HPS 1L cobra head PC, HPS 250w, HID ballast	3	295	0.885	4,380	3,876	3	NL072/p/s - New area light pole or bldg mnt 72w, 100,000+ hour rated life at L70, on board occ sensor	72	0.216	4,380	946	0.669	2,930
Rf#-25 Rm - ext-pole mounted	HPS 1L shoe box, SqP, DB, 2SH, HPS 250w, HID ballast	2	295	0.59	4,380	2,584	2	NL072/p/s - New area light pole or bldg mnt 72w, 100,000+ hour rated life at L70, on board occ sensor	72	0.144	4,380	631	0.446	1,953
Qty and kW for Police Department :		**66**		**8.4**			**66**			**1.7**			**6.7**	
kWh for Police Department :						**26,892**						**5,610**		**21,280**

W* = wall switch sensor; C* = ceiling sensor; E* = existing sensor, L* Dimming Control

Other Pumps / Wells -

PRE-RETROFIT							POST RETROFIT							
Location	Existing Fixture Description	Qty	Wt/Fxt	kW	Hours	kWh	Qty	Retrofit Code Description (Sensor in RED)	Wt/Fxt	kW	Hours	kWh	kW Svd	kWh Svd
Building/Area: All Buildings														
1st Floor														
Rf#-1 Rm - All Interior Space	DND (do not do, left as is), n/a, n/a		0	0	1,500	0	0	DND - DND: (do not do, fixtures left as is)	0	0	1,500	0	0	0
Rf#-2 Rm - All Exterior Space	DND (do not do, left as is), n/a, n/a		0	0	4,380	0	0	DND - DND: (do not do, fixtures left as is)	0	0	4,380	0	0	0

Qty and kW for Other Pumps / Wells : **0.0** **0.0** **0.0**

kWh for Other Pumps / Wells :

W* = wall switch sensor; C* = ceiling sensor; E* = existing sensor, L* Dimming Control

Town of Chino Valley - Lighting Detail Report

(sorted by building, floor, area)

Parks -

PRE-RETROFIT							POST RETROFIT							
Location	Existing Fixture Description	Qty	Wt/Fxt	kW	Hours	kWh	Qty	Retrofit Code Description (Sensor in RED)	Wt/Fxt	kW	Hours	kWh	kW Svd	kWh Svd
Building/Area: Memory Park														
1st Floor														
Rf#-1 Rm - M RR	1x4x 2L sm strip, F40T12 34w, magnetic ballast	1	72	0.072	2,000	144	1	NL040/4vt - New 4' vapor tight w/2 LED T8 12w lamps, (1) 2L LP electronic ballast	19	0.019	2,000	37	0.0533	107
Rf#-2 Rm - W RR	1x4x 2L sm strip, F40T12 34w, magnetic ballast	1	72	0.072	2,000	144	1	NL040/4vt - New 4' vapor tight w/2 LED T8 12w lamps, (1) 2L LP electronic ballast	19	0.019	2,000	37	0.0533	107
Rf#-3 Rm - ext-building mounted (canopy)	HPS 1L sm square, HPS 100w, HID ballast	2	130	0.26	4,380	1,139	2	NL030/sq - New LED surface mounted square, 50,000 hour L70 rated life, 30w	30	0.06	4,380	263	0.2	876
Rf#-4 Rm - ext-building mounted (canopy)	HPS 1L wm wall pack PCO, HPS 100w, HID ballast	5	130	0.65	4,380	2,847	5	NL030/wp/fc - New LED wall pack, 50,000 hour L70 rated life, 30w	30	0.15	4,380	657	0.5	2,190
	Qty and kW for Parks :	**9**		**1.1**			**9**			**0.2**			**0.8**	
		kWh for Parks :				**4,274**						**994**		**3,280**

W* = wall switch sensor; C* = ceiling sensor; E* = existing sensor, L* Dimming Control

Town of Chino Valley - Lighting Detail Report

(sorted by building, floor, area)

Police Department - 1950 Voss Dr, Bldg #301, Chino Valley, AZ 86323

PRE-RETROFIT							POST RETROFIT								
Location	Existing Fixture Description	Qty	Wt/Fxt	kW	Hours	kWh	Qty	Retrofit Code Description (Sensor in RED)	Wt/Fxt	kW	Hours	kWh	kW Svd	kWh Svd
Building/Area: Main Building														
1st Floor														
Rf#-1 Rm - main entry	2x4x 4L rec trf, F40T12 34w, magnetic ballast	2	144	0.288	3,500	1,008	2	RLT83/r - (3) LED 4' T8 lamp 12w, 50,000+ hour rated life at L70, (1) 2L LP electronic ballas/driver, (1) 2x4 RFL	28	0.056	3,500	197	0.2318	811
Rf#-2 Rm - Office #1	2x4x 4L rec trf, F40T12 34w, magnetic ballast	2	144	0.288	2,500	720	2	RLT83/r - (3) LED 4' T8 lamp 12w, 50,000+ hour rated life at L70, (1) 2L LP electronic ballas/driver, (1) 2x4 RFL	28	0.056	2,500	140	0.2318	580
Rf#-3 Rm - Office #2	2x4x 4L rec trf, F40T12 34w, magnetic ballast	2	144	0.288	2,500	720	2	RLT83/r - (3) LED 4' T8 lamp 12w, 50,000+ hour rated life at L70, (1) 2L LP electronic ballas/driver, (1) 2x4 RFL	28	0.056	2,500	140	0.2318	580
Rf#-4 Rm - Office #3	2x4x 4L rec trf, F40T12 34w, magnetic ballast	2	144	0.288	2,500	720	2	RLT83/r - (3) LED 4' T8 lamp 12w, 50,000+ hour rated life at L70, (1) 2L LP electronic ballas/driver, (1) 2x4 RFL	28	0.056	2,500	140	0.2318	580
Rf#-5 Rm - Office #4	2x4x 4L rec trf, F40T12 34w, magnetic ballast	1	144	0.144	2,500	360	1	RLT83/r - (3) LED 4' T8 lamp 12w, 50,000+ hour rated life at L70, (1) 2L LP electronic ballas/driver, (1) 2x4 RFL	28	0.028	2,500	70	0.1159	290
Rf#-6 Rm - Office #5	2x4x 4L rec trf, F40T12 34w, magnetic ballast	4	144	0.576	2,500	1,440	4	RLT83/r - (3) LED 4' T8 lamp 12w, 50,000+ hour rated life at L70, (1) 2L LP electronic ballas/driver, (1) 2x4 RFL	28	0.112	2,500	281	0.4637	1,159
Rf#-7 Rm - Conference room	2x4x 4L rec trf, F40T12 34w, magnetic ballast	2	144	0.288	1,800	518	2	RLT83/r - (3) LED 4' T8 lamp 12w, 50,000+ hour rated life at L70, (1) 2L LP electronic ballas/driver, (1) 2x4 RFL	28	0.056	1,800	101	0.2318	417
Rf#-8 Rm - small break room	2x4x 4L rec trf, F40T12 34w, magnetic ballast	2	144	0.288	1,800	518	2	RLT83/r - (3) LED 4' T8 lamp 12w, 50,000+ hour rated life at L70, (1) 2L LP electronic ballas/driver, (1) 2x4 RFL	28	0.056	1,800	101	0.2318	417
Rf#-9 Rm - large open area	2x4x 4L rec trf, F40T12 34w, magnetic ballast	10	144	1.44	3,500	5,040	10	RLT83/r - (3) LED 4' T8 lamp 12w, 50,000+ hour rated life at L70, (1) 2L LP electronic ballas/driver, (1) 2x4 RFL	28	0.281	2,975	835	1.1592	4,205
Rf#-10 Rm - Office #6	2x4x 4L rec trf, F40T12 34w, magnetic ballast	5	144	0.72	2,500	1,800	5	RLT83/r - (3) LED 4' T8 lamp 12w, 50,000+ hour rated life at L70, (1) 2L LP electronic ballas/driver, (1) 2x4 RFL	28	0.140	2,500	351	0.5796	1,449
Rf#-11 Rm - armory	2x4x 4L rec trf, F40T12 34w, magnetic ballast	2	144	0.288	800	230	2	RLT83/r - (3) LED 4' T8 lamp 12w, 50,000+ hour rated life at L70, (1) 2L LP electronic ballas/driver, (1) 2x4 RFL	28	0.056	800	45	0.2318	185
Rf#-12 Rm - Cell's vestibule area	2x4x 4L rec trf, F40T12 34w, magnetic ballast	2	144	0.288	300	86	2	RLT83/r - (3) LED 4' T8 lamp 12w, 50,000+ hour rated life at L70, (1) 2L LP electronic ballas/driver, (1) 2x4 RFL	28	0.056	300	17	0.2318	70
Rf#-13 Rm - Cell #1	Inc. 2L sm square 12", Inc. 60w A19, n/a	1	120	0.12	300	36	1	RL091/s - (1) LED 9w A19 screw in lamp	9	0.009	300	3	0.111	33
Rf#-14 Rm - Cell #2	Inc. 2L sm square 12", Inc. 60w A19, n/a	1	120	0.12	300	36	1	RL091/s - (1) LED 9w A19 screw in lamp	9	0.009	300	3	0.111	33
Rf#-15 Rm - break room/RR hallway	2x4x 4L rec trf, F40T12 34w, magnetic ballast	2	144	0.288	1,500	432	2	RLT83/r - (3) LED 4' T8 lamp 12w, 50,000+ hour rated life at L70, (1) 2L LP electronic ballas/driver, (1) 2x4 RFL	28	0.056	1,500	84	0.2318	348
Rf#-16 Rm - break room/RR hallway	2x4x 4L rec trf, F32T8 32w, electronic ballast	1	112	0.112	1,500	168	1	RLT83/r - (3) LED 4' T8 lamp 12w, 50,000+ hour rated life at L70, (1) 2L LP electronic ballas/driver, (1) 2x4 RFL	28	0.028	1,500	42	0.0839	126
Rf#-17 Rm - M RR	1x2x 2L wm vanity, F20T12 20w, magnetic ballast	1	50	0.05	500	25	1	RLT82(2) - (2) LED 2' T8 lamp 8w, 50,000+ hour rated life at L70, (1) 2L LP electronic ballas/driver	12	0.012	500	6	0.0375	19
Rf#-18 Rm - W RR	1x2x 2L wm vanity, F20T12 20w, magnetic ballast	1	50	0.05	500	25	1	RLT82(2) - (2) LED 2' T8 lamp 8w, 50,000+ hour rated life at L70, (1) 2L LP electronic ballas/driver	12	0.012	500	6	0.0375	19
Rf#-19 Rm - reception area	Inc. 1L track light, Inc. 60w A19, n/a	7	60	0.42	8,760	3,679	7	RL091/s - (1) LED 9w A19 screw in lamp	9	0.063	8,760	552	0.357	3,127
Rf#-20 Rm - reception area	CF 1L track light, CF 15w, CFL ballast	7	15	0.105	8,760	920	7	RL091/s - (1) LED 9w A19 screw in lamp	9	0.063	8,760	552	0.042	368
Rf#-21 Rm - ext-building mounted	HPS 1L wm wall pack PCO, HPS 100w, HID ballast	1	130	0.13	4,380	569	1	NL030/wp/fc - New LED wall pack, 50,000 hour L70 rated life, 30w	30	0.03	4,380	131	0.1	438

W* = wall switch sensor; C* = ceiling sensor; E* = existing sensor, L* Dimming Control

Town of Chino Valley - Lighting Detail Report

(sorted by building, floor, area)

Police Department - 1950 Voss Dr, Bldg #301, Chino Valley, AZ 86323

PRE-RETROFIT							POST RETROFIT								
Location	Existing Fixture Description	Qty	Wt/Fxt	kW	Hours	kWh	Qty	Retrofit Code Description (Sensor in RED)	Wt/Fxt	kW	Hours	kWh	kW Svd	kWh Svd
Rf#-22 Rm - ext-building mounted	HPS 1L wm wall pack FT, HPS 150w, HID ballast	1	195	0.195	4,380	854	1	NL030/wp/ft - New LED wall pack, 50,000 hour L70 rated life, 30w	30	0.03	4,380	131	0.165	723
Rf#-23 Rm - ext-building mounted	Inc. 1L jelly jar, Inc. 60w A19, n/a	2	60	0.12	4,380	526	2	NL012/wp - New LED wall pack, 50,000 hour L70 rated life, 12w	12	0.024	4,380	105	0.096	420
Rf#-24 Rm - ext-pole mounted	HPS 1L cobra head PC, HPS 250w, HID ballast	3	295	0.885	4,380	3,876	3	NL072/p/s - New area light pole or bldg mnt 72w, 100,000+ hour rated life at L70, on board occ sensor	72	0.216	4,380	946	0.669	2,930
Rf#-25 Rm - ext-pole mounted	HPS 1L shoe box, SqP, DB, 2SH, HPS 250w, HID ballast	2	295	0.59	4,380	2,584	2	NL072/p/s - New area light pole or bldg mnt 72w, 100,000+ hour rated life at L70, on board occ sensor	72	0.144	4,380	631	0.446	1,953
Qty and kW for Police Department :		**66**		**8.4**			**66**			**1.7**			**6.7**	
kWh for Police Department :						**26,892**						**5,610**		**21,280**

W* = wall switch sensor; C* = ceiling sensor; E* = existing sensor, L* Dimming Control

Police Dept - Shooting Range - confirm - 2178 Sgt Dee Barnes Way Chino Valley, AZ 86323

PRE-RETROFIT							POST RETROFIT							
Location	Existing Fixture Description	Qty	Wt/Fxt	kW	Hours	kWh	Qty	Retrofit Code Description (Sensor in RED)	Wt/Fxt	kW	Hours	kWh	kW Svd	kWh Svd
Building/Area: All Buildings														
1st Floor														
Rf#-1 Rm - All Interior Space	DND (do not do, left as is), n/a, n/a		0	0	1,500	0	0	DND - DND: (do not do, fixtures left as is)	0	0	1,500	0	0	0
Rf#-2 Rm - All Exterior Space	DND (do not do, left as is), n/a, n/a		0	0	4,380	0	0	DND - DND: (do not do, fixtures left as is)	0	0	4,380	0	0	0
ty and kW for Police Dept - Shooting Range - confirm :				**0.0**						**0.0**			**0.0**	
	kWh for Police Dept - Shooting Range - confirm :													

Pool - Aquatics Bldg & Ball Fields - 1615 N Road 1 East, Chino Valley, AZ 86323

PRE-RETROFIT							POST RETROFIT							
Location	Existing Fixture Description	Qty	Wt/Fxt	kW	Hours	kWh	Qty	Retrofit Code Description (Sensor in RED)	Wt/Fxt	kW	Hours	kWh	kW Svd	kWh Svd
Building/Area: Concessions														
1st Floor														
Rf#-24 Rm - Kitchen	1x4x 2L sm wp, F32T8 32w, electronic ballast	9	59	0.531	1,200	637	9	RLT82 - (2) LED 4' T8 lamp 12w, 50,000+ hour rated life at L70, (1) 2L LP electronic ballas/driver	19	0.168	1,200	202	0.3625	435
Rf#-25 Rm - M RR	1x4x 2L sm wp, F32T8 32w, electronic ballast	6	59	0.354	500	177	6	RLT82 - (2) LED 4' T8 lamp 12w, 50,000+ hour rated life at L70, (1) 2L LP electronic ballas/driver	19	0.112	500	56	0.2417	121
Rf#-26 Rm - W RR	1x4x 2L sm wp, F32T8 32w, electronic ballast	6	59	0.354	500	177	6	RLT82 - (2) LED 4' T8 lamp 12w, 50,000+ hour rated life at L70, (1) 2L LP electronic ballas/driver	19	0.112	500	56	0.2417	121
Rf#-27 Rm - equipment room	1x4x 2L sm wp, F32T8 32w, electronic ballast	1	59	0.059	300	18	1	RLT82 - (2) LED 4' T8 lamp 12w, 50,000+ hour rated life at L70, (1) 2L LP electronic ballas/driver	19	0.019	300	6	0.0403	12
Rf#-28 Rm - 2nd Floor viewing area	1x4x 2L rec trf, F32T8 32w, electronic ballast	12	59	0.708	1,500	1,062	12	RLT82 - (2) LED 4' T8 lamp 12w, 50,000+ hour rated life at L70, (1) 2L LP electronic ballas/driver	19	0.225	1,500	337	0.4834	725
Rf#-29 Rm - ext-building mounted	CF 1L wm wall pack FCO, CF 32w, CFL ballast		35	0	4,380	0	0	RL0131/hh - (1) New LED 4 pin 13w lamp, 50,000 hour rated life at L70, (1) new CFL/LED driver	13	0	4,380	0	0	0
Rf#-30 Rm - ext-pole mounted (to and away	HPS 1L post top lantern, HPS 150w, HID ballast	15	195	2.925	4,380	12,812	15	RL036/s/tg - (1) LED 36w screw in lamp 120/277v, 50,000 hour rated life at L70	36	0.54	4,380	2,365	2.385	10,446
Building/Area: Main Building														
1st Floor														
Rf#-1 Rm - entry area	CFL 1L pm can, CF 32w, CFL ballast	4	35	0.14	1,500	210	4	RL0131/hv - (1) New LED 4 pin 13w lamp, 50,000 hour rated life at L70, (1) new CFL/LED driver	13	0.052	1,500	78	0.088	132
Rf#-2 Rm - M RR	1x4x 2L sm wp, F32T8 32w, electronic ballast	1	59	0.059	1,200	71	1	RLT82 - (2) LED 4' T8 lamp 12w, 50,000+ hour rated life at L70, (1) 2L LP electronic ballas/driver	19	0.019	1,200	22	0.0403	48
Rf#-3 Rm - W RR	1x4x 2L sm wp, F32T8 32w, electronic ballast	1	59	0.059	1,200	71	1	RLT82 - (2) LED 4' T8 lamp 12w, 50,000+ hour rated life at L70, (1) 2L LP electronic ballas/driver	19	0.019	1,200	22	0.0403	48
Rf#-4 Rm - meeting/break room	2x4x 3L rec trf, F32T8 32w, electronic ballast	12	90	1.08	1,500	1,620	12	RLT83 - (3) LED 4' T8 lamp 12w, 50,000+ hour rated life at L70, (1) 2L LP electronic ballas/driver	28	0.337	1,500	505	0.7430	1,115
Rf#-5 Rm - office	2x4x 3L rec trf, F32T8 32w, electronic ballast	4	90	0.36	1,500	540	4	RLT83 - (3) LED 4' T8 lamp 12w, 50,000+ hour rated life at L70, (1) 2L LP electronic ballas/driver	28	0.112	1,500	168	0.2477	372
Rf#-6 Rm - Life Guard Office	1x4x 2L sm wp, F32T8 32w, electronic ballast	2	59	0.118	1,500	177	2	RLT82 - (2) LED 4' T8 lamp 12w, 50,000+ hour rated life at L70, (1) 2L LP electronic ballas/driver	19	0.037	1,500	56	0.0806	121
Rf#-7 Rm - Office #1	2x4x 3L rec trf, F32T8 32w, electronic ballast	2	90	0.18	1,500	270	2	RLT83 - (3) LED 4' T8 lamp 12w, 50,000+ hour rated life at L70, (1) 2L LP electronic ballas/driver	28	0.056	1,500	84	0.1238	186
Rf#-8 Rm - Office #1	2x4x 3L rec trf, F32T8 32w, electronic ballast	2	90	0.18	1,500	270	2	RLT83 - (3) LED 4' T8 lamp 12w, 50,000+ hour rated life at L70, (1) 2L LP electronic ballas/driver	28	0.056	1,500	84	0.1238	186
Rf#-9 Rm - Pool viewing room	CFL 1L pm can, CF 32w, CFL ballast	2	35	0.07	1,500	105	2	RL0131/hv - (1) New LED 4 pin 13w lamp, 50,000 hour rated life at L70, (1) new CFL/LED driver	13	0.026	1,500	39	0.044	66
Rf#-10 Rm - hallway to lockers	CF 1L wm oval, CF 32w, CFL ballast	4	35	0.14	1,500	210	4	RL0131/hh - (1) New LED 4 pin 13w lamp, 50,000 hour rated life at L70, (1) new CFL/LED driver	13	0.052	1,500	78	0.088	132
Rf#-11 Rm - M locker room	1x4x 2L sm vapor tight, F32T8 32w, electronic ballast	9	59	0.531	1,200	637	9	RLT82 - (2) LED 4' T8 lamp 12w, 50,000+ hour rated life at L70, (1) 2L LP electronic ballas/driver	19	0.168	1,200	202	0.3625	435
Rf#-12 Rm - W locker Room	1x4x 2L sm vapor tight, F32T8 32w, electronic ballast	9	59	0.531	1,200	637	9	RLT82 - (2) LED 4' T8 lamp 12w, 50,000+ hour rated life at L70, (1) 2L LP electronic ballas/driver	19	0.168	1,200	202	0.3625	435

W* = wall switch sensor; C* = ceiling sensor; E* = existing sensor, L* Dimming Control

Pool - Aquatics Bldg & Ball Fields - 1615 N Road 1 East, Chino Valley, AZ 86323

PRE-RETROFIT							POST RETROFIT							
Location	Existing Fixture Description	Qty	Wt/Fxt	kW	Hours	kWh	Qty	Retrofit Code Description (Sensor in RED)	Wt/Fxt	kW	Hours	kWh	kW Svd	kWh Svd
Rf#-13 Rm - Family Restroom	1x4x 2L sm vapor tight, F32T8 32w, electronic ballast	1	59	0.059	500	30	1	RLT82 - (2) LED 4' T8 lamp 12w, 50,000+ hour rated life at L70, (1) 2L LP electronic ballas/driver	19	0.019	500	9	0.0403	20
Rf#-14 Rm - equipment room	1x4x 2L sm strip, F32T8 32w, electronic ballast	1	59	0.059	500	30	1	RLT82 - (2) LED 4' T8 lamp 12w, 50,000+ hour rated life at L70, (1) 2L LP electronic ballas/driver	19	0.019	500	9	0.0403	20
Rf#-15 Rm - ext-building mounted (pool	MH 1L wm shoe box, MH 250w, HID ballast	3	295	0.885	4,380	3,876	3	NL072/p/s - New area light pole or bldg mnt 72w, 100,000+ hour rated life at L70, on board occ sensor	72	0.216	4,380	946	0.669	2,930
Rf#-16 Rm - ext-pole mounted (pool area)	MH 1L shoe box, DB, 6SH, MH 250w, HID ballast	6	295	1.77	4,380	7,753	6	NL072/p/s - New area light pole or bldg mnt 72w, 100,000+ hour rated life at L70, on board occ sensor	72	0.432	4,380	1,892	1.338	5,860
Rf#-17 Rm - ext-building mounted	CFL 1L fixture, CF 15w, CFL ballast	3	15	0.045	4,380	197	3	RL0131/hh - (1) New LED 4 pin 13w lamp, 50,000 hour rated life at L70, (1) new CFL/LED driver	13	0.039	4,380	171	0.006	26
Rf#-18 Rm - ext-pole mounted (parking lot)	HPS 1L shoe box, RdP DB, 5SH, HPS 100w, HID ballast	5	130	0.65	4,380	2,847	5	NL054/p/s - New area light pole or bldg mnt 54w, 100,000+ hour rated life at L70, on board occ sensor	54	0.27	4,380	1,183	0.38	1,664
Rf#-19 Rm - ext-pole mounted (parking lot)	HPS 1L shoe box, RdP DB, 6DH, HPS 100w, HID ballast	12	130	1.56	4,380	6,833	12	NL054/p/s - New area light pole or bldg mnt 54w, 100,000+ hour rated life at L70, on board occ sensor	54	0.648	4,380	2,838	0.912	3,995

Building/Area: Pool Equipment

1st Floor

Rf#-20 Rm - equipment room	1x4x 2L sm vapor tight, F32T8 32w, electronic ballast	7	59	0.413	500	207	7	RLT82 - (2) LED 4' T8 lamp 12w, 50,000+ hour rated life at L70, (1) 2L LP electronic ballas/driver	19	0.131	500	66	0.282	141
Rf#-21 Rm - Chemical storage Room #1	1x4x 2L sm vapor tight, F32T8 32w, electronic ballast	1	59	0.059	300	18	1	RLT82 - (2) LED 4' T8 lamp 12w, 50,000+ hour rated life at L70, (1) 2L LP electronic ballas/driver	19	0.019	300	6	0.0403	12
Rf#-22 Rm - Chemical storage Room #2	1x4x 2L sm vapor tight, F32T8 32w, electronic ballast	1	59	0.059	300	18	1	RLT82 - (2) LED 4' T8 lamp 12w, 50,000+ hour rated life at L70, (1) 2L LP electronic ballas/driver	19	0.019	300	6	0.0403	12
Rf#-23 Rm - ext-building mount	MH 1L wm wall pack FCO, MH 175w, HID ballast	2	215	0.43	4,380	1,883	2	NL030/wp/fc - New LED wall pack, 50,000 hour L70 rated life, 30w	30	0.06	4,380	263	0.37	1,621

Qty and kW for Pool - Aquatics Bldg & Ball Fields : **143** **14.4** **143** **4.2** **10.2**

kWh for Pool - Aquatics Bldg & Ball Fields : **43,391** **11,951** **31,437**

W* = wall switch sensor; C* = ceiling sensor; E* = existing sensor, L* Dimming Control

Public Works - 1982 Voss Dr., Chino Valley, AZ 86323

PRE-RETROFIT							POST RETROFIT								
Location	Existing Fixture Description	Qty	Wt/Fxt	kW	Hours	kWh	Qty	Retrofit Code Description (Sensor in RED)	Wt/Fxt	kW	Hours	kWh	kW Svd	kWh Svd
Building/Area: Main Building														
1st Floor														
Rf#-1 Rm - main entry	2x4x 2L rec trf, F32T8 32w, electronic ballast	2	59	0.118	1,100	130	2	RLT82 - (2) LED 4' T8 lamp 12w, 50,000+ hour rated life at L70, (1) 2L LP electronic ballas/driver	19	0.037	1,100	41	0.0806	89
Rf#-2 Rm - RR hallway	2x4x 2L rec trf, F32T8 32w, electronic ballast	2	59	0.118	2,800	330	2	RLT82 - (2) LED 4' T8 lamp 12w, 50,000+ hour rated life at L70, (1) 2L LP electronic ballas/driver	19	0.037	2,800	105	0.0806	226
Rf#-3 Rm - M RR	1x4x 2L sm wp, F32T8 32w, electronic ballast	2	59	0.118	500	59	2	RLT82 - (2) LED 4' T8 lamp 12w, 50,000+ hour rated life at L70, (1) 2L LP electronic ballas/driver	19	0.037	500	19	0.0806	40
Rf#-4 Rm - W RR	1x4x 2L sm wp, F32T8 32w, electronic ballast	2	59	0.118	500	59	2	RLT82 - (2) LED 4' T8 lamp 12w, 50,000+ hour rated life at L70, (1) 2L LP electronic ballas/driver	19	0.037	500	19	0.0806	40
Rf#-5 Rm - Development Services	2x4x 2L rec trf, F32T8 32w, electronic ballast	13	59	0.767	2,800	2,148	13	RLT82 - (2) LED 4' T8 lamp 12w, 50,000+ hour rated life at L70, (1) 2L LP electronic ballas/driver	19	0.243	2,800	681	0.5236	1,466
Rf#-6 Rm - Office #1	2x4x 2L rec trf, F32T8 32w, electronic ballast	4	59	0.236	2,150	507	4	RLT82 - (2) LED 4' T8 lamp 12w, 50,000+ hour rated life at L70, (1) 2L LP electronic ballas/driver	19	0.075	2,150	161	0.1611	346
Rf#-7 Rm - Office #2	2x4x 2L rec trf, F32T8 32w, electronic ballast	2	59	0.118	2,150	254	2	RLT82 - (2) LED 4' T8 lamp 12w, 50,000+ hour rated life at L70, (1) 2L LP electronic ballas/driver	19	0.037	2,150	80	0.0806	173
Rf#-8 Rm - Office #3	2x4x 2L rec trf, F32T8 32w, electronic ballast	4	59	0.236	2,150	507	4	RLT82 - (2) LED 4' T8 lamp 12w, 50,000+ hour rated life at L70, (1) 2L LP electronic ballas/driver	19	0.075	2,150	161	0.1611	346
Rf#-9 Rm - Office #4	2x4x 2L rec trf, F32T8 32w, electronic ballast	4	59	0.236	2,150	507	4	RLT82 - (2) LED 4' T8 lamp 12w, 50,000+ hour rated life at L70, (1) 2L LP electronic ballas/driver	19	0.075	2,150	161	0.1611	346
Rf#-10 Rm - break room	2x4x 2L rec trf, F32T8 32w, electronic ballast	2	59	0.118	2,800	330	2	RLT82 - (2) LED 4' T8 lamp 12w, 50,000+ hour rated life at L70, (1) 2L LP electronic ballas/driver	19	0.037	2,800	105	0.0806	226
Rf#-11 Rm - back hallway	2x4x 2L rec trf, F32T8 32w, electronic ballast	2	59	0.118	2,800	330	2	RLT82 - (2) LED 4' T8 lamp 12w, 50,000+ hour rated life at L70, (1) 2L LP electronic ballas/driver	19	0.037	2,800	105	0.0806	226
Rf#-12 Rm - furnace room	Inc. 2L vanity, Inc. 60w A19, n/a	1	120	0.12	800	96	1	RL091/s - (1) LED 9w A19 screw in lamp	9	0.009	800	7	0.111	89
Rf#-13 Rm - furnace room	1x4x 2L sm strip, F40T12 34w, magnetic ballast	1	72	0.072	800	58	1	RLT82 - (2) LED 4' T8 lamp 12w, 50,000+ hour rated life at L70, (1) 2L LP electronic ballas/driver	19	0.019	800	15	0.0533	43
Rf#-14 Rm - Office #5	2x4x 2L rec trf, F32T8 32w, electronic ballast	2	59	0.118	2,150	254	2	RLT82 - (2) LED 4' T8 lamp 12w, 50,000+ hour rated life at L70, (1) 2L LP electronic ballas/driver	19	0.037	2,150	80	0.0806	173
Rf#-15 Rm - Office #6	2x4x 2L rec trf, F32T8 32w, electronic ballast	2	59	0.118	2,150	254	2	RLT82 - (2) LED 4' T8 lamp 12w, 50,000+ hour rated life at L70, (1) 2L LP electronic ballas/driver	19	0.037	2,150	80	0.0806	173
Rf#-16 Rm - hallway	2x4x 2L rec trf, F32T8 32w, electronic ballast	1	59	0.059	2,800	165	1	RLT82 - (2) LED 4' T8 lamp 12w, 50,000+ hour rated life at L70, (1) 2L LP electronic ballas/driver	19	0.019	2,800	52	0.0403	113
Rf#-17 Rm - hallway	Inc 2L exit sign, Inc. 25w, n/a	3	50	0.15	2,800	420	3	NLX - New LED exit sign with battery backup	2	0.008	2,800	21	0.1425	399
Rf#-18 Rm - Office #7	2x4x 2L rec trf, F32T8 32w, electronic ballast	2	59	0.118	2,150	254	2	RLT82 - (2) LED 4' T8 lamp 12w, 50,000+ hour rated life at L70, (1) 2L LP electronic ballas/driver	19	0.037	2,150	80	0.0806	173
Rf#-19 Rm - Office #8	2x4x 2L rec trf, F32T8 32w, electronic ballast	2	59	0.118	2,150	254	2	RLT82 - (2) LED 4' T8 lamp 12w, 50,000+ hour rated life at L70, (1) 2L LP electronic ballas/driver	19	0.037	2,150	80	0.0806	173
Rf#-20 Rm - Office #9	2x4x 2L rec trf, F32T8 32w, electronic ballast	2	59	0.118	2,150	254	2	RLT82 - (2) LED 4' T8 lamp 12w, 50,000+ hour rated life at L70, (1) 2L LP electronic ballas/driver	19	0.037	2,150	80	0.0806	173
Rf#-21 Rm - Utility Bill Counter	2x4x 2L rec trf, F32T8 32w, electronic ballast	3	59	0.177	2,800	496	3	RLT82 - (2) LED 4' T8 lamp 12w, 50,000+ hour rated life at L70, (1) 2L LP electronic ballas/driver	19	0.056	2,800	157	0.1208	338

W* = wall switch sensor; C* = ceiling sensor; E* = existing sensor, L* Dimming Control

Town of Chino Valley - Lighting Detail Report

(sorted by building, floor, area)

Public Works - 1982 Voss Dr., Chino Valley, AZ 86323

PRE-RETROFIT							POST RETROFIT								
Location	**Existing Fixture Description**	**Qty**	**Wt/Fxt**	**kW**	**Hours**	**kWh**	**Qty**	**Retrofit Code Description (Sensor in RED)**	**Wt/Fxt**	**kW**	**Hours**	**kWh**	**kW Svd**	**kWh Svd**
Rf#-22 Rm - ext-building mounted	CF 2L wm square low profile, CF 18w, CFL ballast	6	40	0.24	4,380	1,051	6	RL0132/hh - (2) New LED 4 pin 13w lamp, 50,000 hour rated life at L70, (1) new CFL/LED driver	26	0.156	4,380	683	0.084	368
Rf#-23 Rm - ext-building mounted	CF 1L rec can, CF 18w, CFL ballast	2	20	0.04	4,380	175	2	RL091/ckit - (1) recessed can kit, LED 9w, new trim face, 50,000 hour+ rated life at L70	8	0.017	4,380	74	0.023	101
Rf#-24 Rm - ext-building mounted	HPS 1L wm wall pack small, HPS 70w, HID ballast	6	95	0.57	4,380	2,497	6	NL030/wp/fc - New LED wall pack, 50,000 hour L70 rated life, 30w	30	0.18	4,380	788	0.39	1,708
Qty and kW for Public Works :		**72**		**4.3**			**72**			**1.4**			**2.9**	
				kWh for Public Works :		**11,388**						**3,835**		**7,548**

W* = wall switch sensor; C* = ceiling sensor; E* = existing sensor, L* Dimming Control

Town of Chino Valley - Lighting Detail Report

(sorted by building, floor, area)

Roads Dept - 2204 Old Home Manor Dr., Chino Valley, AZ 86323

PRE-RETROFIT							POST RETROFIT							
Location	Existing Fixture Description	Qty	Wt/Fxt	kW	Hours	kWh	Qty	Retrofit Code Description (Sensor in RED)	Wt/Fxt	kW	Hours	kWh	kW Svd	kWh Svd
Building/Area: Main Building														
1st Floor														
Rf#-1 Rm - entry area	1x4x 2L sm wp, F40T12 34w, magnetic ballast	3	72	0.216	900	194	3	RLT82 - (2) LED 4' T8 lamp 12w, 50,000+ hour rated life at L70, (1) 2L LP electronic ballas/driver	19	0.056	900	51	0.1598	144
Rf#-2 Rm - break room	Inc. 1L sm dome, Inc. 60w A19, n/a	2	60	0.12	900	108	2	RL091/s - (1) LED 9w A19 screw in lamp	9	0.018	900	16	0.102	92
Rf#-3 Rm - storage	Inc. 1L ceiling fan light, Inc. 60w A19, n/a	3	60	0.18	900	162	3	RL091/s - (1) LED 9w A19 screw in lamp	9	0.027	900	24	0.153	138
Rf#-4 Rm - room with old ice machine	Inc. 1L sm dome, Inc. 60w A19, n/a	1	60	0.06	900	54	1	RL091/s - (1) LED 9w A19 screw in lamp	9	0.009	900	8	0.051	46
Rf#-5 Rm - Open area	1x4x 2L sm wp, F40T12 34w, magnetic ballast	4	72	0.288	900	259	4	RLT82 - (2) LED 4' T8 lamp 12w, 50,000+ hour rated life at L70, (1) 2L LP electronic ballas/driver	19	0.075	900	67	0.2131	192
Rf#-6 Rm - Restroom	Inc. 1L sm dome, Inc. 60w A19, n/a	1	60	0.06	500	30	1	RL091/s - (1) LED 9w A19 screw in lamp	9	0.009	500	5	0.051	26
Rf#-7 Rm - closet	Inc. 1L sm dome, Inc. 60w A19, n/a	1	60	0.06	900	54	1	RL091/s - (1) LED 9w A19 screw in lamp	9	0.009	900	8	0.051	46
Rf#-8 Rm - Restroom	Inc. 1L sm dome, Inc. 60w A19, n/a	1	60	0.06	500	30	1	RL091/s - (1) LED 9w A19 screw in lamp	9	0.009	500	5	0.051	26
Rf#-9 Rm - ext-pole mounted	HPS 1L flood, yoke mount (wood pole), HPS 400w, HID ballast	2	464	0.928	3,800	3,526	2	NL110/p - New area light pole or bldg mnt 110w, 100,000+ hour rated life at L70, on board occ sensor	110	0.22	3,800	836	0.708	2,690
Rf#-10 Rm - ext building mount	HV 1L wm wall pack small, HPS 70w, HID ballast	2	95	0.19	900	171	2	NL030/wp/fc - New LED wall pack, 50,000 hour L70 rated life, 30w	30	0.06	900	54	0.13	117
	Qty and kW for Roads Dept :	**20**		**2.2**			**20**			**0.5**			**1.7**	
	kWh for Roads Dept :					**4,589**						**1,074**		**3,517**

W* = wall switch sensor; C* = ceiling sensor; E* = existing sensor, L* Dimming Control

Town of Chino Valley - Lighting Detail Report

(sorted by building, floor, area)

Senior Center / Well - 1021 W Butterfield Rd., Chino Valley, AZ 86323

PRE-RETROFIT							POST RETROFIT							
Location	Existing Fixture Description	Qty	Wt/Fxt	kW	Hours	kWh	Qty	Retrofit Code Description (Sensor in RED)	Wt/Fxt	kW	Hours	kWh	kW Svd	kWh Svd
Building/Area: Main Building														
1st Floor														
Rf#-1 Rm - main entry	1x4x 4L sm wp, F40T12 34w, magnetic ballast	1	144	0.144	2,800	403	1	RLT84 - (4) LED 4' T8 lamp 12w, 50,000+ hour rated life at L70, (1) 2L LP electronic ballas/driver	37	0.037	2,800	105	0.1066	298
Rf#-2 Rm - Office #1	2x4x 4L rec trf, F40T12 34w, magnetic ballast	3	144	0.432	2,200	950	3	RLT83/r - (3) LED 4' T8 lamp 12w, 50,000+ hour rated life at L70, (1) 2L LP electronic ballas/driver, (1) 2x4 RFL	28	0.084	2,200	185	0.3478	765
Rf#-3 Rm - large open area	1x4x 4L sm wp, F40T12 34w, magnetic ballast	7	144	1.008	2,800	2,822	7	RLT84 - (4) LED 4' T8 lamp 12w, 50,000+ hour rated life at L70, (1) 2L LP electronic ballas/driver	37	0.262	2,800	734	0.7459	2,089
Rf#-4 Rm - large open area	1x4x 2L wm fxt, F40T12 34w, magnetic ballast	3	72	0.216	2,800	605	3	RLT82 - (2) LED 4' T8 lamp 12w, 50,000+ hour rated life at L70, (1) 2L LP electronic ballas/driver	19	0.056	2,800	157	0.1598	448
Rf#-5 Rm - large open area	1x4x 2L sm wp, F40T12 34w, magnetic ballast	10	72	0.72	2,800	2,016	10	RLT82 - (2) LED 4' T8 lamp 12w, 50,000+ hour rated life at L70, (1) 2L LP electronic ballas/driver	19	0.187	2,800	524	0.5328	1,492
Rf#-6 Rm - M RR	1x4x 2L sm wp, F40T12 34w, magnetic ballast	1	72	0.072	1,500	108	1	RLT82 - (2) LED 4' T8 lamp 12w, 50,000+ hour rated life at L70, (1) 2L LP electronic ballas/driver	19	0.019	1,500	28	0.0533	80
Rf#-7 Rm - W RR	1x4x 2L sm wp, F40T12 34w, magnetic ballast	1	72	0.072	1,500	108	1	RLT82 - (2) LED 4' T8 lamp 12w, 50,000+ hour rated life at L70, (1) 2L LP electronic ballas/driver	19	0.019	1,500	28	0.0533	80
Rf#-8 Rm - kitchen	1x4x 2L sm wp, F40T12 34w, magnetic ballast	10	72	0.72	2,800	2,016	10	RLT82 - (2) LED 4' T8 lamp 12w, 50,000+ hour rated life at L70, (1) 2L LP electronic ballas/driver	19	0.187	2,800	524	0.5328	1,492
Rf#-9 Rm - kitchen food storage	1x4x 2L sm wp, F40T12 34w, magnetic ballast	1	72	0.072	2,800	202	1	RLT82 - (2) LED 4' T8 lamp 12w, 50,000+ hour rated life at L70, (1) 2L LP electronic ballas/driver	19	0.019	2,800	52	0.0533	149
Rf#-10 Rm - kitchen cooler hallway	1x4x 2L sm wp, F40T12 34w, magnetic ballast	1	72	0.072	2,800	202	1	RLT82 - (2) LED 4' T8 lamp 12w, 50,000+ hour rated life at L70, (1) 2L LP electronic ballas/driver	19	0.019	2,800	52	0.0533	149
Rf#-11 Rm - kitchen cooler	Inc. 1L jelly jar, CF 18w, CFL ballast	2	20	0.04	2,800	112	2	RL091/s - (1) LED 9w A19 screw in lamp	9	0.018	2,800	50	0.022	62
Rf#-12 Rm - kitchen freezer	Inc. 1L jelly jar, CF 18w, CFL ballast	2	20	0.04	2,800	112	2	RL091/s - (1) LED 9w A19 screw in lamp	9	0.018	2,800	50	0.022	62
Rf#-13 Rm - Conference room	1x4x 2L sm wp, F40T12 34w, magnetic ballast	2	72	0.144	2,800	403	2	RLT82 - (2) LED 4' T8 lamp 12w, 50,000+ hour rated life at L70, (1) 2L LP electronic ballas/driver	19	0.037	2,800	105	0.1066	298
Rf#-14 Rm - Conference room	Inc. 2L exit sign, Inc. 25w, n/a	1	50	0.05	2,800	140	1	NLX - New LED exit sign with battery backup	2	0.003	2,800	7	0.0475	133
Rf#-15 Rm - Pool table area	1x4x 4L sm wp, F40T12 34w, magnetic ballast	4	144	0.576	2,800	1,613	4	RLT84 - (4) LED 4' T8 lamp 12w, 50,000+ hour rated life at L70, (1) 2L LP electronic ballas/driver	37	0.15	2,800	419	0.4262	1,193
Rf#-16 Rm - M RR entry	Inc. 1L sm dome, Inc. 60w A19, n/a	1	60	0.06	1,500	90	1	RL091/s - (1) LED 9w A19 screw in lamp	9	0.009	1,500	14	0.051	76
Rf#-17 Rm - M RR	Inc. 2L vanity, Inc. 60w A19, n/a	1	60	0.06	1,500	90	1	RL091/s - (1) LED 9w A19 screw in lamp	9	0.009	1,500	14	0.051	76
Rf#-18 Rm - M RR	1x4x 4L sm wp, F40T12 34w, magnetic ballast	1	144	0.144	1,500	216	1	RLT84 - (4) LED 4' T8 lamp 12w, 50,000+ hour rated life at L70, (1) 2L LP electronic ballas/driver	37	0.037	1,500	56	0.1066	160
Rf#-19 Rm - W RR entry	Inc. 1L sm dome, Inc. 60w A19, n/a	1	60	0.06	1,500	90	1	RL091/s - (1) LED 9w A19 screw in lamp	9	0.009	1,500	14	0.051	76
Rf#-20 Rm - W RR	Inc. 2L vanity, Inc. 60w A19, n/a	1	120	0.12	1,500	180	1	RL091/s - (1) LED 9w A19 screw in lamp	9	0.009	1,500	14	0.111	166
Rf#-21 Rm - W RR	1x4x 4L sm wp, F40T12 34w, magnetic ballast	1	144	0.144	1,500	216	1	RLT84 - (4) LED 4' T8 lamp 12w, 50,000+ hour rated life at L70, (1) 2L LP electronic ballas/driver	37	0.037	1,500	56	0.1066	160

W* = wall switch sensor; C* = ceiling sensor; E* = existing sensor, L* Dimming Control

Senior Center / Well - 1021 W Butterfield Rd., Chino Valley, AZ 86323

PRE-RETROFIT							POST RETROFIT								
Location	Existing Fixture Description	Qty	Wt/Fxt	kW	Hours	kWh	Qty	Retrofit Code Description (Sensor in RED)	Wt/Fxt	kW	Hours	kWh	kW Svd	kWh Svd
Rf#-22 Rm - custodial	Inc. 1L bare bulb, Inc. 60w A19, n/a	1	60	0.06	800	48	1	RL091/s - (1) LED 9w A19 screw in lamp	9	0.009	800	7	0.051	41
Rf#-23 Rm - ext-building mounted (flag)	Inc. 2L par flood, Inc. 65w P38, n/a	1	120	0.12	4,380	526	1	NL019/fld - New LED flood mounted, 50,000 hour L70 rated life, 19w	19	0.019	4,380	83	0.101	442
Rf#-24 Rm - ext-building mounted (front)	Inc. 1L wm can, Inc. 60w A19, n/a	2	60	0.12	4,380	526	2	NL012/wp - New LED wall pack, 50,000 hour L70 rated life, 12w	12	0.024	4,380	105	0.096	420
Rf#-25 Rm - ext-building mounted	HPS 1L wm wall pack small, HPS 70w, HID ballast	6	95	0.57	4,380	2,497	6	NL030/wp/fc - New LED wall pack, 50,000 hour L70 rated life, 30w	30	0.18	4,380	788	0.39	1,708
Rf#-26 Rm - ext-building mounted	Inc. 1L wm jelly jar, Inc. 60w A19, n/a	6	60	0.36	4,380	1,577	6	NL012/wp - New LED wall pack, 50,000 hour L70 rated life, 12w	12	0.072	4,380	315	0.288	1,261
Qty and kW for Senior Center / Well :		**71**		**6.2**			**71**			**1.5**			**4.7**	
kWh for Senior Center / Well :						**17,867**						**4,486**		**13,376**

W* = wall switch sensor; C* = ceiling sensor; E* = existing sensor, L* Dimming Control

Shop / Police Dept Mobile - 1910 Voss Dr., Chino Valley, AZ 86323

PRE-RETROFIT							POST RETROFIT								
Location	Existing Fixture Description	Qty	Wt/Fxt	kW	Hours	kWh	Qty	Retrofit Code Description (Sensor in RED)	Wt/Fxt	kW	Hours	kWh	kW Svd	kWh Svd
Building/Area: Facility Shop														
1st Floor														
Rf#-14 Rm - all rooms	1x4x 4L sm wp, F40T12 34w, magnetic ballast	8	144	1.152	1,500	1,728	8	RLT84 - (4) LED 4' T8 lamp 12w, 50,000+ hour rated life at L70, (1) 2L LP electronic ballas/driver	37	0.3	1,500	449	0.8525	1,279
Rf#-15 Rm - ext-building mounted	Inc. 1L wm vandal, Inc. 60w A19, n/a	2	60	0.12	4,380	526	2	NL012/wp - New LED wall pack, 50,000 hour L70 rated life, 12w	12	0.024	4,380	105	0.096	420
Building/Area: Main Building														
1st Floor														
Rf#-1 Rm - Garage bays	1x8x 2L sm strip, F96T12 60w, magnetic ballast	8	128	1.024	2,500	2,560	8	RL040/skit - (2) LED 20w strips, 50,000+ hour rated life at L70	40	0.32	2,500	800	0.704	1,760
Rf#-2 Rm - break room	Inc. 1L ceiling fan lamps, Inc. 60w A19, n/a	8	60	0.48	800	384	8	RL091/s - (1) LED 9w A19 screw in lamp	9	0.072	800	58	0.408	326
Rf#-3 Rm - RR lobby	1x4x 4L sm wp, F40T12 34w, magnetic ballast	1	144	0.144	800	115	1	RLT84 - (4) LED 4' T8 lamp 12w, 50,000+ hour rated life at L70, (1) 2L LP electronic ballas/driver	37	0.037	800	30	0.1066	85
Rf#-4 Rm - M RR	Inc. 1L bare bulb, Inc. 60w A19, n/a	1	60	0.06	800	48	1	RL091/s - (1) LED 9w A19 screw in lamp	9	0.009	800	7	0.051	41
Rf#-5 Rm - M RR	Inc. 1L jelly jar, Inc. 60w A19, n/a	1	60	0.06	800	48	1	RL091/s - (1) LED 9w A19 screw in lamp	9	0.009	800	7	0.051	41
Rf#-6 Rm - W RR	Inc. 1L bare bulb, Inc. 60w A19, n/a	1	60	0.06	800	48	1	RL091/s - (1) LED 9w A19 screw in lamp	9	0.009	800	7	0.051	41
Rf#-7 Rm - W RR	Inc. 1L jelly jar, Inc. 60w A19, n/a	1	60	0.06	800	48	1	RL091/s - (1) LED 9w A19 screw in lamp	9	0.009	800	7	0.051	41
Rf#-8 Rm - office	1x4x 2L sm wp, F40T12 34w, magnetic ballast	2	72	0.144	1,500	216	2	RLT82 - (2) LED 4' T8 lamp 12w, 50,000+ hour rated life at L70, (1) 2L LP electronic ballas/driver	19	0.037	1,500	56	0.1066	160
Rf#-9 Rm - mezzanine offices #1	Inc. 1L rec can, Inc. 60w A19, n/a	4	60	0.24	1,800	432	4	RL091/ckit - (1) recessed can kit, LED 9w, new trim face, 50,000 hour+ rated life at L70	8	0.034	1,800	61	0.206	371
Rf#-10 Rm - mezzanine offices #2	Inc. 1L rec can, Inc. 60w A19, n/a	4	60	0.24	1,800	432	4	RL091/ckit - (1) recessed can kit, LED 9w, new trim face, 50,000 hour+ rated life at L70	8	0.034	1,800	61	0.206	371
Rf#-11 Rm - mezzanine offices #3	Inc. 1L rec can, Inc. 60w A19, n/a	4	60	0.24	1,800	432	4	RL091/ckit - (1) recessed can kit, LED 9w, new trim face, 50,000 hour+ rated life at L70	8	0.034	1,800	61	0.206	371
Rf#-12 Rm - ext-building mounted	HPS 1L wm wall pack FCO, HPS 150w, HID ballast	2	195	0.39	4,380	1,708	2	NL030/wp/fc - New LED wall pack, 50,000 hour L70 rated life, 30w	30	0.06	4,380	263	0.33	1,445
Rf#-13 Rm - ext-building mounted	HPS 1L wm barn light, MV 250w, HID ballast	1	295	0.295	4,380	1,292	1	NL040/brn - New LED area "barn light", 50,000+ hour L70 rated life, 40w	30	0.03	4,380	131	0.265	1,161
Building/Area: PD Mobile														
1st Floor														
Rf#-16 Rm - all rooms	1x4x 2L sm wp, F40T12 34w, magnetic ballast	17	72	1.224	1,500	1,836	17	RLT82 - (2) LED 4' T8 lamp 12w, 50,000+ hour rated life at L70, (1) 2L LP electronic ballas/driver	19	0.318	1,500	477	0.9058	1,359
Rf#-17 Rm - all rooms	Inc. 1L sm dome, Inc. 60w A19, n/a	1	60	0.06	1,500	90	1	RL091/s - (1) LED 9w A19 screw in lamp	9	0.009	1,500	14	0.051	76
Rf#-18 Rm - ext-building mounted	Inc. 1L jelly jar, Inc. 60w A19, n/a	1	60	0.06	4,380	263	1	NL012/wp - New LED wall pack, 50,000 hour L70 rated life, 12w	12	0.012	4,380	53	0.048	210

W* = wall switch sensor; C* = ceiling sensor; E* = existing sensor, L* Dimming Control

Town of Chino Valley - Lighting Detail Report

(sorted by building, floor, area)

Shop / Police Dept Mobile - 1910 Voss Dr., Chino Valley, AZ 86323

PRE-RETROFIT							POST RETROFIT								
Location	Existing Fixture Description	Qty	Wt/Fxt	kW	Hours	kWh	Qty	Retrofit Code Description (Sensor in RED)	Wt/Fxt	kW	Hours	kWh	kW Svd	kWh Svd
Rf#-19 Rm - ext-building mounted	Inc. 1L wm wall pack, HPS 70w, HID ballast	1	95	0.095	4,380	416	1	NL012/wp - New LED wall pack, 50,000 hour L70 rated life, 12w	12	0.012	4,380	53	0.083	364
Qty and kW for Shop / Police Dept Mobile :		**68**		**6.1**			**68**			**1.4**			**4.8**	
kWh for Shop / Police Dept Mobile :						**12,622**						**2,700**		**9,922**

W* = wall switch sensor; C* = ceiling sensor; E* = existing sensor, L* Dimming Control

Street Lights / Traffic Signals -

PRE-RETROFIT							POST RETROFIT							
Location	Existing Fixture Description	Qty	Wt/Fxt	kW	Hours	kWh	Qty	Retrofit Code Description (Sensor in RED)	Wt/Fxt	kW	Hours	kWh	kW Svd	kWh Svd
Building/Area: Main Building														
1st Floor														
Rf#-1 Rm - Road 3 N/89A - security light on	HPS 1L cobra head PC, HPS 250w, HID ballast	2	295	0.59	4,380	2,584	2	NL081/p - New area light pole mnt 81w, 100,000+ hour rated life at L70	81	0.162	4,380	710	0.428	1,875
Rf#-2 Rm - Road 2 N/89A - security light on	HPS 1L cobra head PC, HPS 250w, HID ballast	4	295	1.18	4,380	5,168	4	NL081/p - New area light pole mnt 81w, 100,000+ hour rated life at L70	81	0.324	4,380	1,419	0.856	3,749
Rf#-3 Rm - Center/89A - security light on traffic	HPS 1L cobra head PC, HPS 250w, HID ballast	2	295	0.59	4,380	2,584	2	NL081/p - New area light pole mnt 81w, 100,000+ hour rated life at L70	81	0.162	4,380	710	0.428	1,875
Rf#-4 Rm - Road 1 S/89A - security light on	HPS 1L cobra head PC, HPS 250w, HID ballast	3	295	0.885	4,380	3,876	3	NL081/p - New area light pole mnt 81w, 100,000+ hour rated life at L70	81	0.243	4,380	1,064	0.642	2,812
Rf#-5 Rm - Road 2 S/89A - security light on	HPS 1L cobra head PC, HPS 250w, HID ballast	2	295	0.59	4,380	2,584	2	NL081/p - New area light pole mnt 81w, 100,000+ hour rated life at L70	81	0.162	4,380	710	0.428	1,875
Rf#-6 Rm - Road 4 S/89A - roadway light on	HPS 1L cobra head PC, HPS 250w, HID ballast	8	295	2.36	4,380	10,337	8	NL081/p - New area light pole mnt 81w, 100,000+ hour rated life at L70	81	0.648	4,380	2,838	1.712	7,499
Qty and kW for Street Lights / Traffic Signals :		**21**		**6.2**			**21**			**1.7**			**4.5**	
kWh for Street Lights / Traffic Signals :						**27,134**						**7,451**		**19,685**

W* = wall switch sensor; C* = ceiling sensor; E* = existing sensor, L* Dimming Control

CLIMATEC BUILDING TECHNOLOGIES GROUP

Town Hall - 202 N Highway 89, Chino Valley, AZ 86323

PRE-RETROFIT							POST RETROFIT							
Location	Existing Fixture Description	Qty	Wt/Fxt	kW	Hours	kWh	Qty	Retrofit Code Description (Sensor in RED)	Wt/Fxt	kW	Hours	kWh	kW Svd	kWh Svd
Building/Area: Main Building														
1st Floor														
Rf#-1 Rm - entry lobby	CF 2L rec can, CF 18w, CFL ballast	2	40	0.08	2,500	200	2	RL091/ckit - (1) recessed can kit, LED 9w, new trim face, 50,000 hour+ rated life at L70	8	0.017	2,500	42	0.063	158
Rf#-2 Rm - main hallway	2x4x 3L rec trf, F32T8 32w, electronic ballast	6	90	0.54	2,500	1,350	6	RL036/tkit - (1) LED 36w linear recessed troffer w/volumetric lens, 100,000+ hour life at L70 L-DS	36	0.216	2,125	459	0.324	891
Rf#-3 Rm - M RR	1x4x 2L sm strip (cove), F32T8 32w, electronic ballast	3	59	0.177	1,500	266	3	RLT82 - (2) LED 4' T8 lamp 12w, 50,000+ hour rated life at L70, (1) 2L LP electronic ballas/driver	19	0.056	1,500	84	0.1208	181
Rf#-4 Rm - W RR	1x4x 2L sm strip (cove), F32T8 32w, electronic ballast	3	59	0.177	1,500	266	3	RLT82 - (2) LED 4' T8 lamp 12w, 50,000+ hour rated life at L70, (1) 2L LP electronic ballas/driver	19	0.056	1,500	84	0.1208	181
Rf#-5 Rm - reception desk	2x4x 3L rec trf, F32T8 32w, electronic ballast	2	90	0.18	2,500	450	2	RL036/tkit - (1) LED 36w linear recessed troffer w/volumetric lens, 100,000+ hour life at L70 L-DS	36	0.072	2,125	153	0.108	297
Rf#-6 Rm - office behind desk	2x4x 3L rec trf, F32T8 32w, electronic ballast	2	90	0.18	2,500	450	2	RL036/tkit - (1) LED 36w linear recessed troffer w/volumetric lens, 100,000+ hour life at L70 L-DS	36	0.072	2,125	153	0.108	297
Rf#-7 Rm - main hallway	2x4x 3L rec trf, F32T8 32w, electronic ballast	4	90	0.36	2,500	900	4	RL036/tkit - (1) LED 36w linear recessed troffer w/volumetric lens, 100,000+ hour life at L70 L-DS	36	0.144	2,125	306	0.216	594
Rf#-8 Rm - Office #1	2x4x 3L rec trf, F32T8 32w, electronic ballast	2	90	0.18	1,800	324	2	RL036/tkit - (1) LED 36w linear recessed troffer w/volumetric lens, 100,000+ hour life at L70 L-DS	36	0.072	1,530	110	0.108	214
Rf#-9 Rm - copy room	2x4x 3L rec trf, F32T8 32w, electronic ballast	1	90	0.09	1,800	162	1	RL036/tkit - (1) LED 36w linear recessed troffer w/volumetric lens, 100,000+ hour life at L70 L-DS	36	0.036	1,530	55	0.054	107
Rf#-10 Rm - back hallway	2x4x 3L rec trf, F32T8 32w, electronic ballast	2	90	0.18	2,500	450	2	RL036/tkit - (1) LED 36w linear recessed troffer w/volumetric lens, 100,000+ hour life at L70 L-DS	36	0.072	2,125	153	0.108	297
Rf#-11 Rm - Office #2	2x4x 3L rec trf, F32T8 32w, electronic ballast	3	90	0.27	1,800	486	3	RL036/tkit - (1) LED 36w linear recessed troffer w/volumetric lens, 100,000+ hour life at L70 L-DS	36	0.108	1,530	165	0.162	321
Rf#-12 Rm - server room	2x4x 3L rec trf, F32T8 32w, electronic ballast	1	90	0.09	500	45	1	RL036/tkit - (1) LED 36w linear recessed troffer w/volumetric lens, 100,000+ hour life at L70 L-DS	36	0.036	425	15	0.054	30
Rf#-13 Rm - Office hallway	2x4x 3L rec trf, F32T8 32w, electronic ballast	3	90	0.27	2,500	675	3	RL036/tkit - (1) LED 36w linear recessed troffer w/volumetric lens, 100,000+ hour life at L70 L-DS	36	0.108	2,125	230	0.162	446
Rf#-14 Rm - Office #3	2x4x 3L rec trf, F32T8 32w, electronic ballast	2	90	0.18	1,800	324	2	RL036/tkit - (1) LED 36w linear recessed troffer w/volumetric lens, 100,000+ hour life at L70 L-DS	36	0.072	1,530	110	0.108	214
Rf#-15 Rm - Office #4	2x4x 3L rec trf, F32T8 32w, electronic ballast	2	90	0.18	1,800	324	2	RL036/tkit - (1) LED 36w linear recessed troffer w/volumetric lens, 100,000+ hour life at L70 L-DS	36	0.072	1,530	110	0.108	214
Rf#-16 Rm - Office #5	2x4x 3L rec trf, F32T8 32w, electronic ballast	2	90	0.18	1,800	324	2	RL036/tkit - (1) LED 36w linear recessed troffer w/volumetric lens, 100,000+ hour life at L70 L-DS	36	0.072	1,530	110	0.108	214
Rf#-17 Rm - Office #6	2x4x 3L rec trf, F32T8 32w, electronic ballast	2	90	0.18	1,800	324	2	RL036/tkit - (1) LED 36w linear recessed troffer w/volumetric lens, 100,000+ hour life at L70 L-DS	36	0.072	1,530	110	0.108	214
Rf#-18 Rm - Office #7	2x4x 3L rec trf, F32T8 32w, electronic ballast	4	90	0.36	1,800	648	4	RL036/tkit - (1) LED 36w linear recessed troffer w/volumetric lens, 100,000+ hour life at L70 L-DS	36	0.144	1,530	220	0.216	428
Rf#-19 Rm - board room	2x4x 3L rec trf, F32T8 32w, electronic ballast	18	90	1.62	1,000	1,620	18	RL036/tkit - (1) LED 36w linear recessed troffer w/volumetric lens, 100,000+ hour life at L70 L-DS	36	0.648	850	551	0.972	1,069
Rf#-20 Rm - conference room	1x4x 4L sm wp, F32T8 32w, electronic ballast	2	112	0.224	1,000	224	2	RLT84 - (4) LED 4' T8 lamp 12w, 50,000+ hour rated life at L70, (1) 2L LP electronic ballas/driver	37	0.075	1,000	75	0.1491	149
Rf#-21 Rm - ext-ground mounted	MH 1L flood, slip, MH 175w, HID ballast	2	215	0.43	2,000	860	2	NL019/fld - New LED flood mounted, 50,000 hour L70 rated life, 19w	19	0.038	2,000	76	0.392	784

W* = wall switch sensor; C* = ceiling sensor; E* = existing sensor, L* Dimming Control

Town of Chino Valley - Lighting Detail Report

(sorted by building, floor, area)

Town Hall - 202 N Highway 89, Chino Valley, AZ 86323

PRE-RETROFIT							POST RETROFIT								
Location	Existing Fixture Description	Qty	Wt/Fxt	kW	Hours	kWh	Qty	Retrofit Code Description (Sensor in RED)	Wt/Fxt	kW	Hours	kWh	kW Svd	kWh Svd
Rf#-22 Rm - ext-ground mounted	MH 1L bollard (perciline), MH 175w, HID ballast	4	215	0.86	2,000	1,720	4	RL018/s/gc - (1) LED 18w A19 screw in lamp 120/277v	18	0.072	2,000	144	0.788	1,576
Rf#-23 Rm - ext-pole mounted	HPS 1L shoe box, SqP, DB, 5SH, HPS 250w, HID ballast	5	295	1.475	4,380	6,461	5	NL072/p/s - New area light pole or bldg mnt 72w, 100,000+ hour rated life at L70, on board occ sensor	72	0.36	4,380	1,577	1.115	4,884
Rf#-24 Rm - ext-building mounted	MH 1L wm wall pack FT, MH 175w, HID ballast	7	215	1.505	2,000	3,010	7	NL030/wp/ft - New LED wall pack, 50,000 hour L70 rated life, 30w	30	0.21	2,000	420	1.295	2,590
	Qty and kW for Town Hall :	**84**		**10.0**			**84**			**2.9**			**7.1**	
			kWh for Town Hall :			**21,862**						**5,512**		**16,350**

W* = wall switch sensor; C* = ceiling sensor; E* = existing sensor, L* Dimming Control

Town of Chino Valley - Lighting Detail Report

(sorted by building, floor, area)

Waste Water Treatment Plant - 2190 Rodeo Dr., Chino Valley, AZ 86323

PRE-RETROFIT							POST RETROFIT							
Location	Existing Fixture Description	Qty	Wt/Fxt	kW	Hours	kWh	Qty	Retrofit Code Description (Sensor in RED)	Wt/Fxt	kW	Hours	kWh	kW Svd	kWh Svd
Building/Area: Effluent Bldg														
1st Floor														
Rf#-7 Rm - ext-building mounted	1x8x 2L sm vapor tight, F96T12 60w, magnetic ballast	2	128	0.256	4,380	1,121	2	RL040/skit - (2) LED 20w strips, 50,000+ hour rated life at L70	40	0.08	4,380	350	0.176	771
Rf#-8 Rm - UV room	1x4x 2L sm vapor tight, F40T12 34w, magnetic ballast	3	72	0.216	800	173	3	RLT82 - (2) LED 4' T8 lamp 12w, 50,000+ hour rated life at L70, (1) 2L LP electronic ballas/driver	19	0.056	800	45	0.1598	128
Building/Area: Filter/Press														
1st Floor														
Rf#-3 Rm - filter press room	1x8x 2L sm vapor tight, F96T12 60w, magnetic ballast	7	128	0.896	2,300	2,061	7	RL040/skit - (2) LED 20w strips, 50,000+ hour rated life at L70	40	0.28	2,300	644	0.616	1,417
Rf#-4 Rm - MCC	1x8x 2L sm ind hood, F96T12 60w, magnetic ballast	2	128	0.256	1,200	307	2	RL040/skit - (2) LED 20w strips, 50,000+ hour rated life at L70	40	0.08	1,200	96	0.176	211
Rf#-5 Rm - pump room	1x8x 2L sm ind hood, F96T12 60w, magnetic ballast	6	128	0.768	2,300	1,766	6	RL040/skit - (2) LED 20w strips, 50,000+ hour rated life at L70	40	0.24	2,300	552	0.528	1,214
Rf#-6 Rm - ext-building mounted	HPS 1L wm wall pack large, HPS 150w, HID ballast	2	195	0.39	4,380	1,708	2	RL050/kit - (1) LED retrofit module, 50w, 50,000+ hour rated life at L70	50	0.1	4,380	438	0.29	1,270
Building/Area: Headwork's														
1st Floor														
Rf#-1 Rm - main room	1x8x 2L sm vapor tight, F96T12 60w, magnetic ballast	10	128	1.28	2,300	2,944	10	RL040/skit - (2) LED 20w strips, 50,000+ hour rated life at L70	40	0.4	2,300	920	0.88	2,024
Rf#-2 Rm - ext-building mounted	HPS 1L wm wall pack large, HPS 150w, HID ballast	4	195	0.78	4,380	3,416	4	RL050/kit - (1) LED retrofit module, 50w, 50,000+ hour rated life at L70	50	0.2	4,380	876	0.58	2,540
Building/Area: Office Trailer														
1st Floor														
Rf#-10 Rm - all rooms	1x4x 4L sm wrap, F40T12 34w, magnetic ballast	7	144	1.008	1,200	1,210	7	RLT84 - (4) LED 4' T8 lamp 12w, 50,000+ hour rated life at L70, (1) 2L LP electronic ballas/driver	37	0.262	1,200	314	0.7459	895
Rf#-11 Rm - all rooms	Inc. 1L sm dome, Inc. 60w A19, n/a	3	60	0.18	1,200	216	3	RL091/s - (1) LED 9w A19 screw in lamp	9	0.027	1,200	32	0.153	184
Rf#-12 Rm - ext-building mounted	Inc. 1L jelly jar, Inc. 60w A19, n/a	2	60	0.12	4,380	526	2	NL012/wp - New LED wall pack, 50,000 hour L70 rated life, 12w	12	0.024	4,380	105	0.096	420
Building/Area: Treatment Track														
1st Floor														
Rf#-9 Rm - ext-pole mounted	HPS 1L post top explosion proof, HPS 100w, HID ballast	4	130	0.52	4,380	2,278	4	RL027/s/tg - (1) LED 27w screw in lamp 120/277v, 50,000 hour rated life at L70	27	0.108	4,380	473	0.412	1,805
Qty and kW for Waste Water Treatment Plant :		**52**		**6.7**			**52**			**1.9**			**4.8**	
kWh for Waste Water Treatment Plant :						**17,726**						**4,845**		**12,879**

W* = wall switch sensor; C* = ceiling sensor; E* = existing sensor, L* Dimming Control

Attachment "C"

Mechanical Equipment Schedule

Library - HVAC Inventory

Location Served	Equipment	QTY	Existing					Proposed		
			Manuf.	Model No.	Ton	Year	Elec	Manuf.	Model No.	Elec
North (New Addition)	Packaged HP	1	Carrier	50JS-060---311	5	2003	208-230/1ph	Carrier	50HCQA06	208-230/1ph
North Wing	Gas Pack	2	Ruud	URGG-10E61JKR	5	1992	208-230/1ph	Carrier	48HCLA06	208-230/1ph
South Wing	Gas Pack	2	Heil	PGAA47F1K3	4	1996	208-230/1ph	Carrier	48HCLA05	208-230/1ph
South Wing	Split Condenser	1	Ruud	UAKA-042JAZ	3.5	2000	208-230/1ph	Carrier	24AAA542A	208-230/1ph
South Wing	Split Furnace	1	Amana	GHE120DN-4	N/A	2000	115/60/1ph	Carrier	59SP5A120E	115/60/1ph

Police Department - HVAC Inventory

Location Served	Equipment	QTY	Existing					Proposed		
			Manuf.	Model No.	Ton	Year	Elec	Manuf.	Model No.	Elec
Police Dept.	Gas Pack	1	Heil	50JS-060---311	5	1996	208-230/1ph	Carrier	48HCLA06	208-230/1ph
Police Dept.	Split Condenser	1	Heil	~	3	1996	208-230/1ph	Carrier	24AAA536A	208-230/1ph
Police Dept.	Split Furnace	1	~	~	~	~	115/60/1ph	Carrier	59SP5A100E	115/60/1ph

Attachment "D"

Technical Appendix

Due to the size of Attachment "D," it is not included in this packet, but it will be included with the online version as a separate document. See http://www.chinoaz.net/AgendaCenter.

***

A printed copy is available for viewing in the Town Clerk's/Town Council Office.

Attachment "E"
Form of Change Order

"ATTACHMENT E"

FORM OF CHANGE ORDER

CHANGE ORDER NO. _____

Distribution:	TOWN	[ ]
	CLIMATEC	[ ]
	OTHER	[ ]

PROJECT: _____ DATE:
OWNER: Town of Chino Valley
CONSULTANT:
AGREEMENT DATED:

CHANGES: The Agreement is changed as follows:

Not valid until signed by both Town and Climatec.
Signature of Climatec indicates acceptance.

The original compensation was _____

Net change by previously authorized Change Orders_____

The compensation prior to this Change Order was _____

The compensation will be increased by this Change Order in the amount of
_____

The new compensation under the Agreement including this Change Order will be
_____

The Contract Time will increase by _____

ACCEPTANCE STATUS:

_____	_____
Climatec, LLC	Town of Chino Valley
By _____	By _____
Date _____	Date _____

CLIMATEC MEASUREMENT AND VERIFICATION AGREEMENT FOR Town of Chino Valley

SCOPE OF SERVICES

TERMS AND CONDITIONS

ATTACHMENTS

Attachment "A" – Guaranteed Savings Measurement & Verification

I. Savings Guarantee
II. Measurement And Verification Methods
III. Selected Measurement And Verification Options
IV. Specific M&V Plan For Each ECM:
    a. Lighting System Upgrades
    b. HVAC System Installation
    c. HVAC Controls Upgrades

Attachment "B" – Utility Baseline Summary

Attachment "C" – Standards of Operation (Lighting & HVAC)

I. Standards of Operation for HVAC
II. Standards of Operation for Lighting

CLIMATEC M&V AGREEMENT

This Measurement and Verification ("M&V") Agreement ("Agreement") dated July 27, 2016 ("Effective Date") is made by and between:

Town of Chino Valley, AZ ("Purchaser")
with its principal place of business at
202 N. State Route 89, Chino Valley, AZ 86323
and

Climatec, LLC
With its principal place of business at
2851 W. Kathleen Rd, Phoenix, AZ 85053

Purchaser and Climatec LLC agree as follows:

This Agreement shall include the Attachment(s) listed below:

Attachment "A" - Guaranteed Savings Measurement & Verification

Attachment "B" – Utility Baseline Summary

Attachment "C" – Standards of Operation (Lighting & HVAC)

SCOPE OF SERVICES

Energy Savings Measurement & Verification (M&V) Service:

Climatec LLC will provide measurement and verification services of the energy savings associated with Purchaser's Energy Retrofit Installation, as described in Attachment A - Scope of Work, located in the associated Installation Agreement. Energy Savings M&V reports will be provided to the Purchaser on an annual basis.

Term:

This Agreement shall commence upon the completion and acceptance of the Purchaser's Energy Retrofit Installation Project as described in the "Installation Agreement for Town of Chino Valley" dated July 12, 2016 and receipt of final payment for that contract and shall continue for a term of 15 years. The Purchaser may terminate this Agreement at any time with a 60 day written notice. However, termination of this Agreement will void any savings guarantee associated with the Installation project.

Charges:

This Agreement shall be billed once per year and is due and payable upon the Purchaser's receipt of invoice. The annual Service Agreement charge is $4,500 for the first three years and escalated at 4% annually for every subsequent year thereafter. This rate does not include taxes.

TERMS AND CONDITIONS

1.0 General Provisions:

1.1 Unless stated otherwise, the services provided under this Agreement shall be provided during Climatec LLC's normal business hours. Normal business hours are Monday through Friday, 8:00 A.M. to 5:00 P.M. inclusive, excluding holidays.

1.2 The Purchaser shall provide reasonable means of access to the equipment being measured or verified. Climatec LLC shall not be responsible for any removal, replacement, or refinishing of the building structure, if required to gain access to the equipment. Climatec LLC shall be permitted to start and stop all equipment necessary to perform the services herein described as arranged with the Purchaser's representative.

1.3 This Agreement, when accepted in writing by the Purchaser and approved by an authorized Climatec LLC representative, shall constitute the entire Agreement between the two (2) parties.

2.0 Charges:

2.1 For services not covered by this Agreement, but performed by Climatec LLC upon the Purchaser's authorization, the Purchaser agrees to pay Climatec LLC upon presentation of itemized invoice(s) at Climatec LLC's current rates.

2.2 If emergency service is requested by the Purchaser and inspection does not reveal any defect for which Climatec LLC is liable under this Agreement, the Purchaser will be charged at Climatec LLC's current emergency charge rates.

3.0 Limitations of Liability:

3.1 Climatec LLC shall not be liable for any loss, delay, injury, or damage that may be caused by circumstances beyond its control including, but not restricted to; acts of God, war, civil commotion, acts of government, fire, theft, corrosion, floods, lightning strikes, freezes, strikes, lockouts, differences with workmen, riots, explosions, quarantine restrictions, delays in transportation, shortage of vehicles, fuel, labor or materials, or malicious mischief. IN NO EVENT SHALL CLIMATEC LLC BE LIABLE FOR BUSINESS INTERRUPTION, LOSSES, OR CONSEQUENTIAL, INDIRECT, SPECIAL OR SPECULATIVE DAMAGES.

3.2 Climatec LLC shall not be required to make safety tests, install new devices, or make modifications to any equipment to comply with recommendations or directives of insurance companies, governmental bodies, or for other reasons.

3.3 Climatec LLC shall not be required to make replacements or repairs necessitated by reason of negligence, abuse, misuse, or by reason of any other cause.

3.5 This agreement pre-supposes that all equipment is in satisfactory working order. Climatec LLC will inspect the equipment within sixty (60) days after the agreement takes effect and will advise the Purchaser of any equipment found to be in need of repair. If the Purchaser does not authorize Climatec LLC to make the repairs or if the Purchaser does not have the work performed, the equipment will be eliminated from coverage and the Agreement savings will be adjusted. Maintenance of existing equipment and systems is the responsibility of the Purchaser. Failure to properly maintain equipment and systems can result in reduced energy efficiency and may necessitate a baseline energy adjustment. There may be some equipment which, for reasons beyond Climatec LLC's control, cannot be inspected before this Agreement takes effect. Climatec LLC will inspect such equipment on the first visit where the equipment is available.

3.6 The amount of any present or future sales, use, occupancy excise, or other tax (federal, state, or local) which Climatec LLC hereafter shall be obligated to pay, either on its own behalf or on the behalf of the Purchaser or otherwise, with respect to the services covered by this Agreement, shall be paid by the Purchaser.

3.7 If the equipment or software included under this Agreement is altered, modified, or changed by a party other than Climatec LLC, this Agreement shall be modified to incorporate such changes and the Agreement price and/or Savings shall be adjusted accordingly.

3.8 Following twelve (12) months of service or any time thereafter, if individual item(s) cannot, in Climatec LLC's opinion, be properly repaired on-site because of excessive wear or deterioration, Climatec LLC may withdraw the item(s) from coverage upon ninety (90) days prior written notice. Energy savings may be adjusted accordingly.

3.9 This Agreement shall be governed by, construed, and enforced in accordance with the laws of the State of Arizona.

4.0 Miscellaneous Provisions:

4.1 The services provided hereunder may occur on active Purchaser sites. As such, Climatec LLC shall ensure that its services on and around the Purchaser site comply with all applicable laws, regulations and standards including but not limited to, the fingerprinting requirements of the Education Code and any other legal requirements which may be applicable to Climatec LLC's activities on or about the Purchaser sites. While the Purchaser shall reasonably assist Climatec LLC in determining the applicable requirements, it shall be Climatec LLC's sole responsibility for determining and complying with all applicable laws, regulations, and standards.

4.2 Dispute Resolution:

4.2.1 Disputes: This Section shall apply to any dispute arising under or related to this Agreement (whether arising in contract, tort or otherwise, and whether arising at law or in equity), including (a) any dispute regarding the performance, validity or enforceability of any provision of this Agreement or whether any Party is in compliance with, or breach of, any provisions of this Agreement and (b) the applicability of this Section to a particular dispute. Any dispute to which this Section applies is referred to herein as a "Dispute."

4.2.2 Negotiation to Resolve Disputes: If a Dispute arises, the Parties shall attempt to resolve such dispute through the following procedure:

4.2.2.1 First, the representatives of each of the Parties shall promptly meet (whether by phone or in person) in a good faith attempt to resolve the Dispute;

4.2.2.2 Second, if the Dispute is still unresolved after 20 days following the commencement of the negotiations described in Section 4.2.2.1 then the designated executive officer of each Party shall meet (whether by phone or in person) in a good faith attempt to resolve the Dispute;

4.2.2.3 Third, if the Dispute is still unresolved after 10 days following the commencement of the negotiations described in Section 4.2.2.2, then either Party may submit such Dispute to arbitration pursuant to Section 4.2.2.4;

4.2.2.4 Any Dispute arising from or relating to this Agreement that is adjudicated pursuant to this Section 4.2.2.4 shall be arbitrated in Chino Valley, Arizona. The arbitration shall be in accordance with its Comprehensive Arbitration Rules and Procedures with an arbitrator mutually agreed upon by the parties, and judgment on any award may be entered in any court of competent jurisdiction. If the Parties agree, a mediator may be consulted prior to arbitration. The prevailing party in any dispute arising out of this Agreement shall be entitled to reasonable attorneys' fees and costs; and

4.2.2.5 Pending a final resolution of a Dispute, the Parties shall each proceed diligently and faithfully with performance of their respective obligations under this Agreement.

4.3 Indemnification:

To the fullest extent permitted by law, Climatec shall indemnify and hold harmless Purchaser, its officers, officials and employees from and against all liabilities, damages, losses and expenses (including reasonable attorney fees and court costs), caused by, arising out of, or resulting from the negligence, recklessness or intentional wrongful conduct of Climatec, its subcontractors, employees or any other persons used by Climatec or its subcontractors (hereinafter collectively "Climatec") related to the Services in the performance of this Agreement. Climatec LLC's duty to indemnify and hold harmless Purchaser, its officers, officials and employees shall arise in connection with any claim, damage, loss or expense that is attributable to bodily injury, sickness, disease, death, or injury to, impairment, or destruction of property including loss of use of resulting therefrom, caused by Climatec LLC's negligence, recklessness or intentional wrongful conduct in the performance of this Agreement and the negligence, recklessness or intentional wrongful

conduct of any person employed by Climatec or used by Climatec in the performance of this Agreement. Such indemnity does not extend to Purchaser's negligence, recklessness or intentional wrongful conduct.

5. Occupational Safety and Health: The Parties hereto agree to notify each other immediately upon becoming aware of any alleged violation of, the Occupational Safety and Health Act (OSHA) relating in any way to the project or project site.

6. Entire Agreement: This Agreement, upon acceptance, shall constitute the entire agreement between the parties and supersedes any prior representations or understandings.

7. Changes: No change or modification of any of the terms and conditions stated herein shall be binding upon either Party unless accepted by both Parties in writing.

8. Severability: If one or more of the provisions of this Agreement are held to be unenforceable under laws, such provision(s) shall be excluded from these terms and conditions and the remaining terms and conditions shall be interpreted as if such provision were so excluded and shall be enforced in accordance to their terms and conditions.

9. Counterparts: This Agreement may be executed in multiple counterparts, each of which shall be deemed an original and all of which together shall constitute one and the same instrument. A signature on a copy of this agreement received by either party by facsimile or portable document format (PDF) is binding upon the other party as an original. The parties shall treat a photocopy of such facsimile as a duplicate original.

10. Assignment: Climatec LLC retains the right to assign its rights and obligations of this Agreement with written consent of Purchaser.

11. Acknowledgment: Both Climatec LLC and the Purchaser acknowledge having read this Agreement and all contract documents incorporated herein and have executed this agreement on the date written above.

12. NOTICES. This Agreement shall be managed and administered on behalf of the respective parties by the individuals identified below. All invoices shall be submitted to and approved by the Purchaser's representative so identified. In addition to personal service, all notices may be given to Purchaser and to Climatec LLC by first class mail addressed to said party.

Climatec LLC:
2851 W. Kathleen Rd.
Phoenix, AZ 85053
Contact Person:
Taylor Jones
M&V Leader
602-906-1736
TaylorJ@Climatec.com

Town of Chino Valley:
202 N. State Route 89
Chino Valley, AZ 86323
Contact Person:
Robert Smith
Town Manager
928-636-2646
rsmith@chinoaz.net

13. Non-Appropriations. This Agreement is subject in all respects to the provisions of the Arizona Constitution, article IX, §5, A.R.S. § 42-17106, and applicable Arizona common law.

14. E-Verify Requirements. To the extent applicable under A.R.S. § 41-4401, Climatec LLC and its subcontractors warrant compliance with all federal immigration laws and regulations that relate to their employees and compliance with the E-verify requirements under A.R.S. § 23-214(A). Climatec LLC's, or its subcontractor's, breach of the above-mentioned warranty shall be deemed a material breach of this Agreement and may result in the termination of this Agreement by the Purchaser. The Purchase retains the legal right to randomly inspect the papers and records of Climatec LLC and its subcontractors who work on this Agreement to ensure that Climatec LLC and its subcontractors is complying with the above-mentioned warranty.

Climatec LLC and its subcontractors warrant to keep the papers and records open for random inspection by the Purchaser during normal business hours. Climatec LLC and its subcontractors shall cooperate with the Purchaser's

random inspections including granting the Purchaser entry rights onto its property to perform the random inspections and waiving their respective rights to keep such papers and records confidential.

15. Non-Boycott of Israel. Climatec LLC hereby certifies that it is not currently engaged in, and agrees for the duration of this Agreement that it will not engage in, a boycott of Israel, as that term is defined in A.R.S. § 35-393.

16. Approval: Each party represents that the person that has executed this Agreement on its' behalf is authorized to do so.

Town of Chino Valley, AZ	**Climatec, LLC**
_____	_____
Signature	Signature
_____	_____
Print Name	Print Name
_____	` _____
Title	Title
_____	_____
Date	Date

Approved As To Form

_____

Town Attorney

Attachment "A"

Guaranteed Savings Measurement & Verification

Attachment A

Guaranteed Savings Measurement & Verification

This document contains the energy savings Measurement and Verification (M&V) plan for the Energy Conservation Measures (ECMs) contained in the Purchaser's Installation Agreement. The following table summarizes the ECMs proposed. – See below Table 1.0

TABLE 1.0

Site	Lighting System Upgrades	HVAC System Installation	HVAC Control Upgrades
Animal Control	X		X
Community Center	X		X
Court Building	X		X
Library	X	X	X
Old Food Bank Building	X		
Police Department	X	X	X
Pool - Aquatic Buildings and Ball Fields	X		X
Public Works	X		X
Roads Department	X		X
Senior Center	X		X
Shop/Police Department Mobile	X		X
Town Hall	X		X
Waste Water Treatment Plant	X		
Parks	X		
Street Lights/Traffic Signals	X		
Bright Star Pumps/Wells	X		
Country West Pumps/Wells	X		

A specific Measurement and Verification Plan is submitted for each Energy Conservation Measure (ECM) to provide a comprehensive overall Plan for Purchaser. Energy savings are to be compared to the Utility Baseline Summary, as shown in Attachment B. Each measure's M&V Plan provides:

- A description of how the savings shall be verified for each ECM.
- Selection of specific protocol for verification of savings of each ECM.
- Requirements for measurement or other means to establish the ECM savings.

Climatec LLC is responsible for the pre-retrofit measurement, energy savings calculations, equipment installation, and required post retrofit verification as outlined herein. Purchaser agrees to operate and maintain all equipment installed. **Proper operation and maintenance of equipment and systems is critical to long-term achievement of energy savings.**

SAVINGS GUARANTEE

Per ARS 15-213.01, Climatec LLC warrants that Purchaser shall realize total utility savings and utility rebates ("Guaranteed Project Savings") in excess of the project cost during the course of the useful life of the installed equipment (estimated to be 15 years). The utility component of the above guaranteed project savings is based on annual reduction in utility usage of 659 MMBtu/yr. The effective date will begin on the date of final acceptance of the Installation project and receipt of final payment for the associated Installation Contract and continue for a term not to exceed 15 years (Guarantee Period). Guarantee period meets ARS 15-213.01 guidelines to which equipment and installation costs do not exceed guarantee amount for guarantee period for equipment useful life. Climatec LLC agrees to complete the M&V Report on an annual basis and deliver to the Purchaser within sixty (60) days of the anniversary date of final acceptance and annually thereafter. Project Savings that are verified during the course of construction will be applied to guaranteed project savings.

In the event that an annual M&V Report savings value (including any excess savings from previous years) does not meet the Guaranteed Project Savings in accordance with the M&V Plan, then Climatec LLC shall issue a check for the shortfall to the District within 30 days of acceptance of the annual verification report. However, under no circumstances will the amount(s) paid for the total of the energy savings shortfalls exceed **$596,635** **"**Installation Contract Amount".

If the annual M&V Report demonstrates that the project will achieve one hundred percent (100%) or more of the Guaranteed Project Annual Savings, then Climatec LLC shall have satisfied its energy performance guarantee obligation and the Purchaser shall accept the M&V Report. .

The Purchaser agrees that energy savings, which exceed the guaranteed amount in any one (1) year, may be applied to previous or future year's savings to offset an energy savings shortfall. The savings guarantee will remain in effect for the term of this agreement. Cancellation of this agreement will result in the termination of the savings guarantee.

The Utility Baseline Summary, as shown in Attachment B, may be modified over the course of the Guarantee Period to adjust for changes in utility rates, number of days in utility billing cycle, square footage, energy using equipment, building occupancy and weather. This Guarantee is subject to the Purchaser's adherence to the Standards of Operation for Lighting and HVAC systems, as documented in Attachment "C" of this agreement.

MEASUREMENT AND VERIFICATION METHODS

Measurement and Verification (M&V) of energy savings is a methodology based on standard industry protocol intended to provide reasonable assurance that energy savings calculated are realized over the term of the contract.

The development of the M&V plan is based on the IPMVP-2001 (International Performance Measurement and Verification Protocol) and the application of sound engineering and business guidelines to the overall need for verification of energy savings for each ECM. This plan contains methodology that shall cost effectively provide assurance of equipment savings through short term or spot measurements, engineering calculations and/or direct utility billing comparisons. The necessary components to a well-established M & V Plan are:

- Specific identification of each ECM and proposed M & V. Reporting requirements for overall savings.
- Participation of all parties and any necessary coordination with independent review.

Methods of M&V vary in accordance with the type of project, level of assurance of savings, cost, and availability of data, financing constraints, and energy costs. The methods selected must be cost effective given the financial savings to the Purchaser. The methods used for the ECMs detailed herein were selected to minimize M&V cost while still providing a reasonable assurance of the savings calculations.

The IPMVP-2001 guideline provides the following options related to methodology for M&V:

Option A – Partially Measured Retrofit Isolation. Option A uses a combination of stipulated and/or measured factors to calculate baseline usage and savings associated with the ECM. Spot or short-term measurement would be used for the measured values. Stipulated values are supported by Purchaser input, historical data, or manufacturer data.

- Baseline and savings calculations are provided through engineering calculations, component or system models.
- Depending on number of points measured, Option A provides the least cost alternative to M&V.

Option B – Retrofit Isolation. Option B provides for measurement to provide data for assessing values or variables. Spot or short-term measurement, taken at the component and/or system level are taken when variations in factors can be accounted for or eliminated. Continuous measurement at the component and/or system level can also be used to account for the variations in factors over time.

- Baseline and savings calculations are provided through engineering calculations, component or system models.
- Cost is variable depending on the points measured, and the term of the measurement process used. Option B provides a better scenario for ECMs where a small number of factors can be accurately measured with a measurement plan.

Option C – Whole Building. Option C involves the use of utility meters or whole building sub-metering to assess the energy performance of the entire building. After an ECM is implemented the billing data is assessed in accordance with an approved plan to determine actual ECM savings.

- Baseline is established through utility data and engineering/regression analysis.
- Engineering calculations or modeling initially provides estimated ECM savings.
- Actual ECM savings are based on the utility or metered data. Savings must be adjusted for changes in building operation and variables assumed in the engineering calculations or modeling (such as weather, occupancy, etc.).
- Cost of this approach is variable based on the availability of utility data, sub-metered data, and overall savings guarantee. If the metered data is used for a savings guarantee, all variables related to building performance must be measured and adjusted, usually on an annual basis. Option C usually requires a substantial amount of time and effort to establish the baseline, provide adjustments and track the savings.

Option D – Calibrated computer simulation. Option D uses computer-modeling techniques to provide an engineering model of component and/or system performance. The inputs to the computer simulation may be made by engineering estimates, short or long term measurements, and utility or other metered data. Once the model is properly calibrated it is used for the establishment of the baseline and savings by changing appropriate inputs.

- Baseline is established through a calibration process for the computer modeling. Appropriate measurements and inputs are reflected against regression analysis for the metered data.
- Once the model is calibrated and the baseline established inputs are varied for the proposed ECM to establish savings.
- Actual ECM savings are stipulated based on the computer model. There may be follow up calibration of the model with the ECM in place to affirm the overall building simulation model.
- Cost of this method varies based on the complexity and accuracy of model desired, availability of data and overall measurement required.

SELECTED MEASUREMENT AND VERIFICATION OPTIONS

For the ECM's covered under this M&V plan, the Table of Selected M&V Options, located on the following page summarizes the proposed **IPMVP Options selected**: See table 1.1 below

TABLE 1.1

Site	Lighting System Upgrades	HVAC System Installation	HVAC Control Upgrades
Animal Control	A		A
Community Center	A		A
Court Building	A		A
Library	A	A	A
Old Food Bank Building	A		
Police Department	A	A	A
Pool - Aquatic Buildings and Ball Fields	A		A
Public Works	A		A
Roads Department	A		A
Senior Center	A		A
Shop/Police Department Mobile	A		A
Town Hall	A		A
Waste Water Treatment Plant	A		
Parks	A		
Street Lights/Traffic Signals	A		
Bright Star Pumps/Wells	A		
Country West Pumps/Wells	A		

The particular option selected for each ECM was based on a number of related issues including: ECM cost, ECM savings, cost of Measurement and Verification and the ability to accurately determine whole building operations.

The baseline and the post-installation energy use depend on various system and external factors, such as energy demand, operating hours, weather conditions, motor loading, energy rates, and occupancy. Development of the baseline, post ECM consumption, cost avoidances and simple payback for each ECM covered by this M&V plan includes:

- Stipulated Values – These values are important in the overall calculations for energy consumption, financial calculations, and operating conditions. Climatec LLC and Purchaser have agreed to these values for purposes of establishing savings.
- Developed/Measured Values – These are the values determined by spot or short-term measurement. Values are determined based on a sound engineering approach to variable determination. Both values used for baseline consumption and values to be measured/determined as parts of the post ECM implementation are detailed.
- Assumptions – Some values that are assumed in order to calculate energy use are necessary in certain circumstances.

- Calculations – The necessary calculations for baseline energy and demand usage, the calculation of the energy and demand components with implementation of the ECM, the calculation of costs, and annual savings are the primary tool for assessing the estimated and actual savings of any ECM.
- Instrumentation – The type and specifications, if applicable, for any instrumentation used for developed/measured values is provided to ensure appropriate meters and measurement equipment is used for specified applications.
- Pre Retrofit Measurements – Each ECM may have a section detailing the measurements required prior to the retrofit. These measurements are used to establish the baseline or adjustments required to establish an accurate baseline.
- Post Retrofit Measurements – Each ECM may have a section that details the measurements required if any after the retrofit is completed. This section is utilized to detail the type of measurements required for verification of the energy savings calculations.
- Adjustments – Each ECM may have a section for adjustments. This section includes possible adjustments to the actual Energy Audit Report and energy information, appropriate adjustments to the M&V plan, and adjustments to any savings guarantee. This section is utilized to anticipate changes necessary due to field conditions and provide an appropriate response in the verification of actual energy and cost avoidances.
- Commissioning – Each ECM may have a section regarding the commissioning process. This provides the detail for how the savings will be verified upon project completion, and the type of inspection that will be completed, and the billing method for verified savings. This section is utilized to provide a standard approach for each ECM upon project completion.

Climatec LLC will follow the agreed-upon M&V protocols for the measurement period and will prepare post-installation reports with supporting documentation for the Purchaser. The cost of M&V is included in the project cash flow requirements.

SPECIFIC MEASUREMENT AND VERIFICATION PLAN

"OPTION A"
FOR LIGHTING SYSTEM UPGRADES

Introduction
This Measurement and Verification Plan (M&V) is specific to all lighting retrofits and occupancy sensor installations. The sites receiving these upgrades are listed in the Table of Recommended Measures located at the beginning of this Attachment.

M&V Protocol
For this ECM, IPMVP Protocol – Option A shall be utilized. This option provides for the measurement of at least one variable pre and post retrofit with other variables allowed for stipulation. For this retrofit, a representative sample of each of the fixture types will be measured. The same sample will be used for both pre and post retrofit calculations. Wattage shall be measured with an appropriate instrument that is properly calibrated.

Light Levels
A representative sample of the light levels shall be measured. Where rooms have similar or identical lighting design, it is not required that each room be measured. Light levels shall be measured by an appropriate instrument that is properly calibrated. Light level measurements apply to both pre and post retrofit areas and shall be recorded at the work surface. Where rooms do not have a specific work surface light levels shall be measured at the floor.

Documentation
All areas measured shall be documented. The data shall indicate areas that do not meet IESNA standard light level requirements. All instrumentation used shall be clearly documented.

Stipulated Values
Operating Hours are stipulated for purposes of M&V. Please see Attachment "C", Lighting Standards of Operation for a complete list of lighting hours of operation.

Savings Calculations
The calculations for the baseline energy consumption and post retrofit savings provide the basis for the overall financial viability of this ECM.

kWh and/or kW Savings
The electrical consumption reduction of a particular lighting ECM is determined by comparing the pre and post conditions applied to the hours agreed upon in the Standards of Operation.

{[(Existing watts/fixture) x (existing quantity) x (existing hours of operation)] –
[(proposed watts/fixture) x (proposed quantity) x (proposed hours of operation)} / 1000 = kWh savings

Dollar Savings
After calculating the kWh saved, the specific facility's average cost per kilowatt hour shall be used to determine dollar savings.

(kWh saved) x (average kWh rate) = $ kWh saved
($ kWh saved) = the total dollars saved

Operational Savings

The Purchaser will realize maintenance and operational savings resulting from the new lighting system installations, extended warranties, and/or service agreements provided by Climatec LLC. The operational savings are stipulated and met upon the completed installation of the energy retrofit contract.

Adjustments

For this ECM the following adjustments are allowed for purposes of Measurement and Verification:

- Light level requirements may be modified as detailed in this plan.
- Changes in actual construction including number and/or type of fixtures. All changes shall be clearly documented and provided to the Purchaser's representative.

Commissioning

Commissioning shall consist of inspections and a final savings verification report. Inspections shall consist of:

- During the construction phase of the project, Climatec LLC shall keep a detailed record of the quantity and types of fixtures retrofitted and fixtures installed in each building. A post construction inspection is required by the responsible M&V party.
- After lighting modifications have been made, the installations shall be inspected to verify the retrofit counts by fixture code.
- Post retrofit lighting levels shall be measured to verify compliance with the contract standards.

SPECIFIC MEASUREMENT AND VERIFICATION PLAN

"OPTION A"
FOR HVAC SYSTEMS INSTALLATION

Introduction

This Measurement and Verification Plan (M&V) is specific to the installation of new high efficiency HVAC units at the sites listed in the Table of Recommended Measures located at the beginning of this Attachment.

M&V Protocol

For this ECM, IPMVP Protocol – Option A shall be utilized. This option shall provide for the measurement of at least one variable pre and post retrofit with other variables allowed for stipulation. For this retrofit, field data shall be collected which includes, unit counts, unit tonnage, nameplate horsepower and efficiency rating for each existing HVAC system.

Stipulated Values

Hours of Operation, heating/cooling loads and runtime hours of the existing HVAC systems are stipulated for purposes of M & V. Please refer to Attachment C, HVAC Standards of Operation in this agreement for specific operating hours and runtime hours for each HVAC unit or area. Stipulated values are agreed to by Purchaser.

Calculations

The calculations for the baseline energy consumption and post-retrofit savings provide the basis for the overall financial viability of these ECM's. The following equations summarize the calculation of savings:

Electric (kWh) Savings

The electrical usage reduction of this ECM is determined by the following equation:

((Size of Existing HVAC Unit) x (Unit Efficiency) x (Stipulated Load Factor) - (Size of New Cooling Unit) x (Unit Efficiency) x (Stipulated Load Factor)) x (Annual Operating Hours) = kWh Savings

Dollar Savings

After calculating the kWh saved, the specific facility's average cost per kilowatt hour shall be used to determine dollar savings.

(kWh saved) x (average kWh rate) = $ kWh saved
($ kWh saved) = Total dollars saved

Operational Savings

The Purchaser will realize maintenance and operational savings resulting from the new system installations, extended warranties, and/or service agreements provided by Climatec LLC. The operational savings are agreed to be met upon the completed installation of the energy retrofit contract.

Pre Retrofit Measurements

None required for this ECM.

Post Retrofit Measurements

None required for this ECM.

Adjustments

None required for this ECM.

Commissioning

Commissioning shall consist of inspections, and a final Commissioning report. The Inspections and Report shall consist of:

- Commissioning of the newly installed HVAC equipment shall include verification that each new unit is operating, as specified, in all modes (heat/cool).

SPECIFIC MEASUREMENT AND VERIFICATION PLAN

"OPTION A"
FOR HVAC CONTROLS UPGRADE

Introduction

This Measurement and Verification Plan (M&V) is specific to the energy management system upgrades at the sites listed in the Table of Recommended Measures located at the beginning of this Attachment.

M&V Protocol

For this ECM, IPMVP Protocol – Option A shall be utilized. This option shall provide for the measurement of at least one variable pre and post retrofit with other variables allowed for stipulation. The cooling and heating setpoints during occupied and unoccupied modes of the HVAC equipment will be verified and documented. For this retrofit, field data shall be collected which includes, unit counts, unit tonnage, nameplate horsepower, efficiency rating, operating schedules, cooling and heating temperature setpoints for each HVAC system.

Stipulated Values

Hours of operation and heating/cooling load factors are stipulated for purposes of M&V. Please refer to the Attachment C, HVAC Standards of Operations for specific existing and proposed operating hours for each HVAC unit or area. Stipulated values are agreed to by Purchaser.

Calculations

The calculations for the baseline energy consumption and post retrofit savings provide the basis for the overall financial viability of these ECM's. Post-retrofit operating schedules and trend reports will be used to verify the inputs such as operating hours, cooling/heating temperature setpoints that are used in the calculations to validate the savings. The following equations summarize the calculation of savings:

Electric (kWh) Savings

The electrical usage reduction of this ECM is determined by applying the stipulated runtime reduction to the calculated energy usage of the HVAC unit.

(Size of HVAC unit) x (Unit efficiency) x (Stipulated load factor) x (Existing annual operating hours – Proposed annual operating hours) = kWh savings

Natural Gas (Therms) Savings

The natural gas usage reduction of this ECM is determined by applying the stipulated runtime reduction to the calculated energy usage of the HVAC unit.

(Size of Heating unit) x (Unit efficiency) x (Stipulated load factor) x (Existing annual operating hours – Proposed annual operating hours) = Therm savings

Dollar Savings

After calculating the kWh saved and the Therms saved, the specific facility's average cost per kilowatt hour and the average cost per Therm of natural gas shall be used to determine dollar savings.

(kWh saved) x (average kWh rate) = $ kWh saved
(Therms saved) x (average Therm rate) = $ Therms saved
($ kWh saved) + ($ Therms saved) = Total dollars saved

Operational Savings

The Purchaser will realize maintenance and operational savings resulting from the new system installations, extended warranties, and/or service agreements provided by Climatec LLC. The operational savings are agreed to be met upon the completed installation of the energy retrofit contract.

Pre Retrofit Measurements

Existing operating hours and cooling/heating temperature setpoints for each HVAC unit or area will be obtained from current thermostats/EMS.

Post Retrofit Measurements

Post-retrofit operating schedules, cooling and heating temperature setpoints in both occupied and unoccupied modes for the HVAC equipment will be obtained using the new controls system.

Adjustments

For this ECM the following adjustments are allowed for purposes of Measurement and Verification:

- Addition or subtraction to the conditioned square footage of facilities.
- Utility rates, billing days or degree days.
- Equipment changes.
- Increase or decrease in facility usage as associated with daily occupancy times and special events.

Commissioning

Commissioning shall consist of inspections, and a final Commissioning report. The Inspections and Report shall consist of:

- Commissioning of the newly installed energy management system (EMS) shall include verification that the operating schedules, cooling and heating temperature set points and the control sequences for the HVAC equipment have been programmed as specified.

Attachment "B"

Utility Baseline Summary

Energy Baseline

				Utility Baseline Summary	
Town of Chino Valley			4/1/2015	through	3/30/2016
Site Name	**Address**	**Square Footage**	**Dollars Electric**	**kWh**	**$ / kWh**
Animal Control	1950 Voss Dr, Chino Valley, AZ 86323	1,500	$2,036	10,780	$0.189
Community Center	1527 N Road 1 East Chino Valley, AZ 86323	4,004	$2,036	10,780	$0.189
Court Building	1985 N Road 1 West Chino Valley, AZ 86323	3,544	$4,685	24,880	$0.188
Library	1020 W Palomino Rd. Chino Valley, AZ 86323	6,476	$4,709	26,942	$0.175
Old Food Bank Bldg - did PD take over?	1943 Voss Dr. Chino Valley, AZ 86323	1,242	$19,100	102,880	$0.186
Police Department	1950 Voss Dr, Bldg #301 Chino Valley, AZ 86323	2,839	$2,159	11,375	$0.190
Police Dept - Shooting Range - confirm	2178 Sgt Dee Barnes Way Chino Valley, AZ 86323		$10,781	68,330	$0.158
Pool - Aquatics Bldg & Ball Fields	1615 N Road 1 East Chino Valley, AZ 86323	7,091	$2,944	15,320	$0.192
Public Works	1982 Voss Dr Chino Valley, AZ 86323	3,923	$40,189	190,240	$0.211
Roads Dept	2204 Old Home Manor Dr. Chino Valley, AZ 86323	1,792	$5,564	30,560	$0.182
Senior Center / Well	1021 W Butterfield Rd. Chino Valley, AZ 86323	4,524	$1,520	6,000	$0.253
Shop / Police Dept Mobile	1910 Voss Dr. Chino Valley, AZ 86323	2,975	$14,109	80,280	$0.176
Town Hall	202 N Highway 89 Chino Valley, AZ 86323	5,256	$6,347	35,280	$0.180
Waste Water Treatment Plant	2190 Rodeo Dr. Chino Valley, AZ 86323		$11,637	70,720	$0.165
Parks	Various		$97,194	924,000	$0.105
Street Lights / Traffic Signals	Various		$4,319	10,452	$0.413
Bright Star Pumps / Wells	Various		$8,420	40,035	$0.210
Country West Pumps / Wells	853 N. Highway 89 Chino Valley, AZ 86323		$46,346	189,120	$0.245
Other Pumps / Wells	Various		$9,922	30,560	$0.325
Cameron Property (Paulden) - vacant	2440 N Troy Lane Paulden, AZ 86334		$19,687	108,183	$0.182
Unknown	2998 N State Route 89 Chino Valley, AZ		$4,037	26,380	$0.153
Project Total		**45,166**	**$318,568**	**2,018,093**	**$0.16**

CLIMATEC
MERGING BUILDINGS & TECHNOLOGY

Attachment "C"

Standards of Operation for HVAC & Lighting

STANDARDS OF OPERATION:

The hours of operation for the Purchaser's Lighting and HVAC systems, located on the following pages, were used to calculate the energy savings in the Savings Summary section of this agreement and will be used in all measurement and verification calculations.

Town of Chino Valley HVAC Standard of Operations						
Facility	Control System	Days of Week	Daily HVAC Schedule		Temperature Setpoints	
			Start Time	Stop Time	Cooling	Heating
Animal Control	Push to Run*	Mon - Thurs	9:00 AM	2:00 PM	All Areas: Occupied Setpoint: 76°F Unit will operate at 2 hour increments	All Areas: Occupied Setpoint: 68°F Unit will operate at 2 hour increments
Community Center	Push to Run*		Events only		All Areas: Occupied Setpoint: 76°F Unit will operate at 2 hour increments	All Areas: Occupied Setpoint: 68°F Unit will operate at 2 hour increments
Court Building	Network T-Stat	Mon - Thurs	7:30 AM	5:00 PM	All Areas: Occupied Setpoint: 76°F Unoccupied Setpoint: 85°F Occupied Setpoint will have ± 2°F Local Adjustability System will register room as unoccupied setpoint if no motion is detected for 30 min	All Areas: Occupied Setpoint: 68°F Unoccupied Setpoint: 55°F Occupied Setpoint will have ± 2°F Local Adjustability System will register room as unoccupied setpoint if no motion is detected for 30 min
Library	Network T-Stat	Mon - Fri. Weekend	8:30 AM Sat 10 AM - 2 PM	6:00 PM	All Areas: Occupied Setpoint: 76°F Unoccupied Setpoint: 85°F Occupied Setpoint will have ± 2°F Local Adjustability System will register room as unoccupied setpoint if no motion is detected for 30 min	All Areas: Occupied Setpoint: 68°F Unoccupied Setpoint: 55°F Occupied Setpoint will have ± 2°F Local Adjustability System will register room as unoccupied setpoint if no motion is detected for 30 min
Police Department	Network T-Stat	Mon - Sun.	24/7		All Areas: Occupied Setpoint: 76°F Unoccupied Setpoint: 85°F Occupied Setpoint will have ± 2°F Local Adjustability System will register room as unoccupied setpoint if no motion is detected for 30 min	All Areas: Occupied Setpoint: 68°F Unoccupied Setpoint: 55°F Occupied Setpoint will have ± 2°F Local Adjustability System will register room as unoccupied setpoint if no motion is detected for 30 min
Pool - Aquatics Bldg & Ball Fields	Push to Run*	Mon. - Sun Seasonal**	5:30 AM	9:00 PM	All Areas: Occupied Setpoint: 76°F Unit will operate at 2 hour increments	All Areas: Occupied Setpoint: 68°F Unit will operate at 2 hour increments
Public Works	Network T-Stat	Mon - Thurs	7:30 AM	5:00 PM	All Areas: Occupied Setpoint: 76°F Unoccupied Setpoint: 85°F Occupied Setpoint will have ± 2°F Local Adjustability System will register room as unoccupied setpoint if no motion is detected for 30 min	All Areas: Occupied Setpoint: 68°F Unoccupied Setpoint: 55°F Occupied Setpoint will have ± 2°F Local Adjustability System will register room as unoccupied setpoint if no motion is detected for 30 min
Roads Dept	Push to Run*	Mon - Thurs	7:30 AM	5:30 PM	All Areas: Occupied Setpoint: 76°F Unit will operate at 2 hour increments	All Areas: Occupied Setpoint: 68°F Unit will operate at 2 hour increments
Senior Center / Well	Network T-Stat	Mon - Fri.	8:00 AM	5:00 PM	All Areas: Occupied Setpoint: 76°F Unoccupied Setpoint: 85°F Occupied Setpoint will have ± 2°F Local Adjustability System will register room as unoccupied setpoint if no motion is detected for 30 min	All Areas: Occupied Setpoint: 68°F Unoccupied Setpoint: 55°F Occupied Setpoint will have ± 2°F Local Adjustability System will register room as unoccupied setpoint if no motion is detected for 30 min
Shop / Police Dept Mobile	Push to Run*	Mon - Thurs	7:30 AM	5:00 PM	All Areas: Occupied Setpoint: 76°F Unit will operate at 2 hour increments	All Areas: Occupied Setpoint: 68°F Unit will operate at 2 hour increments
Town Hall	Network T-Stat	Mon - Thurs Fri.	8:00 AM 8:00 AM	5:00 PM 12:00 PM	All Areas: Occupied Setpoint: 76°F Unoccupied Setpoint: 85°F Occupied Setpoint will have ± 2°F Local Adjustability System will register room as unoccupied setpoint if no motion is detected for 30 min	All Areas: Occupied Setpoint: 68°F Unoccupied Setpoint: 55°F Occupied Setpoint will have ± 2°F Local Adjustability System will register room as unoccupied setpoint if no motion is detected for 30 min

* HVAC control system to be operated manually. Reference schedules are the expected building occupancy.
** Operates between late March and Early September

Town of Chino Valley **Lighting Standards of Operations**

Space Usage	Animal Control	Community Center	Court Building	Library	Old Food Bank Bldg	Police Department	Pool - Aquatics Bldg & Ball Fields	Public Works	Roads Dept	Senior Center / Well	Shop / Police Dept Mobile	Town Hall	Waste Water Treatment Plant	Parks	Street Lights / Traffic Signals	Bright Star Pumps / Wells	Country West Pumps / Wells
24/7						8760											
Admin Open Area	2200	1500	1500	2500	800	3500	1500	2800	900	2800	2500	2500	2300			800	300
Dusk/Dawn	4380	4380	1460	4380	4380	4380	4380	4380	3800	4380	4380	4380	4380	4380	4380	4380	4380
Kitchen		800					1200			2800							
Library				2500													
Mech/Elec		300					500	800	900	800							
Office Admin		1500	1500	1800		2500	1500	2150		2200	1800	1800					
Private Restroom			500	500	500	500		500	500								
Restroom		800	1500	1500			1200			1500	800	1500		2000			

TOWN OF CHINO VALLEY
COUNCIL AGENDA ITEM STAFF REPORT

Town Council Regular Meeting **Item No. 7. b.**

Meeting Date: 08/09/2016

Contact Person: Cecilia Grittman, Assistant Town Manager
Phone: 928-636-2646 x-1202

Department: General Services

Item Type: Action Item - Presentation

Estimated length of staff presentation: 10 minutes

Physical location of item: Chino Valley Chamber of Commerce, 175 E Road 2 South

---

AGENDA ITEM TITLE:

Consideration and possible action to approve the First Amendment to Accountability Contract and Scope of Services, between the Town of Chino Valley and the Chino Valley Area Chamber of Commerce for FY 16/17 in an amount of Thirty-Eight Thousand ($38,000.00) dollars. (Cecilia Grittman, Assistant Town Manager)

RECOMMENDED ACTION:

Move to approve the First Amendment to Accountability Contract and Scope of Services between the Town of Chino Valley and the Chino Valley Area Chamber of Commerce for FY 16/17 in the amount of Thirty-Eight Thousand ($38,000.00) dollars.

SITUATION AND ANALYSIS:

On October 13, 2015 the Town and the Chino Valley Area Chamber of Commerce entered into an Accountability Contract for services. The Agreement automatically renews for up to five (5) years, with the Scope of Services being updated annually to reflect the needs of the Town and the available resources and strengths of the Chino Valley Chamber. The Scope of Services has been created through a cooperative effort between Town of Chino Valley staff and the Chamber's Executive Director and Board President.

The Chamber is a strong resource to support local businesses and help to grow the local economy. The Chamber works cooperatively with the Town's economic development efforts to secure business and economic development improvements for the community and the region. The Scope of Work reflects the cooperative efforts between the two entities.

Fiscal Impact

Fiscal Impact?: Y

If Yes, Budget Code: 38,000.00

Available:

Funding Source:

Attachments

First Amendment to Accountability Contract
FY 2016/2017 Scope of Work

FIRST AMENDMENT
TO
ACCOUNTABILITY CONTRACT BETWEEN THE TOWN OF CHINO VALLEY, ARIZONA
AND
CHINO VALLEY CHAMBER OF COMMERCE

This First Amendment to the Accountability Contract between the Town of Chino Valley and the Chino Valley Chamber of Commerce is made and entered into this ___ day of August, 2016, with an Effective Date of July 1, 2016 by and between the Town of Chino Valley, a municipal corporation of the State of Arizona (the "Town") and Chino Valley Chamber of Commerce, an Arizona non-profit corporation (the "Chamber"). Town and Chamber are collectively referred to herein as the "Parties".

I. RECITALS

A. The Parties entered into an Accountability Contract effective October 13, 2015 (the "Contract") through June 30, 2016 and automatically renewing each year for up to five (5) successive one-year terms, effective July 1 of each successive year. The Parties are, therefore, in the first renewal year at the time of this First Amendment.

B. The Parties desire to make changes to their obligations by adopting a new Scope of Work for fiscal year 2016-2017.

II. AGREEMENTS

Now, therefore, in consideration of the agreements and promises hereinafter set forth and those set forth in the Contract, the Parties agree to amend the Contract as follows:

1. Section 3 Scope of Services is amended as follows:

3.1 Chamber Responsibilities. Chamber agrees to use funds received from Town to provide Visitor Center and services ("Scope of Services"), as set forth in Exhibit B, which is attached hereto and incorporated herein and to use the funds from the Town for those purposes only. Chamber also agrees to maintain accurate financial records to enable Town to verify that the funds provided under this Agreement are expended in accordance with this Agreement. Chamber shall be responsible for compliance with all applicable federal, state and local laws and regulations.

3.2 Town Responsibilities. Town shall:

3.2.1 Pay the match portion (a total of $1820.50 in total) of the match grant received by Chamber from the Arizona Office of Tourism m for the 2016-2017 fiscal year.

3.2.2 Provide Chamber with new and renewed business license information monthly and, as available, provide Chamber with other pertinent economic development information.

3.2.3 Act as a pass-through agent for and, at its discretion, otherwise partner with Chamber in seeking and applying for grant funds through USDA and similar agencies.

3.2.4 Assist the Chamber, if needed, by providing statistical information or gathering necessary information for grant applications, if the Town has access to or collects such information.

3.2.5 Provide to the Chamber a used computer to facilitate Chamber's program to provide assistance to small businesses.

3.2.6 Not produce events that compete with the Chamber Fall Fest and Chino Valley Heritage Festival events.

3.2.7 In the Town's sole discretion and in compliance with its internet and social media policies, include Chamber events on its calendar and website.

3.2.8 Upon request by Chamber, disclose to Chamber any information that pertains to the business community that may be reasonably, legally and practically released.

2. The "Provisions of Agreement FY 15-16 Scope of Services", attached to the Contract as Exhibit A, is hereby superseded and replaced by the "Provisions of Agreement Fiscal Year 2016-2017 Scope of Services", attached to this First Amendment as Exhibit B.

Except as amended above, all other terms and conditions of the Contract shall remain in full force and effect.

IN WITNESS WHEREOF, the Parties have executed this First Amendment to the Accountability Contract between the Town of Chino Valley and the Chino Valley Chamber of Commerce, effective October 13, 2015, which shall become effective retroactively to July 1, 2016.

THE TOWN OF CHINO VALLEY	Chino Valley Chamber of Commerce
By:_____	By:_____
Chris Marley, Mayor	Arlene Alen, CEO

ATTEST:

_____

Jami Lewis, Town Clerk

EXHIBIT B
Provisions of Agreement Fiscal Year 2016-2017
Scope of Services

The Town of Chino Valley agrees to tender to the Chino Valley Area Chamber of Commerce ("CVACC" or "Chamber") the sum of Thirty-Eight thousand dollars ($38,000.00) for services delineated and outlined in this Agreement.

Now, therefore, in consideration of the mutual promises and covenants of the parties, and other good and valuable consideration, the parties agree as follows:

1. Visitor Center

The Chamber will maintain and staff the Visitor Center located within the Town limits. The Visitor Center will abide by the criteria set forth by the Arizona Office of Tourism ("AOT") to be a State-designated Local Visitor Information Center ("LVIC"). The Visitor Center will be open to the public during normal working hours and staffed adequately to answer all correspondence, telephone, e-mail, or walk-in inquiries for general information relating to Chino Valley. The Visitor Center will be closed on posted Chamber holiday observances; however, a 24/7 kiosk on Chamber premises will be available with community information.

2. Promotion / Marketing

The Chamber will continue or begin the following promotion and marketing activities:

a. Distribute relocation / community guides and maps of the Chino Valley area in coordination with the Town and its GIS division and / or other sources, some of which sources may be members of the Chamber.
b. Provide an opportunity for the Town to host one "Talk of the Town – Chino Valley," radio show per month.
c. Maintain "Platinum Sponsorship" for the Town of Chino Valley at all Chamber events.
d. Continue to expand Visitor Center services and act as resource to visitors and persons who have relocated to the area.
e. Continue to work with the AOT office in administering the AOT grant and producing banner ads.
f. Continue to promote and work to expand the "Shop Local" program in conjunction with Prescott and Prescott Valley.
g. Continue to promote and enhance the Chamber's Small Business Saturday Campaign.
h. Continue to support the Google program, "Put Chino Valley on the Map." to provide assistance, resources and education for small businesses at various program sessions.
i. Ensure that all promotional and printed materials created and distributed by the Chamber with funds from the Town contain a statement recognizing and acknowledging that funding has been provided from the Town for such documents.

3. Economic Development

In order to maintain fairness between the industries and retail businesses inside the Town, the Chino Valley Chamber of Commerce shall practice the concept of being community focused. The Chamber's mission is to promote economic growth and serve as a voice for the business community to enhance the quality of life for Chino Valley.

The Chamber will continue or begin the following economic development activities:

a. Coordinate with Town and other economic development organizations including Northern Arizona Council of Governments, Prescott Valley Economic Development Foundation, Greater Prescott Regional Economic Partnership, and Yavapai College to represent the Chino Valley business sector and to foster business development in the Town.
b. Work with the Town in economic development efforts, focusing on opportunities to increase jobs and if possible, enhance the balance of the retail businesses, restaurants, nightlife, and social activities to attract families, visitors, and residents to live and shop in Chino Valley.
c. Conduct workshops and classes and post surveying community or business needs on topics benefitting or of interest to the business community.
d. In conjunction with the Town, Yavapai College, and other organizations, incorporate a Small Business Resource Center ("SBRC").
e. Assist small businesses navigating through the start-up processes, which may include partnering with the Town's Development Services and Public Works departments regarding permitting and licensing processes, or assisting the small businesses with various state or federal agencies.

4. <u>Partnering with the Town</u>

In addition to the scope of work listed above, the Chamber further agrees, through its partnership with the Town, to perform the following functions:

a. Give Quarterly reports to the Chino Valley Town Council.
b. Upon request, the Chamber Board will participate in an annual joint meeting with the Town Council.
c. With the Town, jointly conduct a "Citizen's Academy" annually.
d. Upon request, the Chamber Chief Executive Officer will meet with new Town Councilmembers, at the CVACC facility to provide the incoming Councilmembers with information about the Chamber's activities and work on behalf of the Town as set forth in this Agreement and other matters related to the Town's economic development.
e. In conjunction with the Town's technology department, where appropriate, explore the feasibility of the following:
    1. Integrating event calendars;
    2. Linking websites;
    3. Mapping – possibility of using Town data for a) business map, b) street maps
f. Continue to develop concepts and implementation strategies for Town and Chamber events. Efforts will include leveraging some existing, recurring events to increase the intensity of such events as well as enhance visitation and tourism; promotion and contact with local businesses, regardless of membership status, to explore and facilitate expansion of recurring events.

g. Produce CVACC Fall Fest and Chino Valley Heritage Festival in the spring, respectively, as Community Development events, and participate at some level in Town events. Participation in Town events can include inclusion on calendar, website, e-mail blasts, and other levels of participation.
h. Where appropriate, participate in Town planning efforts such as General Plan updates and amendments to Town Codes and Ordinances and solicit feedback from the business sector on such proposed amendments.
i. As appropriate, provide feedback on project proposals brought before the Town Council for consideration or approval.
j. As appropriate and as resources are available, work with the Town's Recreation department to enhance resources and communication facilitate streamlining planning for Town and Chamber events.

THIS PAGE INTENTIONALLY LEFT BLANK

TOWN OF CHINO VALLEY
COUNCIL AGENDA ITEM STAFF REPORT

Town Council Regular Meeting **Item No. 7. c.**

Meeting Date:	08/09/2016
Contact Person:	Joe Duffy, Finance Director Phone: 928-636-2646 x-1211
Department:	Finance
Item Type:	Action Item - Presentation
Estimated length of staff presentation:	10 minutes
Physical location of item:	N/A

AGENDA ITEM TITLE:

Consideration and possible action to approve Financial Report for the twelve months ending June 30, 2016. (Joe Duffy, Finance Director)

RECOMMENDED ACTION:

Approve Financial Report for the twelve months ending June 30, 2016.

SITUATION AND ANALYSIS:

The Finance Department prepares Financial Reports for the Mayor, Council, Staff and Community.

Upon Council approval, the reports will be posted on the Town's website.

The report includes the following sections:

Revenue and Expense Summary - This section details the Revenues and Expenditures of each fund. Comparing the year to date figures to the current year's annual budget and the prior year's month to date figures.

Major Revenue Summary - This section details the year to date figures for the Town's eight major revenue sources that account for 60% of the Town's Revenue.

Other Information - This section details other pertinent financial and statistical information including the Impact Fee Fund balance and the amount of General Fund Contingencies that have been allocated this fiscal year and a debt summary.

The Finance Director will supplement these reports with periodic presentations and other information throughout the fiscal year.

The report through June 30,2016 is preliminary and tentative prior to the annual audit being completed.

Fiscal Impact

Fiscal Impact?: No
If Yes, Budget Code:
Available:
Funding Source:

Attachments

Financial Report ending June 30, 2016

Town of Chino Valley

Arizona

Financial Report

To The Town Council

For the Twelve Months Ending June 30, 2016 100% of the Fiscal Year

Town of Chino Valley
Revenue and Expense Summary
For the Twelve Months Ending June 30, 2016 100% of the Fiscal Year

	Actual Year to Date FY 2014-15	Actual Year to Date FY 2015-16		Actual vs Prior Year Amount	% FY 2015-16/ FY 2014-15	Annual Budget FY 2015-16	% of Budget YTD
GENERAL FUND							
General Fund Revenues by Category							
Franchise Taxes	$ 125,124	$ 136,537	*	$ 11,413	9%	$ 134,500	102%
Tax Revenues	$ 3,763,816	$ 3,984,315		$ 220,499	6%	$ 3,904,000	102%
Licenses & Permits	$ 275,407	$ 351,009		$ 75,602	27%	$ 260,000	135%
Intergovernmental	$ 3,119,679	$ 3,158,509		$ 38,830	1%	$ 3,189,500	99%
Charges for Services	$ 94,269	$ 123,567		$ 29,298	31%	$ 108,000	114%
Fines and Forfeitures	$ 138,374	$ 149,759		$ 11,385	8%	$ 140,000	107%
Other Revenues	$ 8,227	$ 5,559		$ (2,668)	-32%	$ 1,500	371%
Contributions and Donations	$ 1,999	$ 2,556		$ 557	28%	$ 3,500	73%
Investment Earnings	$ 1,344	$ 4,107		$ 2,763	206%	$ 500	821%
Transfers In	$ 110,000	$ 260,000		$ 150,000	136%	$ 310,000	84%
Total Revenues	**$ 7,638,239**	**$ 8,175,918**		**$ 537,679**	**7%**	**$ 8,051,500**	**102%**

*** Estimated final quarter accruals.**

Total Revenues for the General Fund are up $537,679 over the previous fiscal year. Licenses and Permits are up 27% due to an increase in Building Permits and Plan Check Fees this fiscal year. Transfers In were increased in the current years budget over the prior year. The total General Fund Revenues are up 7% compared to the last fiscal year.

Town of Chino Valley
Revenue and Expense Summary
For the Twelve Months Ending June 30, 2016 100% of the Fiscal Year

	Actual Year to Date FY 2014-15	Actual Year to Date FY 2015-16	Actual vs Prior Year Amount	Actual vs Prior Year % FY 2015-16/ FY 2014-15	Annual Budget FY 2015-16	% of Budget YTD
General Fund Expenditures by Department						
Prosecutor	$ 121,689	$ 128,741	$ 7,052	6%	$ 130,600	99%
Town Clerk	$ 206,652	$ 216,159	$ 9,507	5%	$ 197,600	109%
Town Manager	$ 415,038	$ 397,008	$ (18,030)	-4%	$ 392,500	101%
Human Recourses	$ 97,924	$ 190,746	$ 92,822	95%	$ 195,300	98%
Municipal Court	$ 313,761	$ 253,257	$ (60,504)	-19%	$ 261,900	97%
Finance	$ 306,953	$ 333,861	$ 26,908	9%	$ 329,200	101%
Management Information System	$ 225,993	$ 229,807	$ 3,814	2%	$ 273,600	84%
Mayor and Council	$ 18,265	$ 26,612	$ 8,347	46%	$ 33,000	81%
Planning	$ 156,880	$ 178,992	$ 22,112	14%	$ 186,300	96%
Building Inspection	$ 270,679	$ 261,404	$ (9,275)	-3%	$ 277,100	94%
Police	$ 2,567,283	$ 2,546,918	$ (20,365)	-1%	$ 2,651,800	96%
Animal Control	$ 126,028	$ 114,720	$ (11,308)	-9%	$ 123,300	93%
Recreation	$ 23,641	$ 68,232	$ 44,591	189%	$ 63,800	107%
Library	$ 298,489	$ 311,125	$ 12,636	4%	$ 309,600	100%
Senior Center	$ 226,901	$ 242,981	$ 16,080	7%	$ 242,400	100%
Parks Maintenance	$ 340,866	$ 397,619	$ 56,753	17%	$ 333,200	119%
Aquatic Center	$ 208,542	$ 210,219	$ 1,677	1%	$ 244,900	86%
Facilities Maintenance	$ 317,879	$ 361,997	$ 44,118	14%	$ 345,900	105%
Fleet Maintenance	$ 261,967	$ 220,629	$ (41,338)	-16%	$ 341,000	65%
Engineering	$ 62,467	$ 147,015	$ 84,548	135%	$ 122,000	121%
Non Departmental	$ 537,220	$ 627,244	$ 90,024	17%	$ 996,500	63%
Total Expenditures	**$ 7,105,117**	**$ 7,465,286**	**$ 360,169**	**5%**	**$ 8,051,500**	**93%**
Total Revenue Over (Under) Total Expenditures	**$ 533,122**	**$ 710,632**	**$ 177,510**		**$ -**	

GENERAL FUND (Continued)

Total General Fund Expenditures are up $360,169 or 5% compared to last fiscal year. Through June each department should be less than 100%. In total the General Fund Departments are at 93% and $586,214 under budget.

Town of Chino Valley
Revenue and Expense Summary
For the Twelve Months Ending June 30, 2016 100% of the Fiscal Year

	Actual Year to Date FY 2014-15	Actual Year to Date FY 2015-16	Actual vs Prior Year Amount	% FY 2015-16/ FY 2014-15	Annual Budget FY 2015-16	% of Budget YTD
HIGHWAY USER REVENUE FUND						
Total Revenues	$ 866,913	$ 934,751	$ 67,838	8%	$ 1,014,000	92%
Expenditures						
Road Maintenance	$ 1,178,288	$ 845,267	$ (333,021)	-28%	$ 1,014,000	83%
Total Revenue Over (Under) Total Expenditures	$ (311,375)	$ 89,484	$ 400,859		$ -	

Total Fund Revenues are up 8% over the prior fiscal year due to the budgeted increase in HURF fund distributions. Expenditures are down 28% primarily due to the Perkinsville Roundabout payment of $150,000 made in FY 2014-15.

WATER ENTERPRISE FUND						
Water Revenues	$ 508,115	$ 602,494	$ 94,379		$ 5,038,000	
Transfers In	$ 280,700	$ 150,000	$ (130,700)		$ 150,000	
Total Revenues	$ 788,815	$ 752,494	$ (36,321)	-5%	$ 5,188,000	15%
Expenditures						
Water Utility Operations	$ 737,330	$ 473,784	$ (263,546)		$ 484,200	
Debt Service/Reserve	$ 25,879	$ 24,713	$ (1,166)		$ 4,646,000	
Total Expenditures	$ 763,209	$ 498,497	$ (264,712)	-35%	$ 5,130,200	10%
Total Revenue Over (Under) Total Expenditures	$ 25,606	$ 253,997	$ 228,391		$ 57,800	

Total Water Enterprise Fund Revenues are down 5% due to reduced budgeted transfers in from the Capital Improvement Fund. Water Service Fees are up 20% primarily due to an increase in active accounts and usage by the Parks Department. Expenditures are down 35% over last fiscal year.

SEWER ENTERPRISE FUND						
Total Revenue	$ 1,524,865	$ 1,541,461	$ 16,596	1%	$ 2,204,200	70%
Expenditures						
Sewer	$ 872,444	$ 878,008	$ 5,564		$ 751,200	
Debt Service/Reserve	$ 492,139	$ 406,561	$ (85,578)		$ 1,453,000	
Total Expenditures	$ 1,364,583	$ 1,284,569	$ (80,014)	-6%	$ 2,204,200	58%
Total Revenue Over (Under) Total Expenditures	$ 160,282	$ 256,892	$ 96,610		$ -	

Total Sewer Enterprise Fund Revenues are up 1% over last fiscal year. Sewer Buy In fees are down but offset by a 5% increases in Sewer Service Fees. Operating expenses are flat even with the additional personal costs and maintenace and repair expenses bringing the plant up to the Town's standards. Debt Service/Reserve is down due to the debt refinancing completed over the last couple of years.

Town of Chino Valley
Revenue and Expense Summary
For the Twelve Months Ending June 30, 2016 100% of the Fiscal Year

	Actual Year to Date FY 2014-15	Actual Year to Date FY 2015-16	Actual vs Prior Year Amount	Actual vs Prior Year % FY 2015-16/ FY 2014-15	Annual Budget FY 2015-16	% of Budget YTD
CAPITAL IMPROVEMENT FUND						
Total Revenues	$ 1,257,459	$ 1,339,787	$ 82,328	7%	$ 4,060,500	33%
Lease Purchase Proceeds	$ 607,448	$ -	$ (607,448)			
Yavapai Drainage District	$ 150,000	$ 628,263	$ 478,263		$ 529,000	
Road Impact Fees	$ 780,347	$ 20,749				
Capital Improvements	$ 901,768	$ 836,258	$ (65,510)		$ 3,304,000	
Equipment Acquisition	$ 607,448		$ (607,448)			
Transfers	$ 1,185,132	$ 1,137,000	$ (48,132)		$ 1,137,000	
Total Expenditures	$ 2,694,348	$ 1,973,258	$ (721,090)	-27%	$ 4,441,000	44%
Total Revenue Over (Under) Total Expenditures	$ 100,906	$ 15,541	$ 674,233		$ 148,500	

Capital Improvement Fund Tax Revenues are up by 7% over the prior fiscal year primarily due to an increase in Sales Tax activity. Transfers are down due to the decreased amount budgeted this fiscal year. Capital Improvements include the Chino Meadows Unit 5 at Peavine drainage project being constructed this fiscal year.

Town of Chino Valley
Revenue and Expense Summary
For the Twelve Months Ending June 30, 2016 100% of the Fiscal Year

	Actual Year to Date FY 2014-15	Actual Year to Date FY 2015-16	Actual vs Prior Year Amount	Actual vs Prior Year % FY 2015-16/ FY 2014-15	Annual Budget FY 2015-16	% of Budget YTD
OTHER MINOR FUNDS						
Other Minor Funds -Revenues						
CDBG Grant	$ 266,693	$ -	$ (266,693)			
Grants Fund	$ 367,511	$ 281,219	$ (86,292)		$ 3,385,000	
Special Revenue Fund Court	$ 10,024	$ 14,537	$ 4,513		$ 38,500	
Capital Asset Replacement	$ 60,485	$ 53,936	$ (6,549)		$ 10,000	
Police Impact Fee Funds	$ 435	$ 12,433	$ 11,998		$ 63,000	
Library Impact Fee Funds	$ 16,562		$ (16,562)			
Parks/Rec Impact Fee Funds	$ 26	$ 41	$ 15		$ 16,000	
Roads Impact Fee Funds	$ 3,285	$ 1,357	$ (1,928)		$ 529,000	
Special Revenue Fund PD	$ 59,815	$ 61,389	$ 1,574		$ 45,000	
CVSLID Districts	$ 4,028	$ 3,993	$ (35)		$ 4,000	
Total Revenues	**$ 788,864**	**$ 428,905**	**$ (359,959)**	**-46%**	**$ 4,090,500**	**10%**
CDBG Grant	$ 266,693		$ (266,693)			
Grants Funds	$ 293,768	$ 338,151	$ 44,383		$ 3,385,000	
Special Revenue Fund - Court	$ 14,947	$ 39,375	$ 24,428		$ 38,500	
Capital Replacement Fund	$ 6,710	$ 17,735	$ 11,025		$ 10,000	
Police Impact Fee Funds	$ 69,970	$ 25,461	$ (44,509)		$ 63,000	
Library Impact Fee Funds	$ 16,562		$ (16,562)			
Parks/Rec Impact Fee Funds	$ 22,359		$ (22,359)		$ 16,000	
Roads Impact Fee Funds	$ 780,347		$ (780,347)		$ 529,000	
Special Revenue Fund PD	$ 40,425	$ 54,038	$ 13,613		$ 40,000	
CVSLID Districts	$ 3,933	$ 4,178	$ 245		$ 4,000	
Total Expenditures	**$ 1,515,714**	**$ 478,938**	**$ (1,036,776)**	**-68%**	**$ 4,085,500**	**12%**
Total Revenue Over (Under) Total Expenditures	**$ (726,850)**	**$ (50,033)**	**$ 676,817**		**$ 5,000**	
TOTAL ALL FUNDS						
Total Revenue All Funds	$ 12,865,155	$ 13,173,316	$ 308,161	**2%**	$ 24,608,700	**54%**
Total Expenditures All Funds	$ 14,621,259	$ 12,545,815	$ (2,075,444)	**-14%**	$ 24,926,400	**50%**
Total Revenue Over (Under) Total Expenditures All Funds	**$ (1,756,104)**	**$ 627,501**	**$ 2,383,605**		**$ (317,700)**	

(1) Budget does not include Carryover Amounts from Prior Fiscal Years
(2) Year to date amounts include actual expenditures paid to date.

Town of Chino Valley
Major Revenue Summary
For the Twelve Months Ending June 30, 2016 100% of the Fiscal Year

	Actual Year to Date FY 2014-15	Annual Budget FY 2015-16	Actual Year to Date FY 2015-16	% of Budget YTD	Actual vs Prior Year Amount	Actual vs Prior Year %
Town Sales Tax Retail	$ 3,472,857	$ 3,550,000	$ 3,677,641	104%	$ 204,784	6%
Vehicle License Tax	$ 629,553	$ 641,000	$ 680,388	106%	$ 50,835	8%
State Shared Sales Tax	$ 988,552	$ 1,033,000	$ 1,022,547	99%	$ 33,995	3%
State Shared Income Tax	$ 1,309,465	$ 1,302,000	$ 1,305,365	100%	$ (4,100)	0%
Highway User Revenue	$ 841,796	$ 843,000	$ 875,702	104%	$ 33,906	4%
Water Service Fees	$ 381,233	$ 365,000	$ 457,222	125%	$ 75,989	20%
Capital Improvement	$ 1,160,760	$ 1,304,000	$ 1,236,994	95%	$ 76,234	7%
Sewer Service Fees	$ 1,342,019	$ 1,450,000	$ 1,409,585	97%	$ 67,566	5%
Major Revenues Y.T.D.	**$ 10,126,235**	**$ 10,488,000**	**$ 10,665,444**	**102%**	**$ 539,209**	**5%**
Total Revenue All Funds	**$ 12,865,155**	**$ 24,608,700**	**$ 13,173,316**	**54%**	**$ 308,161**	**2%**
	79%	**43%**	**81%**			

The Major Revenues are up $539,209 or 5% over the prior fiscal year in line with the budget projections. Town Sales Tax Retail is up 6% this fiscal year. Water Service Fees are up 20% primarily due to an increase in active accounts and the Parks Department water usage. Total combined revenue for all funds is up 2%.

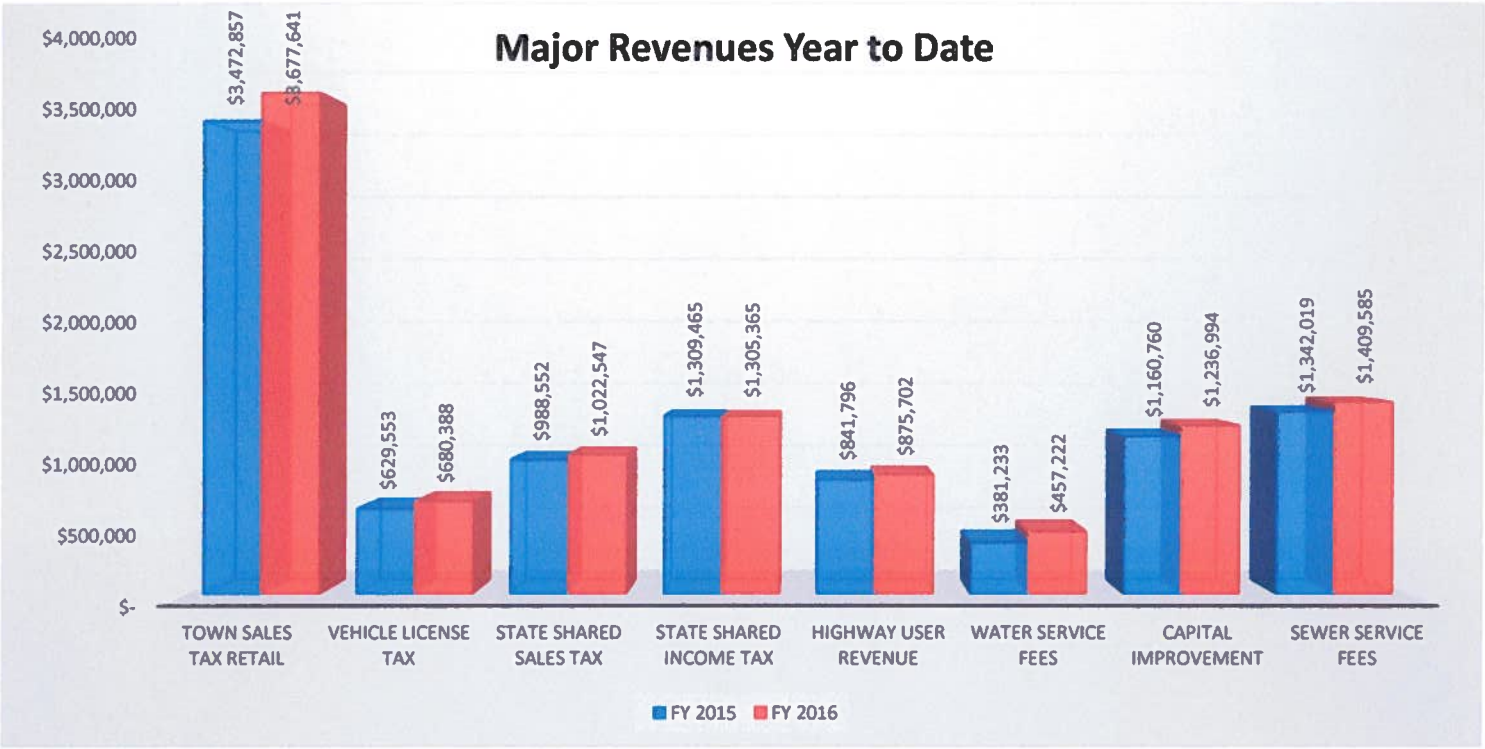

Impact Fee Fund Recaps

For the Twelve Months Ending June 30, 2016 100% of the Fiscal Year

	Police Impact Fees	Library Impact Fees	Parks/Rec Impact Fees	Roads Impact Fees
Beginning Fund Balance @ 6/30/15	$ 13,254	$ -	$ 18,281	$ 575,032
Impact Fees Revenue to Date	$ 12,433	$ -	$ 41	$ 1,358
Impact Fees Expenditures to Date	$ 25,461	$ -	$ -	$ 20,749
Ending Fund Balance to Date	**$ 226**	**$ -**	**$ 18,322**	**$ 555,641**
Budgeted Expenditures FY 15/16	$ 63,000	$ -	$ 16,000	$ 529,000

Contingency Funds Budget

For the Twelve Months Ending June 30, 2016 100% of the Fiscal Year

	Actual Year to Date FY 2015-16	Annual Budget FY 2015-16
General Fund Budget		**$ 380,000**
General Fund Balance		**$ 380,000**
HURF Fund Budget		**$ 42,000**
Water Fund Budget		**$ 31,000**
Sewer Fund Budget		**$ 49,000**
Balance of Contingency Budget	**$ -**	**$ 502,000**

Annual Debt Service Summary By Fund

Fiscal Year Ended June 30, 2016

Debt Issue	Date Issued	Original Amount	Outstanding Amount as of June 30, 2015	FY 2016 Principal	FY 2016 Interest
General Government					
GADA Loan 2007A	7/1/2011	$ 3,825,000	$ 3,385,000	$ 240,000	$ 162,806
US Bank Series 2010	12/15/2010	$ 7,280,000	$ 7,280,000		$ 331,638
		$ 11,105,000	$ 10,665,000	$ 240,000	$ 494,444
Water Enterprise Fund					
US Bank Series 2010	12/15/2010	$ 745,000	$ 565,000	$ 45,000	$ 24,712
Sewer Enterprise Fund					
WIFA	1/10/2007	$ 1,580,000	$ 1,012,403	$ 80,034	$ 27,922
WIFA	1/11/2008	$ 4,853,000	$ 3,496,027	$ 248,952	$ 98,378
WIFA	1/1/2015	$ 2,963,671	$ 2,841,817	$ 124,303	$ 57,121
USDA	2/16/2007	$ 1,595,000	$ 1,374,323	$ 40,329	$ 55,947
USDA	4/10/2008	$ 1,505,000	$ 1,337,955	$ 36,343	$ 54,509
USDA	4/16/2008	$ 1,332,000	$ 1,185,137	$ 32,116	$ 48,284
		$ 13,828,671	$ 11,247,662	$ 562,077	$ 342,161
Total Town of Chino Valley Debt		**$ 25,678,671**	**$ 22,477,662**	**$ 847,077**	**$ 861,317**

TOWN OF CHINO VALLEY
COUNCIL AGENDA ITEM STAFF REPORT

Town Council Regular Meeting **Item No. 7. d.**

Meeting Date: 08/09/2016
Contact Person: Joe Duffy, Finance Director
Phone: 928-636-2646 x-1211
Department: Finance
Item Type: Consent
Estimated length of staff presentation: None
Physical location of item: N/A

AGENDA ITEM TITLE:
Consideration and possible action to approve recommended budget adjustments for the Fiscal Year Ending June 30, 2016. (Joe Duffy, Finance Director)

RECOMMENDED ACTION:
Approve recommended budget adjustments for Fiscal Year Ending June 30, 2016.

SITUATION AND ANALYSIS:
Each fiscal year the Town of Chino Valley officially approves the budget adjustments for any General Fund Departments that are over budget. The Contingency Fund Budget is reduced and each departments budget is increased to cover the budget short fall.

In total the General Fund Departments were under budget by $586,215.

During the Fiscal Year Ended June 30, 2016, the General Fund had 9 departments over budget by a combined total of 139,798.

Due to the fact this figures and tentative and preliminary and my change prior to the audited financials being prepared, the Finance Director is recommending adjusting the budget per the attached schedule by $177,500.

Fiscal Impact

Fiscal Impact?: Yes
If Yes, Budget Code: 01955600
Available: 177,500
Funding Source:
The funds will come out of the contingency line item.

Attachments

Budget Adjustment Worksheet
Budget Adjustment Powerpoint

Town of Chino Valley

Total Expenditure Summary by Department

	Description	2015-16 Adopted Budget	Original 2015-16 Budget Estimate	Actual 2015-16 Pre Audit	Amount (Over)/Under Budget	% (Over)/Under Budget	Contingency Fund Amount
GENERAL FUND							
41	PROSECUTOR	130,600	130,600	128,741	1,859	1%	
42	TOWN CLERK	197,600	183,373	216,159	(18,559)	-9%	20,000
43	TOWN MANAGER	392,500	395,000	397,008	(4,508)	-1%	7,500
44	HUMAN RESOURCES	195,300	195,300	190,746	4,554	2%	
45	MUNICIPAL COURT	261,900	254,788	253,257	8,643	3%	
46	FINANCE	329,200	329,200	333,861	(4,661)	-1%	7,500
47	MGMT INFORMATION	273,600	267,900	229,807	43,793	16%	
50	MAYOR AND COUNCIL	33,000	32,500	26,612	6,388	19%	
55	PLANNING	186,300	190,850	178,992	7,308	4%	
56	BUILDING INSPECTION	277,100	262,700	261,404	15,696	6%	
60	POLICE	2,651,800	2,499,661	2,546,918	104,882	4%	
61	ANIMAL CONTROL	123,300	123,300	114,720	8,580	7%	
63	RECREATION	63,800	70,600	68,232	(4,432)	-7%	7,500
64	LIBRARY	309,600	309,455	311,125	(1,525)	0%	5,000
66	SENIOR CENTER	242,400	241,800	242,981	(581)	0%	5,000
68	PARKS MAINTENANCE	333,200	386,870	397,619	(64,419)	-19%	75,000
69	AQUATICS CENTER	244,900	232,902	210,219	34,681	14%	
71	FACILITIES MAINTENANCE	345,900	354,755	361,997	(16,097)	-5%	20,000
73	FLEET MAINTENANCE	341,000	236,807	220,629	120,371	35%	
74	ENGINEERING	122,000	141,841	147,015	(25,015)	-21%	30,000
95	NON DEPARTMENTAL	996,500	653,858	627,244	369,256	37%	
TOTAL GENERAL FUND		8,051,500	7,494,060	7,465,286	586,214	7%	177,500

Town of Chino Valley

Total Expenditure Summary by Department

	Description	2015-16 Adopted Budget	Original 2015-16 Budget Estimate	Actual 2015-16 Pre Audit	Amount (Over)/Under Budget	% (Over)/Under Budget	Contingency Fund Amount
HIGHWAY USER REVENUE FUND							
278	ROAD MAINTENANCE	1,014,000	905,351	845,267	168,733	17%	
CDBG GRANTS							
390	CDBG PROJECTS	-	-	-	-		
WATER ENTERPRISE FUND							
482	WATER UTILITY OPERATION	5,060,200	446,740	473,784	4,586,416	91%	
495	WATER ENTERPRISE FUND EXPS	70,000	70,000	24,713	45,287	65%	
		5,130,200	516,740	498,497	4,631,703	90%	
CAPITAL IMPROVEMENT FUND							
590	MISC CAPITAL PROJECTS	4,441,000	1,953,845	1,973,258	2,467,742	56%	
SEWER ENTERPRISE FUND							
683	SEWER	1,300,200	874,440	878,008	422,192	32%	
695	CAP/DEBT CONTINGENCIES	904,000	770,112	406,561	497,439	55%	
		2,204,200	1,644,552	1,284,569	919,631	42%	
GRANTS FUND							
7	GRANTS	3,385,000	1,100,000	338,151	3,046,849	90%	

Town of Chino Valley

Total Expenditure Summary by Department

	Description	2015-16 Adopted Budget	Original 2015-16 Budget Estimate	Actual 2015-16 Pre Audit	Amount (Over)/Under Budget	% (Over)/Under Budget	Contingency Fund Amount
SPECIAL REVENUE FUND COURT							
9	SPECIAL REV FUND	38,500	38,500	39,375	(875)	-2%	
CAPITAL ASSET REPLACEMENT							
10	ASSET REPLACEMENT EXPENSES	10,000	23,399	17,735	(7,735)	-77%	
IMPACT FEE FUNDS							
11	TOTAL IMPACT FEES	608,000	47,639	25,461	582,539	96%	
SPECIAL REVENUE FUND PD							
16	VEHICLE IMPOUND EXPEND	40,000	40,000	54,038	(14,038)	-35%	
LIGHTING IMPROVEMENT DISTRICTS							
40	CVSLID	4,000	3,759	4,178	(178)	-4%	
TOTAL EXPENDITURES		24,926,400	13,767,845	12,545,815	12,380,585	50%	

Fiscal Year 2015-2016
Final Budget Adjustments

Finance Department

August 9, 2016

General Fund Budget Summary

Adopted Budget FY 15-16		$8,051,501
Original Estimate @ 6/30/16		$7,494,060
Final Estimate @ 6/30/16		$7,465,286
Total Under Budget		$586,215

12 Departments were under budget
9 Departments were over budget

Department	Original Budget	Final Estimate @ 6/30/16	Amount Over Budget	Information
Town Clerk	$197,600	$216,159	$18,559	Personnel Costs due to retirement in Clerks Office
Town Manager	$392,500	$397,008	$4,508	Health Insurance and Town Hall Flag Pole
Finance Department	$329,200	$333,861	$4,661	Health Insurance and additional Caselle Software Fee
Recreation	$63,800	$68,232	$4,432	Additional Personnel Hours
Library	$309,599	$311,125	$1,526	Health Insurance and State Retirement
Senior Center	$242,400	$242,981	$581	Food Costs

Department	Original Budget	Final Estimate @ 6/30/16	Amount Over Budget	Information
Parks Maintenance	$333,200	$397,619	$64,419	Parks Maintenance Expenses, Water last fall
Facilities Maintenance	$345,900	$361,997	$16,097	Electricity, Telephone and Janitorial Supplies
Engineering	$122,000	$147,015	$25,015	Position Change
Total General Fund			$139,798	

Department	Amount Over Budget	Budget Adjustment
Town Clerk	$18,559	$20,000
Town Manager	$4,508	$7,500
Finance Department	$4,661	$7,500
Recreation	$4,432	$7,500
Library	$1,526	$5,000
Senior Center	$581	$5,000
Parks Maintenance	$64,419	$75,000
Facilities Maintenance	$16,097	$20,000
Engineering	$25,015	$30,000
Total General Fund	$139,798	$177,500

General Fund Contingency Fund FY 2015-2016

Total Contingency Fund Budget		$380,000
Budget Adjustments		$177,500
Contingency Account Balance		$202,500

24AAA5
Single–Stage Air Conditioner
with Puron® Refrigerant
1–1/2 To 5 Tons

Carrier
turn to the experts™

Product Data

Puron

Comfort SERIES

INDUSTRY LEADING FEATURES / BENEFITS

Efficiency

- 14.0 SEER / 11.7 – 12.2 EER (based on tested combination)
- Microtube Technology™ refrigeration system

Reliability

- Puron® refrigerant
- Scroll compressor
- Internal pressure relief valve
- Internal thermal overload
- Filter drier

Durability

WeatherArmor™ protection package:

- Solid, durable sheet metal construction
- Dense wire coil guard

Applications

- Long–line – up to 250 feet (76.20 m) total equivalent length, up to 200 feet (60.96 m) condenser above evaporator, or up to 80 ft. (24.38 m) evaporator above condenser (See Longline Guide for more information.)
- Low ambient (down to –20°F/–28.9°C) with accessory kit

NOTE: Ratings contained in this document are subject to change at any time. Always refer to the AHRI directory (www.ahridirectory.org) for the most up–to–date ratings information.

PRODUCT NUMBER NOMENCLATURE

1	2	3	4	5	6	7	8	9	10	11	12	13
N	N	A	A	A/N	N	N	N	A/N	A/N	A/N	N	N
2	**4**	**A**	**A**	**A**	**5**	**3**	**6**	**A**	**0**	**0**	**3**	0
Product Series		Product Family	Tier	Major Series	SEER	Cooling Capacity		Grille Variations	Open	Open	Voltage	Series
24=AC		A=RES AC	B=Comfort	A=Puron	5=15 SEER			A = Dense W = Standard	0=Not Defined	0=Not Defined	3=208/230–1	0 = Original Series

Use of the AHRI Certified TM Mark indicates a manufacturer's participation in the program For verification of certification for individual products, go to www.ahridirectory.org.

PHYSICAL DATA

UNIT SIZE	18–30	24–30	30–30	36–30	42–30	48–30	60–30
Compressor Type	Scroll						
REFRIGERANT	Puron® (R–410A)						
Control	TXV (Puron Hard Shutoff)						
Charge (lb)	3.20 (1.45)	4.60 (2.09)	5.67 (2.57)	6.40 (2.90)	7.46 (3.38)	8.31 (3.77)	9.39 (4.26)
COND FAN	Propeller Type, Direct Drive						
Air Discharge	Vertical						
Air Qty (CFM)	1700	1881	2614	3365	3700	3545	3700
Motor HP	1/12	1/12	1/10	1/5	1/4	1/4	1/4
Motor RPM	1100	1100	1100	1100	1100	1110	1100
COND COIL							
Face Area (Sq ft)	9.85	11.2	17.24	19.4	15.1	15.1	17.25
Fins per In.	25	25	25	25	20	20	25
Rows	1	1	1	1	2	2	2
Circuits	3	5	4	5	6	6	8
VALVE CONNECT. (In. ID)							
Vapor	3/4	3/4	3/4	7/8	7/8	7/8	7/8
Liquid	3/8						
REFRIGERANT TUBES (In. OD)							
Rated Vapor*	3/4	3/4	3/4	7/8	7/8	7/8	1–1/8
Max Liquid Line	3/8						

* Units are rated with 25 ft (7.6 m) of lineset length. See Vapor Line Sizing and Cooling Capacity Loss table when using other sizes and lengths of lineset.
Note: See unit Installation Instruction for proper installation.

† See *Liquid Line Sizing For Cooling Only Systems with Puron Refrigerant* tables.

REFRIGERANT PIPING LENGTH LIMITATIONS

Liquid Line Sizing and Maximum Total Equivalent Lengths† for Cooling Only Systems with Puron® Refrigerant:

The maximum allowable length of a residential split system depends on the liquid line diameter and vertical separation between indoor and outdoor units.

See Table below for liquid line sizing and maximum lengths :

Maximum Total Equivalent Length
Outdoor Unit BELOW Indoor Unit

Size	Liquid Line Connection	Liquid Line Diam. w/ TXV	AC with Puron Refrigerant Maximum Total Equivalent Length†: Outdoor unit BELOW Indoor Vertical Separation ft (m)								
			0–5 (0–1.5)	6–10 (1.8–3.0)	11–20 (3.4–6.1)	21–30 (6.4–9.1)	31–40 (9.4–12.2)	41–50 (12.5–15.2)	51–60 (15.5–18.3)	61–70 (18.6–21.3)	71–80 (21.6–24.4)
18000 AC with Puron	3/8	1/4	150	150	125	100	100	75	––	––	––
		5/16	250*	250*	250*	250*	250*	250*	250*	225*	150
		3/8	250*	250*	250*	250*	250*	250*	250*	250*	250*
24000 AC with Puron	3/8	1/4	75	75	75	50	50	––	––	––	––
		5/16	250*	250*	250*	250*	250*	225*	175	125	100
		3/8	250*	250*	250*	250*	250*	250*	250*	250*	250*
30000 AC with Puron	3/8	1/4	30	––	––	––	––	––	––	––	––
		5/16	175	225*	200	175	125	100	75	––	––
		3/8	250*	250*	250*	250*	250*	250*	250*	250*	250*
36000 AC with Puron	3/8	5/16	175	150	150	100	100	100	75	––	––
		3//8	250*	250*	250*	250*	250*	250*	250*	250*	250*
42000 AC with Puron	3/8	5/16	125	100	100	75	75	50	––	––	––
		3/8	250*	250*	250*	250*	250*	250*	250*	250*	150
48000 AC with Puron	3/8	3/8	250*	250*	250*	250*	250*	250*	230	160	––
60000 AC with Puron	3/8	3/8	250*	250*	250*	225*	190	150	110	––	––

*** Maximum actual length not to exceed 200 ft (61 m)**

† Total equivalent length accounts for losses due to elbows or fitting. See the Long Line Guideline for details.

–– = outside acceptable range

Maximum Total Equivalent Length
Outdoor Unit ABOVE Indoor Unit

Size	Liquid Line Connection	Liquid Line Diam. w/ TXV	AC with Puron Refrigerant Maximum Total Equivalent Length†: Outdoor unit ABOVE Indoor Vertical Separation ft (m)							
			25 (7.6)	26–50 (7.9–15.2)	51–75 (15.5–22.9)	76–100 (23.2–30.5)	101–125 (30.8–38.1)	126–150 (38.4–45.7)	151–175 (46.0–53.3)	176–200 (53.6–61.0)
18000 AC with Puron	3/8	1/4	175	250*	250*	250*	250*	250*	250*	250*
		5/16	250*	250*	250*	250*	250*	250*	250*	250*
		3/8	250*	250*	250*	250*	250*	250*	250*	250*
24000 AC with Puron	3/8	1/4	100	125	175	200	225*	250*	250*	250*
		5/16	250*	250*	250*	250*	250*	250*	250*	250*
		3/8	250*	250*	250*	250*	250*	250*	250*	250*
30000 AC with Puron	3/8	1/4	30	––	––	––	––	––	––	––
		5/16	250*	250*	250*	250*	250*	250*	250*	250*
		3/8	250*	250*	250*	250*	250*	250*	250*	250*
36000 AC with Puron	3/8	5/16	225*	250*	250*	250*	250*	250*	250*	250*
		3/8	250*	250*	250*	250*	250*	250*	250*	250*
42000 AC with Puron	3/8	5/16	175	200	250*	250*	250*	250*	250*	250*
		3/8	250*	250*	250*	250*	250*	250*	250*	250*
48000 AC with Puron	3/8	3/8	250*	250*	250*	250*	250*	250*	250*	250*
60000 AC with Puron	3/8	3/8	250*	250*	250*	250*	250*	250*	250*	250*

*** Maximum actual length not to exceed 200 ft (61 m)**

† Total equivalent length accounts for losses due to elbows or fitting. See the Long Line Guideline for details.

–– = outside acceptable range

REFRIGERANT CHARGE ADJUSTMENTS

Liquid Line Size	Puron Charge oz/ft
3/8	0.60 (Factory charge for lineset = 9 oz)
5/16	0.40
1/4	0.27

Units are factory charged for 15 ft (4.6 m) of 3/8" liquid line. The factory charge for 3/8" lineset 9 oz. When using other length or diameter liquid lines, charge adjustments are required per the chart above.

Charging Formula:

[(Lineset oz/ft x total length) – (factory charge for lineset)] = charge adjustment

Example 1: System has 15 ft of line set using existing 1/4" liquid line. What charge adjustment is required?

Formula: (.27 oz/ft x 15ft) – (9 oz) = (-4.95) oz.

Net result is to remove 4.95 oz of refrigerant from the system

Example 2: System has 45 ft of existing 5/16" liquid line. What is the charge adjustment?

Formula: (.40 oz/ft. x 45ft) – (9 oz.) = 9 oz.

Net result is to add 9 oz of refrigerant to the system

LONG LINE APPLICATIONS

An application is considered Long Line, when the refrigerant level in the system requires the use of accessories to maintain acceptable refrigerant management for systems reliability. See Accessory Usage Guideline table for required accessories. Defining a system as long line depends on the liquid line diameter, actual length of the tubing, and vertical separation between the indoor and outdoor units.

For Air Conditioner systems, the chart below shows when an application is considered Long Line.

AC WITH PURON® REFRIGERANT LONG LINE DESCRIPTION ft (m)
Beyond these lengths, long line accessories are required

Liquid Line Size	Units On Same Level	Outdoor Below Indoor	Outdoor Above Indoor
1/4	No accessories needed within allowed lengths	No accessories needed within allowed lengths	175 (53.3)
5/16	120 (36.6)	50 (15.2)	120 (36.6)
3/8	80 (24.4)	35 (10.7)	80 (24.4)

Note: See Long Line Guideline for details

VAPOR LINE SIZING AND COOLING CAPACITY LOSS

Acceptable vapor line diameters provide adequate oil return to the compressor while avoiding excessive capacity loss. The suction line diameters shown in the chart below are acceptable for AC systems with Puron refrigerant:

Unit Nominal Size (Btuh)	Maximum Liquid Line Diameters (In. OD)	Vapor Line Diameters (In. OD)	Cooling Capacity Loss (%) Total Equivalent Line Length ft. (m)								
			26–50 (7.9–15.2)	51–80 (15.5–24.4)	81–100 (24.7–30.5)	101–125 (30.8–38.1)	126–150 (38.4–45.7)	151–175 (46.0–53.3)	176–200 (53.6–61.0)	201–225 (61.3–68.6)	226–250 (68.9–76.2)
18000 1 Stage AC with Puron	3/8	1/2	1	2	3	5	6	7	8	9	11
		5/8	0	1	1	1	2	2	2	3	3
		3/4	0	0	0	0	1	1	1	1	1
24000 1 Stage AC with Puron	3/8	5/8	0	1	2	2	3	3	4	5	5
		3/4	0	0	1	1	1	1	1	2	2
		7/8	0	0	0	0	0	1	1	1	1
30000 1 Stage AC with Puron	3/8	5/8	1	2	3	3	4	5	6	7	8
		3/4	0	0	1	1	1	2	2	2	3
		7/8	0	0	0	0	1	1	1	1	1
36000 1 Stage AC with Puron	3/8	5/8	1	2	4	5	6	8	9	10	12
		3/4	0	1	1	2	2	3	3	4	4
		7/8	0	0	0	1	1	1	1	2	2
42000 1 Stage AC with Puron	3/8	3/4	0	1	2	2	3	4	4	5	6
		7/8	0	0	1	1	1	2	2	2	3
		1 1/8	0	0	0	0	0	0	0	0	0
48000 1 Stage AC with Puron	3/8	3/4	0	1	2	3	4	5	5	6	7
		7/8	0	0	1	1	2	2	2	3	3
		1 1/8	0	0	0	0	0	0	0	1	1
60000 1 Stage AC with Puron	3/8	3/4	1	2	4	5	6	7	9	10	11
		7/8	0	1	2	2	3	4	4	5	5
		1 1/8	0	0	0	1	1	1	1	1	1

Applications in this area may be long line and may have height restrictions. See the *Residential Piping and Long Line Guideline*.

ACCESSORY THERMOSTATS

PART NUMBER	PROGRAM	GAS	ELECTRIC	HEAT PUMP	HEAT	COOL
TC–PAC01	5–2 Day	√	√		1	1
TC–NAC01	NP	√	√		1	1
TCSNAC01	NP	√	√		1	1

THERMOSTAT ACCESSORIES		
PART NUMBER	**DESCRIPTION**	**THERMOSTATS USED WITH**
TSTATXXCNV10‡	Thermostat Conversion Kit (4 to 5 wire) – 10 pack	All Carrier® branded thermostats
TX–LBP01	Large Decorative Backplate	TP–Pxx, TP–Nxx, TC–Pxx
TX–MBP01	Medium Decorative Backplate	TC–Nxx, TB–Pxx

ACCESSORIES

Accessory Kit Number	Description	018	024	030	036	042	048	060
HC32GR237	MOTOR,FAN	X						
HC34GE240	MOTOR,FAN			X				
HC39GQ232	MOTOR,FAN							X
HC40GE226	MOTOR,FAN		X		X	X	X	
KAACH1201AAA	CRKC HTR KIT				X	X	X	X
KAACH1401AAA	CRKC HTR KIT	X	X	X				
KAACS0201PTC	KIT PTC	X	X	X	X	X	X	X
KAAFT0101AAA	FREEZE THERM KIT	X	X	X	X	X	X	X
KAAHI0501PUR	HIGH PRESSURE SW KIT	X	X	X	X	X	X	X
KAALP0401PUR	LOW PRESSURE SW KIT	X	X	X	X	X	X	X
KAALS0201LLS	SOL VALVE KIT	X	X	X	X	X	X	X
KAATD0101TDR	TIME DELAY KIT	X	X	X	X	X	X	X
KAAWS0101AAA	WINTER ST KIT	X	X	X	X	X	X	X
KSACY0101AAA	CYCLE PROTR KIT	X	X	X	X	X	X	X
KSAHS1701AAA	HARD START KIT	X	X	X	X	X	X	X
KSALA0301410	LOW AMBIENT KIT	X	X	X	X	X	X	X
KSALA0601AAA	MOTORMASTER KIT	X	X	X	X	X	X	X
KSASF0101AAA	SUPPORT FEET KIT			X	X	X	X	X
KSASF0201AAA	SUPPORT FEET KIT	X	X					
KSASH0601COP	SOUND BLANKET KIT	X	X	X	X		X	
KSASH2101COP	SOUND BLANKET KIT					X		X
KSATX0201PUR	TXV KIT	X		X				
KSATX0301PUR	TXV KIT		X					X
KSATX0401PUR	TXV KIT				X			
KSATX0501PUR	TXV KIT					X	X	
KSBTX0301PUR	TXV KIT		X					
KSBTX0401PUR	TXV KIT				X			

X = Accessory

ACCESSORY USAGE GUIDELINE

ACCESSORY	REQUIRED FOR LOW–AMBIENT COOLING APPLICATIONS (Below 55°F/12.8°C)	REQUIRED FOR LONG LINE APPLICATIONS* (Over 80 ft./24.38 m)	REQUIRED FOR SEA COAST APPLICATIONS (Within 2 miles/3.22 km)
Ball Bearing Fan Motor	Yes	No	No
Compressor Start Assist Capacitor and Relay	Yes	Yes	No
Crankcase Heater	Yes	Yes	No
Evaporator Freeze Thermostat	Yes	No	No
Hard Shut–Off TXV	Yes	Yes	Yes
Liquid Line Solenoid Valve	No	No	No
Motor Master® Control or Low–ambient Pressure Switch	Yes†	No	No
Support Feet	Recommended	No	Recommended
Winter Start Control	Yes	No	No

* For tubing line sets between 80 and 200 ft. (24.38 and 60.96 m) and/or 20 ft. (6.09 m) vertical differential, refer to Residential Split–System Longline Application Guideline.

† Required for Low–Ambient Controller (full modulation feature) MotorMaster® Control.

Accessory Description and Usage (Listed Alphabetically)

1. Ball-Bearing Fan Motor

A fan motor with ball bearings which permits speed reduction while maintaining bearing lubrication.

Usage Guideline:

Required on all units when MotorMaster® is used.

2. Compressor Start Assist - Capacitor and Relay

Start capacitor and relay gives a ”hard” boost to compressor motor at each start up.

Usage Guideline:

Required for reciprocating compressors in the following applications:

- Long line
- Low ambient cooling
- Hard shut off expansion valve on indoor coil
- Liquid line solenoid on indoor coil

Required for single-phase scroll compressors in the following applications:

- Long line
- Low ambient cooling

Suggested for all compressors in areas with a history of low voltage problems.

3. Compressor Start Assist — PTC Type

Solid state electrical device which gives a ”soft” boost to the compressor at each start-up.

Usage Guideline:

Suggested in installations with marginal power supply.

4. Crankcase Heater

An electric resistance heater which mounts to the base of the compressor to keep the lubricant warm during off cycles. Improves compressor lubrication on restart and minimizes the chance of liquid slugging.

Usage Guideline:

Required in low ambient cooling applications.

Required in long line applications.

Suggested in all commercial applications.

5. Cycle Protector

The cycle protector is designed to prevent compressor short cycling. This control provides an approximate 5-minute delay after power to the compressor has been interrupted for any reason, including power outage, protector control trip, thermostat jiggling, or normal cycling.

6. Evaporator Freeze Thermostat

An SPST temperature-actuated switch that stops unit operation when evaporator reaches freeze-up conditions.

Usage Guideline:

Required when low ambient kit has been added.

7. Low-Ambient Pressure Switch Kit

A long life pressure switch which is mounted to outdoor unit service valve. It is designed to cycle the outdoor fan motor in order to maintain head pressure within normal operating limits (approximately 100 psig to 225 psig). The control will maintain working head pressure at low-ambient temperatures down to 0°F (-18°C) when properly installed.

Usage Guideline:

A Low-Ambient Pressure Switch or MotorMaster® Low-Ambient Controller must be used when cooling operation is used at outdoor temperatures below 55°F (12.8°C).

8. MotorMaster® Low-Ambient Controller

A fan-speed control device activated by a temperature sensor, designed to control condenser fan motor speed in response to the saturated, condensing temperature during operation in cooling mode only. For outdoor temperatures down to -20°F (-28.9°C), it maintains condensing temperature at 100°F ±10°F (37.8°C ± 5.5°C).

Usage Guideline:

A MotorMaster® Low Ambient Controller or Low-Ambient Pressure Switch must be used when cooling operation is used at outdoor temperatures below 55°F (12.8°C).

Suggested for all commercial applications.

9. Outdoor Air Temperature Sensor

Designed for use with Carrier Thermostats listed in this publication. This device enables the thermostat to display the outdoor temperature. This device also

is required to enable special thermostat features such as auxiliary heat lock out.

Usage Guideline:

Suggested for all Carrier thermostats listed in this publication.

Accessory Description and Usage (Listed Alphabetically) (Continued)

10. Support Feet

Four stick-on plastic feet that raise the unit 4 in. (101.6 mm) above the mounting pad. This allows sand, dirt, and other debris to be flushed from the unit base, minimizing corrosion.

Usage Guideline:

Suggested in the following applications:

Coastal installations.

Windy areas or where debris is normally circulating.

Rooftop installations.

For improved sound ratings.

11. Thermostatic Expansion Valve (TXV)

A modulating flow-control valve which meters refrigerant liquid flow rate into the evaporator in response to the superheat of the refrigerant gas leaving the evaporator.

Kit includes valve, adapter tubes, and external equalizer tube. Hard shut off types are available.

NOTE: When using a hard shut off TXV with single phase reciprocating compressors, a Compressor Start Assist Capacitor and Relay is required.

Usage Guideline:

Required to achieve AHRI ratings in certain equipment combinations. Refer to combination ratings.

Hard shut off TXV or LLS required in air conditioner long line applications.

Required for use on all zoning systems.

12. Time-Delay Relay

An SPST delay relay which briefly continues operation of indoor blower motor to provide additional cooling after the compressor cycles off.

NOTE: Most indoor unit controls include this feature. For those that do not, use the guideline below.

Usage Guideline:

For improved efficiency ratings for certain combinations of indoor and outdoor units. Refer to AHRI Unitary Directory.

13. Winter Start Control

This control is designed to alleviate nuisance opening of the low-pressure switch by bypassing it for the first 3 minutes of operation.

ELECTRICAL DATA

UNIT SIZE – SERIES	V/PH	OPER VOLTS*		COMPR		FAN	MCA	MAX FUSE† or CKT BRK AMPS
		MAX	MIN	LRA	RLA	FLA		
18–30	208/230/1–60	253	197	47.5	9.0	0.40	11.7	20
24–30				62.9	10.9	0.50	14.1	20
30–30				67.8	12.8	0.75	16.8	25
36–30				79.0	13.6	1.10	18.1	30
42–30				109.0	16.7	1.40	22.3	35
48–30				105.7	15.6	1.40	20.9	35
60–30				127.1	20.8	1.52	27.5	40

* Permissible limits of the voltage range at which the unit will operate satisfactorily

† Time–Delay fuse.

FLA – Full Load Amps
LRA – Locked Rotor Amps
MCA – Minimum Circuit Amps
RLA – Rated Load Amps
NOTE: Control circuit is 24V on all units and requires external power source. Copper wire must be used from service disconnect to unit. All motors/compressors contain internal overload protection.

Complies with 2010 requirements of ASHRAE Standards 90.1

A–WEIGHTED SOUND POWER (dBA)

UNIT SIZE – SERIES	Standard Rating (dBA)	TYPICAL OCTAVE BAND SPECTRUM (dBA without tone adjustment)						
		125	250	500	1000	2000	4000	8000
18–30	75	46.0	55.0	59.5	64.0	60.5	54.5	48.5
24–30	71	50.5	53.5	58.5	60.5	60.0	56.5	52.5
30–30	73	49.5	56.0	62.5	64.0	60.5	57.5	53.5
36–30	75	49.0	57.0	62.5	66.0	61.0	58.5	52.0
42–30	75	52.5	63.0	64.0	63.0	62.0	58.0	52.0
48–30	76	53.0	61.0	64.0	65.5	62.0	59.5	50.5
60–30	75	53.5	57.0	62.5	63.5	61.5	57.5	51.0

NOTE: Tested in compliance with AHRI 270–1995 (not listed with AHRI)

A–WEIGHTED SOUND POWER (dBA) WITH SOUND SHIELD

UNIT SIZE – SERIES	Standard Rating (dBA)	TYPICAL OCTAVE BAND SPECTRUM (dBA without tone adjustment)						
		125	250	500	1000	2000	4000	8000
18–30	75	46.5	55.5	59.5	63.5	60.0	54.0	47.0
24–30	71	47.5	53.5	58.0	59.5	60.0	55.5	49.0
30–30	72	49.0	56.5	61.5	62.5	60.0	57.0	52.0
36–30	73	49.5	57.0	62.0	64.0	60.0	58.0	51.0
42–30	74	53.5	64.0	64.0	62.5	61.0	56.5	50.5
48–30	73	54.5	61.0	63.5	62.5	60.0	56.5	47.5
60–30	73	53.5	59.0	63.0	62.5	59.5	56.0	48.0

NOTE: Tested in compliance with AHRI 270–1995 (not listed with AHRI)

METERING DEVICE

UNIT SIZE – SERIES	INDOOOR	REQUIRED SUBCOOLING °F (°C)
18–30	TXV*	13 (7.22)
24–30		10 (5.56)
30–30		12 (6.67)
36–30		11 (6.11)
42–30		11 (6.11)
48–30		11 (6.11)
60–30		13 (7.22)

* TXV must be ordered separately when indoor coil is not equipped with a TXV. TXV must be hard–shutoff type.

DIMENSIONS - ENGLISH

UNIT	SERIES	ELECTRICAL CHARACTERISTICS				A	B	C	D	E	F	G	K	L	M	N	P	OPERATING WEIGHT (LBS)	SHIPPING WEIGHT (LBS)	SHIPPING DIMENSIONS (L x W x H)
24AAA518	0	X	O	O	O	25 3/4"	25"	3 3/4"	3/4"	4 7/16"	21 1/4"	9 1/8"	2 13/16"	1/2"	13"	15 1/4"	9 3/4"	122	145	27 7/8" X 27 7/8" X 32 9/16"
24AAA524	0	X	O	O	O	25 3/4"	32 5/16"	3 3/4"	3/4"	4 7/16"	21 1/4"	9 1/8"	2 13/16"	1/2"	13 3/8"	13 1/4"	15 1/16"	123	148	27 7/8" X 27 7/8" X 36 5/8"
24AAA530	0	X	O	O	O	31 3/16"	31 13/16"	3 3/4"	3/4"	6 9/16"	24 11/16"	9 1/8"	2 13/16"	1/2"	16 1/8"	15 1/16"	12 5/8"	151	186	33 3/8" X 33 3/8" X 34"
24AAA536	0	X	O	O	O	31 3/16"	35 3/16"	3 7/8"	7/8"	6 9/16"	24 11/16"	9 1/8"	2 15/16"	5/8"	16 1/8"	16 3/8"	14 7/16"	151	171	33 3/8" X 33 3/8" X 37 7/16"
24AAA542	0	X	O	O	O	31 3/16"	28 7/16"	3 7/8"	7/8"	6 9/16"	24 11/16"	9 1/8"	2 15/16"	5/8"	15 7/8"	17"	11 7/8"	191	226	33 3/8" X 33 3/8" X 30 5/8"
24AAA548	0	X	O	O	O	31 3/16"	28 7/16"	3 7/8"	7/8"	6 9/16"	24 11/16"	9 1/8"	2 15/16"	5/8"	16 3/16"	16 1/4"	10 1/4"	182	200	33 3/8" X 33 3/8" X 30 5/8"
24AAA560	0	X	O	O	O	31 3/16"	31 13/16"	3 7/8"	7/8"	6 9/16"	24 11/16"	9 1/8"	2 15/16"	5/8"	15 1/2"	16"	10 7/8"	197	218	33 3/8" X 33 3/8" X 34"
		208-230-1-60	230-1-60	208/230-3-60	460-3-60															

X = YES
O = NO

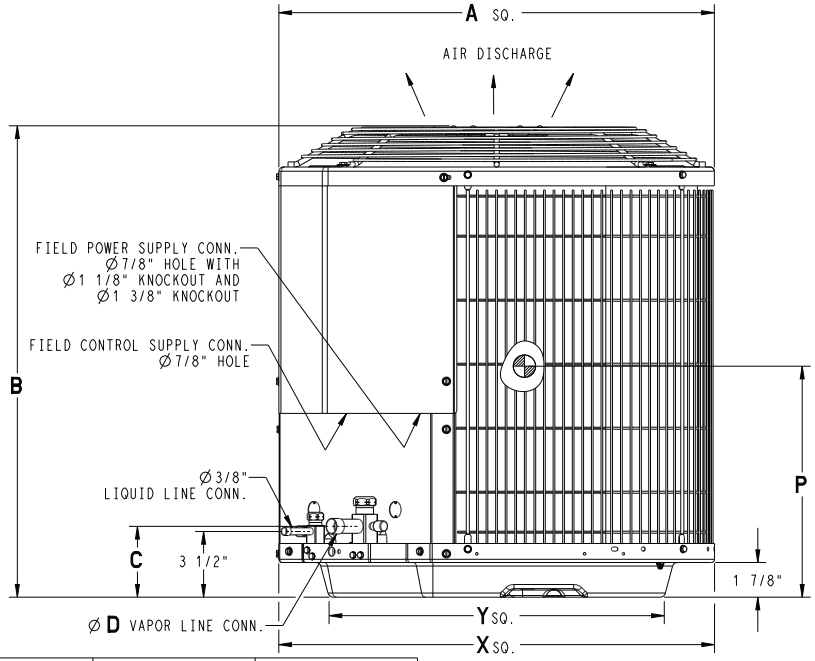

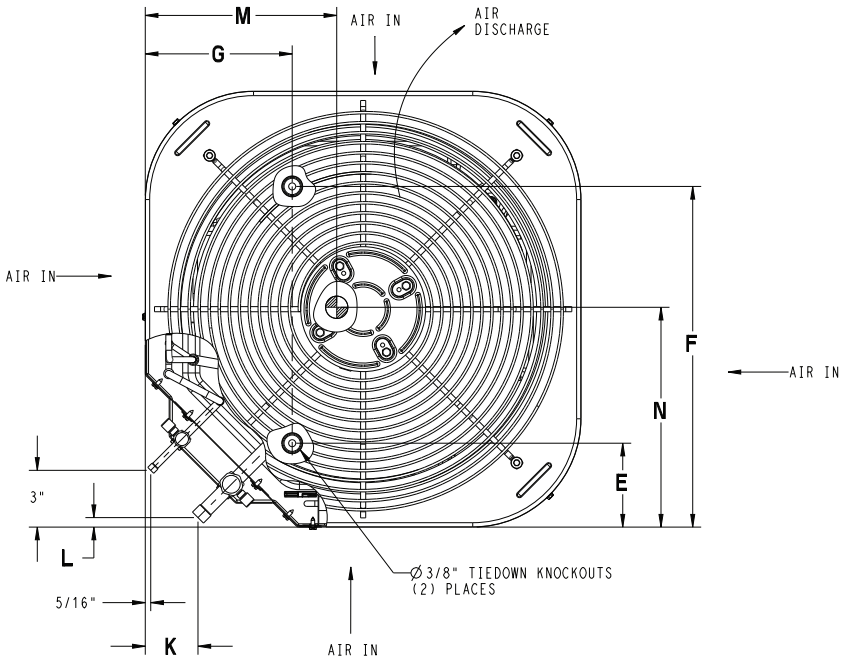

UNIT SIZE	"X" MIN GROUND MOUNTING PAD APPLICATION DIMENSIONS	"Y" MIN ROOF-TOP MOUNTING PAD APPLICATION DIMENSIONS
-	23 1/8"	17 3/4"
18,24	25 3/4"	20 7/16"
30,36,42,48,60	31 3/16"	23"
-	35"	26 3/4"

When installing, allow sufficient space for airflow clearance, wiring, refrigerant piping, and service. Allow 24 in. (609.6 mm) clearance to service end of unit and 48 in. (1219.2 mm) (above unit. For proper airflow, a 6–in. (152.4 mm) clearance on 1 side of unit and 12–in. (304.8 mm) on all remaining sides must be maintained. Maintain a distance of 24 in. (609.6 mm) between units or 18 in. (457.2 mm) if no overhang within 12 ft. (3.66 m) Position so water, snow, or ice from roof or eaves cannot fall directly on unit.

NOTE: 18" (457.2 mm) clearance option described above is approved for outdoor units with wire grille coil guard only. Units with louver panels require 24" (609.6 mm) between units.

On rooftop applications, locate unit at least 6 in. (152.4 mm) above roof surface.

DIMENSIONS - SI

UNIT	SERIES	ELECTRICAL CHARACTERISTICS				A	B	C	D	E	F	G	K	L	M	N	P	OPERATING WEIGHT (Kgs)	SHIPPING WEIGHT (Kgs)	SHIPPING DIMENSIONS (L x W x H)
24AAA518	0	X	O	O	O	654.0	635.0	95.2	19.0	112.7	539.8	231.8	71.4	12.7	330.2	387.4	247.7	55.3	65.8	708.2 X 708.2 X 827.1
24AAA524	0	X	O	O	O	654.0	820.8	95.2	19.0	112.7	539.8	231.8	71.4	12.7	339.7	336.6	382.6	55.8	67.1	708.2 X 708.2 X 930.3
24AAA530	0	X	O	O	O	792.2	808.0	95.2	19.0	166.7	627.1	231.8	71.4	12.7	409.6	382.6	320.7	68.5	84.4	846.6 X 846.6 X 863.6
24AAA536	0	X	O	O	O	792.2	893.8	98.4	22.2	166.7	627.1	231.8	74.6	15.9	409.6	415.9	366.7	68.5	77.6	846.6 X 846.6 X 950.9
24AAA542	0	X	O	O	O	792.2	722.3	98.4	22.2	166.7	627.1	231.8	74.6	15.9	403.2	431.8	301.6	86.6	102.5	846.6 X 846.6 X 777.9
24AAA548	0	X	O	O	O	792.2	722.3	98.4	22.2	166.7	627.1	231.8	74.6	15.9	411.2	412.8	260.4	82.6	90.7	846.6 X 846.6 X 777.9
24AAA560	0	X	O	O	O	792.2	808.0	98.4	22.2	166.7	627.1	231.8	74.6	15.9	393.7	406.4	276.2	89.4	98.9	846.6 X 846.6 X 863.6
		208-230-1-60	230-1-60	208/230-3-60	460-3-60															

X = YES
O = NO

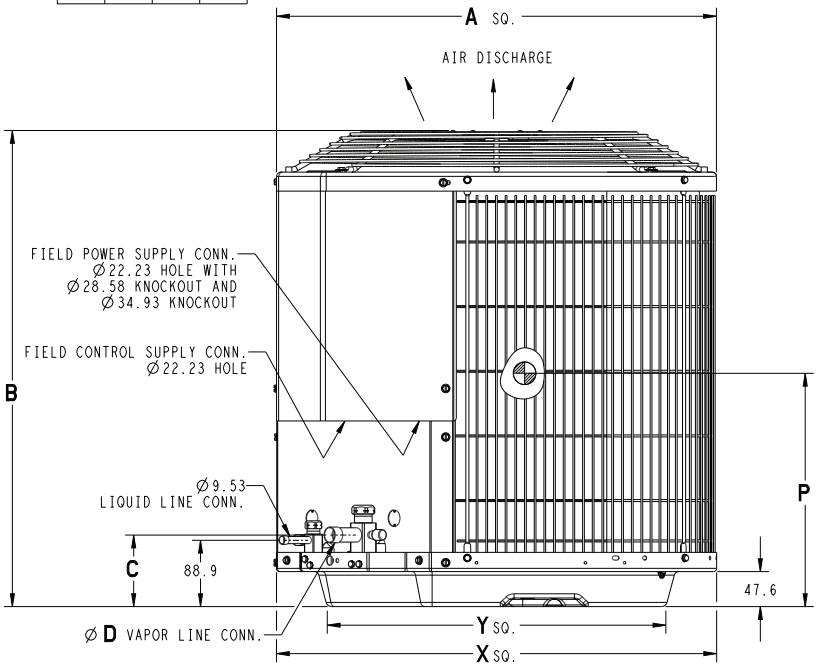

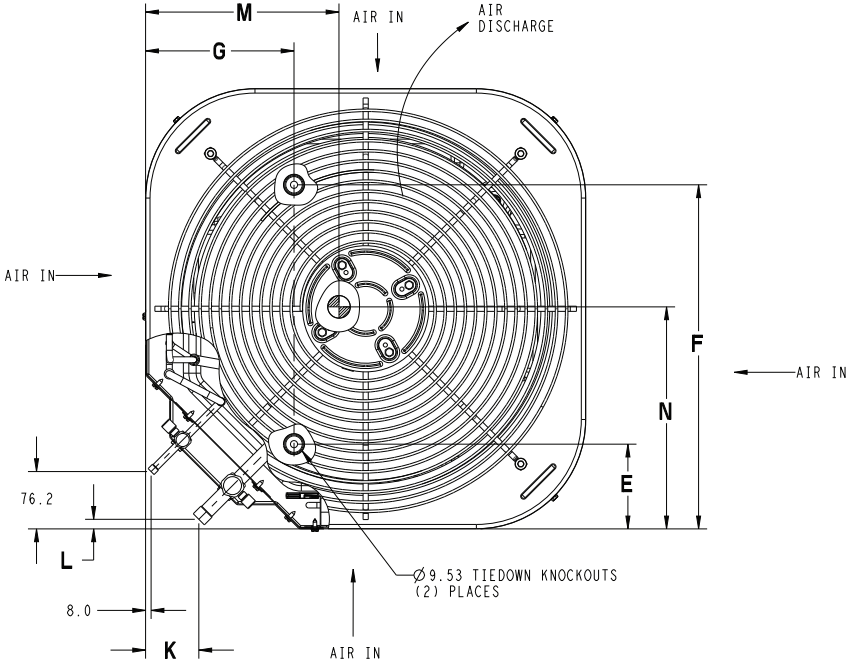

UNIT SIZE	"X" MIN GROUND MOUNTING PAD APPLICATION DIMENSIONS	"Y" MIN ROOF-TOP MOUNTING PAD APPLICATION DIMENSIONS
-	587.4	451.3
18,24	654.0	518.5
30,36,42,48,60	792.2	583.2
-	889.0	679.7

When installing, allow sufficient space for airflow clearance, wiring, refrigerant piping, and service. Allow 24 in. (609.6 mm) clearance to service end of unit and 48 in. (1219.2 mm) (above unit. For proper airflow, a 6–in. (152.4 mm) clearance on 1 side of unit and 12–in. (304.8 mm) on all remaining sides must be maintained. Maintain a distance of 24 in. (609.6 mm) between units or 18 in. (457.2 mm) if no overhang within 12 ft. (3.66 m) Position so water, snow, or ice from roof or eaves cannot fall directly on unit.

NOTE: 18" (457.2 mm) clearance option described above is approved for outdoor units with wire grille coil guard only. Units with louver panels require 24" (609.6 mm) between units.

On rooftop applications, locate unit at least 6 in. (152.4 mm) above roof surface.

CLEARANCES

Clearances (various examples)

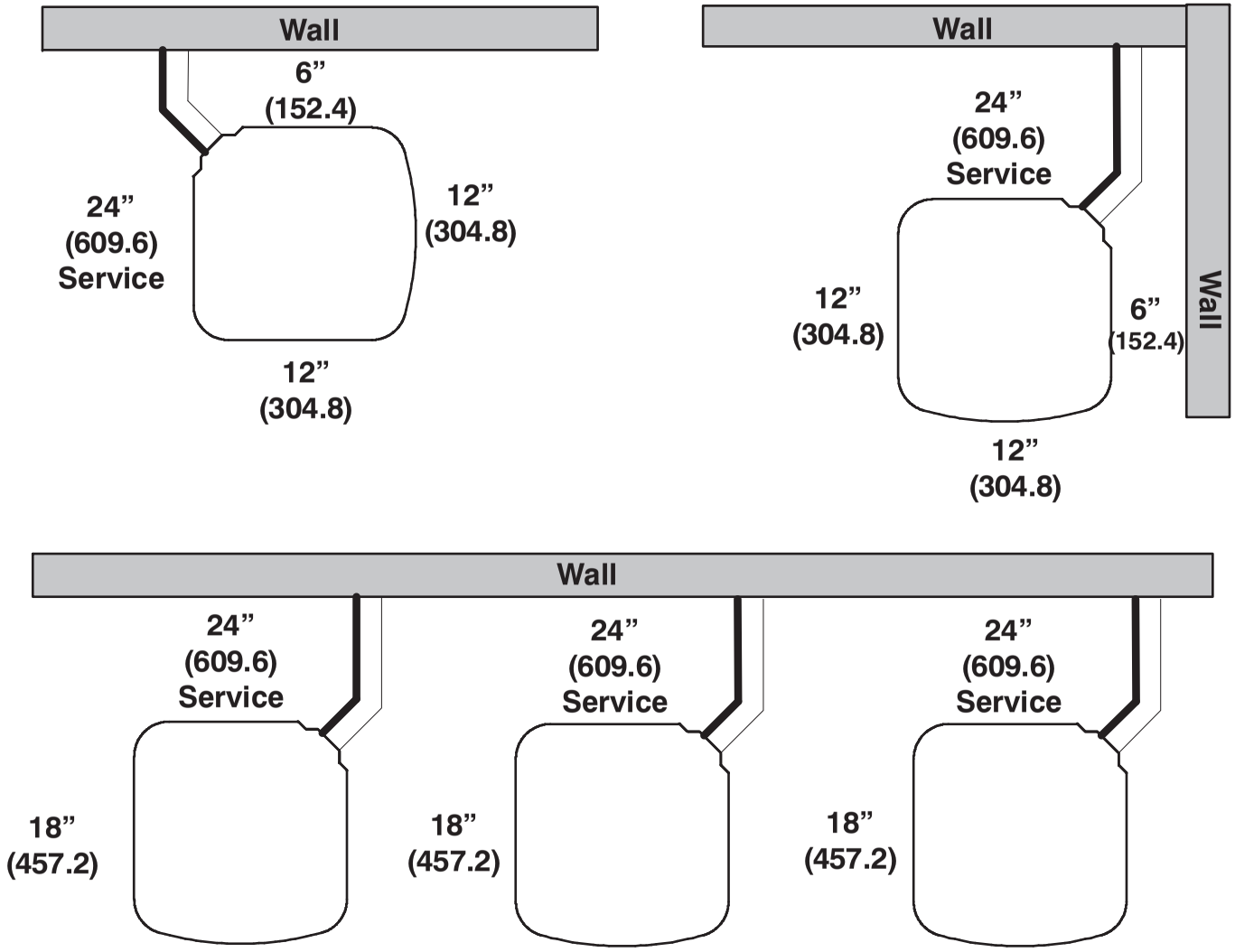

Note: Numbers in ( ) = mm

IMPORTANT: When installing multiple units in an alcove, roof well, or partially enclosed area, ensure there is adequate ventilation to prevent re-circulation of discharge air.

TESTED AHRI COMBINATION RATINGS

NOTE: Ratings contained in this document are subject to change at any time.

For AHRI ratings certificates, please refer to the AHRI directory www.ahridirectory.org

Additional ratings and system combinations can be accessed via the Carrier database at: www.MyCarrierRatings.com

For performance data at specific application &/or design conditions with various indoor unit combinations, the equipment performance calculator can be accessed at : http://rpmob.wrightsoft.com/

UNIT SIZE – SERIES	INDOOR MODEL	AHRI STANDARD RATINGS						FURNACE MODEL
		COOLING						
		CAPACITY	FACTORY ENHANCE	SEER			EER	
				STANDARD	TDR	TXV		
18–30	*CAP**1917AL*	17,200	TXV		14.00		12.20	
24–30	*CAP**2517AL*	24,000	TXV		14.50		12.50	
30–30	*CAP**3721AL*	29,600	TXV		14.50		12.50	
36–30	*CAP**3721AL*	34,600	TXV		14.00		12.20	
42–30	*CAP**4321AL*	40,000	TXV		14.00		12.20	
48–30	*CAP**6124AL*	45,000	TXV		14.50		11.70	
60–30	*CAP**6024AL*	56,500	TXV		14.00		11.70	

AHRI — Air Conditioning, Heating & Refrigeration Institute
EER — Energy Efficiency Ratio – 80°F (26.6°C) indoor db/67°F (19.4°C) indoor wb & 95°F (35°C) outdoor wb.
SEER — Seasonal Energy Efficiency Ratio
TDR — Time–Delay Relay. In most cases, only one method should be used to achieve TDR function. Using more than one method in a system may cause degradation in performance.
Use either the accessory Time–Delay Relay, KAATD0101TDR, or a furnace equipped with TDR. Most Carrier furnaces are equipped with TDR.

NOTES:

1. Ratings are net values reflecting the effects of circulating fan motor heat. Supplemental electric heat is not included.
2. Tested outdoor/indoor combinations have been tested in accordance with DOE test procedures for central air conditioners. Ratings for other combinations are determined under DOE computer simulation procedures.
3. Determine actual CFM values obtainable for your system by referring to fan performance data in fan coil or furnace coil literature.
4. Do not apply with capillary tube coils as performance and reliability are significantly affected.

DETAILED COOLING CAPACITIES#

EVAPORATOR AIR		CONDENSER ENTERING AIR TEMPERATURES °F (°C)																	
		75 (23.9)			85 (29.4)			95 (35)			105 (40.6)			115 (46.1)			125 (51.7)		
CFM	EWB °F (°C)	Capacity MBtuh		Total System KW**	Capacity MBtuh		Total System KW**	Capacity MBtuh		Total System KW**	Capacity MBtuh		Total System KW**	Capacity MBtuh		Total System KW**	Capacity MBtuh		Total System KW**
		Total	Sens‡		Total	Sens‡		Total	Sens‡		Total	Sens‡		Total	Sens‡		Total	Sens‡	
24AAA518–30 Outdoor Section With CAP3017AL* Indoor Section**																			
525	72 (22.2)	20.56	10.96	1.11	19.77	10.67	1.25	18.93	10.35	1.40	17.98	10.00	1.58	16.91	9.62	1.77	15.70	9.18	2.00
	67 (19.4)	18.80	13.55	1.12	18.03	13.23	1.26	17.20	12.89	1.41	16.29	12.52	1.58	15.26	12.11	1.78	14.11	11.66	2.00
	63 (17.2)††	17.52	13.07	1.13	16.75	12.73	1.27	15.94	12.37	1.42	15.04	11.98	1.59	14.05	11.55	1.78	12.94	11.08	2.01
	62 (16.7)	17.21	16.10	1.13	16.46	15.76	1.27	15.67	15.40	1.42	14.89	14.89	1.59	14.11	14.11	1.78	13.23	13.23	2.00
	57 (13.9)	16.82	16.82	1.14	16.21	16.21	1.27	15.57	15.57	1.42	14.86	14.86	1.59	14.08	14.08	1.78	13.20	13.20	2.00
600	72 (22.2)	20.91	11.56	1.14	20.10	11.27	1.27	19.23	10.95	1.43	18.25	10.60	1.60	17.16	10.22	1.80	15.91	9.78	2.02
	67 (19.4)	19.14	14.52	1.15	18.35	14.21	1.28	17.50	13.87	1.44	16.56	13.49	1.61	15.51	13.08	1.80	14.33	12.62	2.03
	63 (17.2)††	17.86	13.98	1.16	17.08	13.64	1.29	16.24	13.28	1.44	15.32	12.88	1.61	14.30	12.45	1.81	13.16	11.97	2.03
	62 (16.7)	17.61	17.44	1.16	16.94	16.94	1.29	16.27	16.27	1.44	15.53	15.53	1.61	14.70	14.70	1.81	13.77	13.77	2.03
	57 (13.9)	17.54	17.54	1.16	16.91	16.91	1.29	16.24	16.24	1.44	15.50	15.50	1.61	14.68	14.68	1.81	13.75	13.75	2.03
675	72 (22.2)	21.16	12.15	1.16	20.33	11.86	1.30	19.44	11.54	1.46	18.44	11.19	1.63	17.32	10.80	1.83	16.05	10.37	2.05
	67 (19.4)	19.39	15.48	1.17	18.58	15.16	1.31	17.72	14.81	1.46	16.77	14.44	1.63	15.69	14.03	1.83	14.49	13.56	2.05
	63 (17.2)††	18.12	14.87	1.18	17.31	14.52	1.32	16.46	14.16	1.47	15.53	13.77	1.64	14.49	13.33	1.84	13.33	12.84	2.06
	62 (16.7)	18.17	18.17	1.18	17.52	17.52	1.32	16.82	16.82	1.47	16.05	16.05	1.64	15.19	15.19	1.83	14.22	14.22	2.06
	57 (13.9)	18.14	18.14	1.18	17.49	17.49	1.32	16.79	16.79	1.47	16.03	16.03	1.64	15.17	15.17	1.83	14.20	14.20	2.06

EVAPORATOR AIR		CONDENSER ENTERING AIR TEMPERATURES °F (°C)																	
		75 (23.9)			85 (29.4)			95 (35)			105 (40.6)			115 (46.1)			125 (51.7)		
CFM	EWB °F (°C)	Capacity MBtuh		Total System KW**	Capacity MBtuh		Total System KW**	Capacity MBtuh		Total System KW**	Capacity MBtuh		Total System KW**	Capacity MBtuh		Total System KW**	Capacity MBtuh		Total System KW**
		Total	Sens‡		Total	Sens‡		Total	Sens‡		Total	Sens‡		Total	Sens‡		Total	Sens‡	
24AAA524–30 Outdoor Section With CAP2517AL* Indoor Section**																			
700	72 (22.2)	28.74	15.34	1.56	27.56	14.90	1.73	26.33	14.44	1.92	25.00	13.95	2.14	23.56	13.43	2.40	21.93	12.85	2.70
	67 (19.4)	26.25	18.97	1.56	25.16	18.51	1.73	24.00	18.04	1.92	22.78	17.53	2.14	21.42	16.99	2.40	19.90	16.39	2.70
	63 (17.2)††	24.47	18.29	1.56	23.43	17.84	1.73	22.35	17.34	1.92	21.19	16.83	2.14	19.88	16.27	2.40	18.47	15.67	2.71
	62 (16.7)	23.96	22.48	1.56	22.96	22.01	1.73	21.90	21.51	1.92	20.82	20.82	2.14	19.79	19.79	2.40	18.66	18.66	2.70
	57 (13.9)	23.35	23.35	1.56	22.55	22.55	1.73	21.70	21.70	1.92	20.79	20.79	2.14	19.76	19.76	2.40	18.63	18.63	2.70
800	72 (22.2)	29.22	16.18	1.60	28.00	15.74	1.77	26.71	15.27	1.96	25.33	14.78	2.18	23.85	14.26	2.44	22.16	13.67	2.73
	67 (19.4)	26.70	20.31	1.60	25.57	19.85	1.77	24.37	19.37	1.96	23.09	18.86	2.18	21.71	18.31	2.44	20.15	17.70	2.74
	63 (17.2)††	24.93	19.55	1.60	23.86	19.08	1.77	22.73	18.59	1.96	21.52	18.07	2.18	20.17	17.49	2.44	18.72	16.88	2.74
	62 (16.7)	24.49	24.27	1.60	23.54	23.54	1.77	22.63	22.63	1.96	21.65	21.65	2.18	20.56	20.56	2.44	19.34	19.34	2.74
	57 (13.9)	24.36	24.36	1.60	23.50	23.50	1.77	22.60	22.60	1.96	21.62	21.62	2.18	20.53	20.53	2.44	19.32	19.32	2.74
900	72 (22.2)	29.57	17.01	1.63	28.30	16.56	1.80	26.98	16.09	2.00	25.56	15.60	2.22	24.03	15.06	2.47	22.31	14.47	2.77
	67 (19.4)	27.04	21.62	1.63	25.87	21.16	1.80	24.63	20.66	1.99	23.32	20.15	2.22	21.91	19.59	2.47	20.32	18.96	2.77
	63 (17.2)††	25.27	20.77	1.63	24.17	20.29	1.80	23.00	19.80	2.00	21.76	19.27	2.22	20.38	18.68	2.48	18.89	18.04	2.78
	62 (16.7)	25.23	25.23	1.63	24.32	24.32	1.80	23.36	23.36	2.00	22.32	22.32	2.22	21.19	21.19	2.47	19.90	19.90	2.77
	57 (13.9)	25.19	25.19	1.63	24.28	24.28	1.80	23.33	23.33	2.00	22.30	22.30	2.22	21.16	21.16	2.47	19.87	19.87	2.77

See notes on page 16

DETAILED COOLING CAPACITIES# CONTINUED

EVAPORATOR AIR		CONDENSER ENTERING AIR TEMPERATURES °F (°C)																	
		75 (23.9)			85 (29.4)			95 (35)			105 (40.6)			115 (46.1)			125 (51.7)		
CFM	EWB °F (°C)	Capacity MBtuh		Total System KW**	Capacity MBtuh		Total System KW**	Capacity MBtuh		Total System KW**	Capacity MBtuh		Total System KW**	Capacity MBtuh		Total System KW**	Capacity MBtuh		Total System KW**
		Total	Sens‡		Total	Sens‡		Total	Sens‡		Total	Sens‡		Total	Sens‡		Total	Sens‡	
24AAA530–30 Outdoor Section With CAP3721AL* Indoor Section**																			
875	72 (22.2)	34.17	17.94	1.96	32.63	17.38	2.16	31.02	16.79	2.40	29.33	16.18	2.66	27.51	15.54	2.98	25.57	14.86	3.35
	67 (19.4)	31.02	22.10	1.97	29.61	21.53	2.17	28.14	20.94	2.40	26.58	20.31	2.66	24.91	19.66	2.98	23.13	18.96	3.35
	63 (17.2)††	28.77	21.25	1.97	27.46	20.67	2.17	26.08	20.08	2.40	24.62	19.45	2.67	23.07	18.79	2.98	21.39	18.09	3.35
	62 (16.7)	28.19	26.15	1.97	26.92	25.56	2.17	25.60	25.36	2.40	24.34	24.34	2.66	23.11	23.11	2.98	21.76	21.76	3.35
	57 (13.9)	27.51	27.51	1.97	26.51	26.51	2.17	25.45	25.45	2.40	24.30	24.30	2.66	23.07	23.07	2.98	21.73	21.73	3.35
1000	72 (22.2)	34.79	18.95	2.01	33.19	18.37	2.21	31.51	17.78	2.44	29.73	17.16	2.71	27.85	16.51	3.03	25.85	15.82	3.40
	67 (19.4)	31.61	23.69	2.01	30.13	23.11	2.21	28.60	22.50	2.44	26.98	21.87	2.71	25.25	21.19	3.03	23.42	20.49	3.40
	63 (17.2)††	29.34	22.73	2.02	27.97	22.14	2.22	26.53	21.53	2.45	25.01	20.89	2.71	23.40	20.21	3.03	21.68	19.49	3.40
	62 (16.7)	28.87	28.71	2.01	27.71	27.71	2.22	26.56	26.56	2.45	25.33	25.33	2.71	24.00	24.00	3.03	22.57	22.57	3.40
	57 (13.9)	28.75	28.75	2.01	27.66	27.66	2.22	26.52	26.52	2.45	25.29	25.29	2.71	23.97	23.97	3.03	22.54	22.54	3.40
1125	72 (22.2)	35.24	19.93	2.06	33.57	19.35	2.26	31.84	18.74	2.49	30.02	18.11	2.76	28.08	17.45	3.08	26.02	16.75	3.45
	67 (19.4)	32.05	25.24	2.06	30.53	24.64	2.26	28.94	24.02	2.49	27.27	23.37	2.76	25.51	22.69	3.08	23.63	21.95	3.45
	63 (17.2)††	29.77	24.16	2.06	28.34	23.56	2.26	26.86	22.94	2.49	25.30	22.28	2.76	23.65	21.59	3.08	21.90	20.83	3.45
	62 (16.7)	29.83	29.83	2.06	28.67	28.67	2.26	27.45	27.45	2.49	26.15	26.15	2.76	24.74	24.74	3.07	23.23	23.23	3.45
	57 (13.9)	29.79	29.79	2.06	28.63	28.63	2.26	27.41	27.41	2.49	26.11	26.11	2.76	24.71	24.71	3.07	23.20	23.20	3.45

EVAPORATOR AIR		CONDENSER ENTERING AIR TEMPERATURES °F (°C)																	
		75 (23.9)			85 (29.4)			95 (35)			105 (40.6)			115 (46.1)			125 (51.7)		
CFM	EWB °F (°C)	Capacity MBtuh		Total System KW**	Capacity MBtuh		Total System KW**	Capacity MBtuh		Total System KW**	Capacity MBtuh		Total System KW**	Capacity MBtuh		Total System KW**	Capacity MBtuh		Total System KW**
		Total	Sens‡		Total	Sens‡		Total	Sens‡		Total	Sens‡		Total	Sens‡		Total	Sens‡	
24AAA536–30 Outdoor Section With CAP3721AL* Indoor Section**																			
1050	72 (22.2)	41.37	21.28	2.29	39.61	20.66	2.57	37.34	19.87	2.85	34.80	19.01	3.15	32.22	18.13	3.51	29.74	17.32	3.96
	67 (19.4)	38.24	26.63	2.29	36.68	26.02	2.57	34.60	25.21	2.84	32.26	24.32	3.13	29.89	23.42	3.49	27.60	22.56	3.93
	63 (17.2)††	35.82	25.73	2.30	34.41	25.13	2.57	32.47	24.32	2.84	30.30	23.42	3.12	28.06	22.51	3.48	25.93	21.65	3.92
	62 (16.7)	35.20	31.75	2.31	33.85	31.13	2.57	32.01	31.87	2.83	30.18	30.18	3.12	28.33	28.33	3.48	26.52	26.52	3.92
	57 (13.9)	34.54	34.54	2.31	33.43	33.43	2.58	31.90	31.90	2.83	30.14	30.14	3.12	28.29	28.29	3.48	26.48	26.48	3.92
1200	72 (22.2)	41.83	22.41	2.34	39.99	21.78	2.63	37.64	20.98	2.91	35.04	20.11	3.22	32.39	19.23	3.58	29.84	18.39	4.02
	67 (19.4)	38.76	28.48	2.35	37.13	27.85	2.62	34.98	27.03	2.90	32.57	26.13	3.19	30.13	25.21	3.55	27.79	24.32	3.99
	63 (17.2)††	36.39	27.47	2.36	34.91	26.85	2.63	32.90	26.03	2.89	30.64	25.11	3.18	28.35	24.18	3.54	26.16	23.28	3.98
	62 (16.7)	35.97	35.97	2.36	34.75	34.75	2.63	33.08	33.08	2.89	31.17	31.17	3.18	29.19	29.19	3.54	27.24	27.24	3.99
	57 (13.9)	35.91	35.91	2.36	34.70	34.70	2.63	33.04	33.04	2.89	31.13	31.13	3.18	29.16	29.16	3.54	27.22	27.22	3.99
1350	72 (22.2)	42.12	23.50	2.40	40.23	22.86	2.69	37.82	22.05	2.97	35.16	21.18	3.28	32.45	20.29	3.64	29.86	19.44	4.09
	67 (19.4)	39.13	30.28	2.40	37.44	29.64	2.68	35.23	28.80	2.96	32.78	27.87	3.25	30.31	26.93	3.61	27.93	25.97	4.06
	63 (17.2)††	36.81	29.15	2.41	35.26	28.52	2.69	33.20	27.67	2.95	30.89	26.73	3.24	28.56	25.77	3.60	26.36	26.11	4.04
	62 (16.7)	37.06	37.06	2.41	35.74	35.74	2.68	33.96	33.96	2.95	31.94	31.94	3.25	29.84	29.84	3.61	27.79	27.79	4.05
	57 (13.9)	37.01	37.01	2.41	35.70	35.70	2.68	33.92	33.92	2.95	31.90	31.90	3.25	29.81	29.81	3.61	27.76	27.76	4.05

See notes on page 16

DETAILED COOLING CAPACITIES# CONTINUED

EVAPORATOR AIR		CONDENSER ENTERING AIR TEMPERATURES °F (°C)																	
		75 (23.9)			85 (29.4)			95 (35)			105 (40.6)			115 (46.1)			125 (51.7)		
CFM	EWB °F (°C)	Capacity MBtuh		Total System KW**	Capacity MBtuh		Total System KW**	Capacity MBtuh		Total System KW**	Capacity MBtuh		Total System KW**	Capacity MBtuh		Total System KW**	Capacity MBtuh		Total System KW**
		Total	Sens‡		Total	Sens‡		Total	Sens‡		Total	Sens‡		Total	Sens‡		Total	Sens‡	
24AAA542–30 Outdoor Section With CAP4321AL* Indoor Section**																			
1200	72 (22.2)	48.28	25.79	2.74	46.16	24.99	3.00	43.98	24.17	3.29	41.66	23.31	3.63	39.16	22.40	4.04	36.41	21.40	4.50
	67 (19.4)	43.89	31.69	2.73	41.97	30.88	2.98	40.00	30.07	3.28	37.90	29.20	3.62	35.60	28.27	4.02	33.08	27.26	4.49
	63 (17.2)††	40.73	30.48	2.72	38.96	29.68	2.98	37.13	28.87	3.27	35.18	28.01	3.61	33.05	27.08	4.01	30.68	26.05	4.48
	62 (16.7)	39.99	37.46	2.72	38.27	36.64	2.97	36.52	35.78	3.27	34.69	34.69	3.61	32.98	32.98	4.01	31.05	31.05	4.48
	57 (13.9)	38.93	38.93	2.71	37.58	37.58	2.97	36.15	36.15	3.27	34.63	34.63	3.61	32.93	32.93	4.01	31.01	31.01	4.48
1400	72 (22.2)	49.27	27.40	2.83	47.02	26.58	3.08	44.73	25.75	3.37	42.31	24.87	3.71	39.69	23.94	4.11	36.83	22.93	4.58
	67 (19.4)	44.84	34.26	2.81	42.81	33.44	3.06	40.73	32.59	3.36	38.54	31.71	3.70	36.15	30.76	4.10	33.53	29.71	4.57
	63 (17.2)††	41.64	32.87	2.80	39.77	32.05	3.05	37.85	31.21	3.35	35.82	30.33	3.69	33.59	29.38	4.09	31.14	28.32	4.56
	62 (16.7)	41.13	40.72	2.80	39.50	39.50	3.05	37.95	37.95	3.35	36.27	36.27	3.69	34.43	34.43	4.10	32.35	32.35	4.56
	57 (13.9)	40.93	40.93	2.80	39.44	39.44	3.05	37.89	37.89	3.35	36.22	36.22	3.69	34.38	34.38	4.10	32.31	32.31	4.56
1575	72 (22.2)	49.87	28.75	2.90	47.56	27.92	3.15	45.18	27.07	3.44	42.68	26.18	3.78	39.99	25.24	4.18	37.06	24.23	4.65
	67 (19.4)	45.42	36.42	2.88	43.33	35.58	3.13	41.19	34.72	3.43	38.93	33.82	3.77	36.49	32.84	4.17	33.83	31.75	4.64
	63 (17.2)††	42.22	34.88	2.87	40.28	34.04	3.12	38.30	33.18	3.42	36.20	32.27	3.76	33.93	31.29	4.16	31.44	30.18	4.63
	62 (16.7)	42.38	42.38	2.87	40.78	40.78	3.13	39.13	39.13	3.42	37.35	37.35	3.77	35.40	35.40	4.17	33.21	33.21	4.64
	57 (13.9)	42.32	42.32	2.87	40.73	40.73	3.13	39.08	39.08	3.42	37.31	37.31	3.77	35.35	35.35	4.17	33.17	33.17	4.64

EVAPORATOR AIR		CONDENSER ENTERING AIR TEMPERATURES °F (°C)																	
		75 (23.9)			85 (29.4)			95 (35)			105 (40.6)			115 (46.1)			125 (51.7)		
CFM	EWB °F (°C)	Capacity MBtuh		Total System KW**	Capacity MBtuh		Total System KW**	Capacity MBtuh		Total System KW**	Capacity MBtuh		Total System KW**	Capacity MBtuh		Total System KW**	Capacity MBtuh		Total System KW**
		Total	Sens‡		Total	Sens‡		Total	Sens‡		Total	Sens‡		Total	Sens‡		Total	Sens‡	
24AAA548–30 Outdoor Section With CAP6124AL* Indoor Section**																			
1400	72 (22.2)	53.91	26.70	3.12	51.70	25.95	3.46	49.29	25.14	3.81	46.61	24.25	4.20	43.50	23.23	4.66	39.94	22.07	5.22
	67 (19.4)	49.07	33.08	3.15	47.03	32.30	3.47	44.83	31.48	3.81	42.36	30.56	4.19	39.52	29.52	4.65	36.26	28.33	5.22
	63 (17.2)††	45.60	31.80	3.16	43.67	31.02	3.48	41.61	30.19	3.81	39.31	29.27	4.18	36.66	28.22	4.64	33.61	27.02	5.22
	62 (16.7)	44.81	39.26	3.16	42.96	38.43	3.48	41.03	40.90	3.80	39.14	39.14	4.18	36.99	36.99	4.64	34.49	34.49	5.22
	57 (13.9)	44.02	44.02	3.16	42.51	42.51	3.48	40.91	40.91	3.80	39.08	39.08	4.18	36.94	36.94	4.64	34.44	34.44	5.22
1600	72 (22.2)	54.74	28.18	3.20	52.46	27.42	3.54	49.97	26.60	3.89	47.17	25.68	4.28	43.95	24.64	4.74	40.30	23.48	5.30
	67 (19.4)	49.91	35.43	3.22	47.78	34.64	3.55	45.50	33.80	3.89	42.95	32.87	4.27	40.01	31.79	4.73	36.67	30.58	5.30
	63 (17.2)††	46.41	33.99	3.23	44.41	33.19	3.55	42.28	32.35	3.89	39.89	31.40	4.26	37.15	30.32	4.72	34.04	29.09	5.30
	62 (16.7)	45.97	45.97	3.23	44.36	44.36	3.55	42.62	42.62	3.89	40.65	40.65	4.27	38.35	38.35	4.73	35.68	35.68	5.30
	57 (13.9)	45.90	45.90	3.23	44.29	44.29	3.55	42.56	42.56	3.89	40.59	40.59	4.27	38.30	38.30	4.73	35.63	35.63	5.30
1800	72 (22.2)	55.35	29.59	3.27	53.00	28.82	3.62	50.43	27.99	3.97	47.55	27.07	4.35	44.26	26.02	4.82	40.51	24.83	5.38
	67 (19.4)	50.51	37.70	3.29	48.34	36.90	3.63	45.99	36.05	3.97	43.37	35.09	4.35	40.38	33.98	4.81	37.00	32.68	5.38
	63 (17.2)††	47.02	36.10	3.31	44.97	35.29	3.63	42.77	34.42	3.97	40.33	33.45	4.34	37.54	32.33	4.81	34.39	30.98	5.38
	62 (16.7)	47.51	47.51	3.31	45.80	45.80	3.63	43.96	43.96	3.97	41.87	41.87	4.35	39.44	39.44	4.81	36.63	36.63	5.38
	57 (13.9)	47.45	47.45	3.31	45.74	45.74	3.63	43.91	43.91	3.97	41.82	41.82	4.35	39.40	39.40	4.81	36.58	36.58	5.38

See notes on page 16

DETAILED COOLING CAPACITIES# CONTINUED

EVAPORATOR AIR		CONDENSER ENTERING AIR TEMPERATURES °F (°C)																	
		75 (23.9)			85 (29.4)			95 (35)			105 (40.6)			115 (46.1)			125 (51.7)		
CFM	EWB °F (°C)	Capacity MBtuh		Total System KW**	Capacity MBtuh		Total System KW**	Capacity MBtuh		Total System KW**	Capacity MBtuh		Total System KW**	Capacity MBtuh		Total System KW**	Capacity MBtuh		Total System KW**
24AAA560–30 Outdoor Section With CAP**6024AL* Indoor Section																			
1750	72 (22.2)	68.41	35.82	4.01	65.35	34.67	4.39	62.15	33.49	4.86	58.70	32.23	5.39	55.01	30.89	5.96	50.87	29.41	6.55
	67 (19.4)	62.24	44.04	4.01	59.41	42.88	4.38	56.50	41.69	4.83	53.38	40.43	5.35	50.00	39.08	5.91	46.23	37.59	6.49
	63 (17.2)††	57.78	42.37	4.02	55.13	41.19	4.37	52.41	39.99	4.81	49.54	38.75	5.32	46.39	37.40	5.87	42.89	35.91	6.45
	62 (16.7)	56.92	52.17	4.02	54.40	50.96	4.37	51.84	49.69	4.81	49.16	49.16	5.32	46.64	46.64	5.88	43.73	43.73	6.46
	57 (13.9)	55.64	55.64	4.02	53.56	53.56	4.37	51.43	51.43	4.81	49.13	49.13	5.32	46.56	46.56	5.88	43.68	43.68	6.46
2000	72 (22.2)	69.54	37.55	4.10	66.36	36.39	4.49	63.04	35.18	4.96	59.50	33.91	5.49	55.63	32.53	6.06	51.36	31.03	6.66
	67 (19.4)	63.30	46.83	4.11	60.35	45.64	4.47	57.34	44.44	4.93	54.11	43.16	5.45	50.61	41.77	6.01	46.74	40.24	6.60
	63 (17.2)††	58.79	44.95	4.11	56.04	43.76	4.47	53.23	42.55	4.91	50.24	41.27	5.42	47.00	39.89	5.98	43.39	38.33	6.56
	62 (16.7)	58.25	55.83	4.11	55.72	55.33	4.47	53.37	53.37	4.91	50.91	50.91	5.43	48.16	48.16	5.99	45.09	45.09	6.58
	57 (13.9)	57.80	57.80	4.11	55.59	55.59	4.47	53.30	53.30	4.91	50.84	50.84	5.43	48.11	48.11	5.99	45.03	45.03	6.58
2250	72 (22.2)	70.37	39.17	4.20	67.10	37.99	4.59	63.67	36.77	5.06	60.02	35.48	5.59	56.04	34.08	6.17	51.66	32.55	6.76
	67 (19.4)	64.08	49.47	4.20	61.08	48.28	4.57	57.95	47.04	5.03	54.64	45.73	5.55	51.07	44.31	6.12	47.12	42.69	6.70
	63 (17.2)††	59.56	47.41	4.20	56.73	46.20	4.56	53.82	44.95	5.01	50.77	43.65	5.52	47.44	42.21	6.08	43.78	40.57	6.66
	62 (16.7)	59.69	59.69	4.20	57.32	57.32	4.56	54.90	54.90	5.02	52.28	52.28	5.53	49.41	49.41	6.10	46.17	46.17	6.69
	57 (13.9)	59.58	59.58	4.20	57.25	57.25	4.56	54.83	54.83	5.02	52.23	52.23	5.53	49.35	49.35	6.10	46.12	46.12	6.69

† Total and sensible capacities are net capacities. Blower motor heat has been subtracted.
‡ Sensible capacities shown are based on 80°F (27°C) entering air at the indoor coil. For sensible capacities at other than 80°F (27°C), deduct 835 Btuh (245 kW) per 1000 CFM (480 L/S) of indoor coil air for each degree below 80°F (27°C), or add 835 Btuh (245 kW) per 1000 CFM (480 L/S) of indoor coil air per degree above 80°F (27°C).
# Detailed cooling capacities are based on indoor and outdoor unit at the same elevation per AHRI standard 210/240–2008. If additional tubing length and/or indoor unit is located above outdoor unit, a slight variation in capacity may occur.
** System kw is total of indoor and outdoor unit kilowatts.
†† At TVA rating indoor condition (75°F edb/63°F ewb). All other indoor air temperatures are at 80°F edb.
NOTE: When the required data falls between the published data, interpolation may be performed. Extrapolation is not an acceptable practice.
EWB — Entering Wet Bulb

CONDENSER ONLY RATINGS

SST °F (°C)		CONDENSER ENTERING AIR TEMPERATURES °F (°C)							
		55 (12.78)	65 (18.33)	75 (23.89)	85 (29.44)	95 (35.0)	105 (40.56)	115 (46.11)	125 (51.67)
24AAA518–30									
30 (–1.11)	TCG	16.10	14.90	13.90	12.90	11.90	11.00	9.90	8.80
	SDT	67.70	77.00	86.40	95.80	105.30	114.80	124.20	133.50
	KW	0.74	0.85	0.96	1.08	1.22	1.37	1.55	1.75
35 (1.67)	TCG	17.60	16.50	15.40	14.30	13.30	12.30	11.10	10.00
	SDT	68.80	78.10	87.40	96.90	106.30	115.60	125.00	134.30
	KW	0.74	0.84	0.96	1.08	1.22	1.38	1.55	1.76
40 (4.44)	TCG	19.30	18.10	17.00	15.90	14.80	13.60	12.40	11.20
	SDT	69.90	79.20	88.50	97.90	107.20	116.50	125.80	135.10
	KW	0.73	0.84	0.95	1.08	1.22	1.38	1.56	1.76
45 (7.22)	TCG	21.10	19.80	18.60	17.50	16.30	15.10	13.80	12.40
	SDT	71.10	80.40	89.60	98.90	108.20	117.50	126.70	135.90
	KW	0.72	0.83	0.95	1.08	1.22	1.38	1.56	1.77
50 (10.0)	TCG	22.90	21.60	20.40	19.20	17.90	16.60	15.20	13.80
	SDT	72.30	81.50	90.70	100.00	109.30	118.50	127.70	136.80
	KW	0.71	0.82	0.94	1.07	1.22	1.38	1.56	1.77
55 (12.78)	TCG	24.90	23.50	22.20	20.90	19.60	18.20	16.70	15.20
	SDT	73.50	82.70	91.90	101.20	110.40	119.60	128.70	137.80
	KW	0.70	0.81	0.93	1.07	1.21	1.38	1.56	1.77
24AAA524–30									
30 (–1.11)	TCG	21.10	19.90	18.80	17.60	16.50	15.30	14.10	12.90
	SDT	69.10	78.50	87.90	97.50	106.90	116.40	125.80	135.10
	KW	1.00	1.15	1.30	1.47	1.65	1.87	2.11	2.40
35 (1.67)	TCG	23.20	21.90	20.70	19.40	18.20	16.90	15.60	14.20
	SDT	70.30	79.70	89.20	98.60	108.00	117.30	126.60	135.90
	KW	1.01	1.15	1.30	1.47	1.66	1.87	2.11	2.40
40 (4.44)	TCG	25.50	24.10	22.70	21.40	20.00	18.60	17.20	15.70
	SDT	71.60	81.00	90.40	99.70	109.00	118.30	127.60	136.80
	KW	1.01	1.15	1.31	1.47	1.66	1.87	2.12	2.40
45 (7.22)	TCG	27.90	26.40	24.90	23.50	22.00	20.40	18.80	17.20
	SDT	73.10	82.40	91.60	100.90	110.10	119.30	128.50	137.70
	KW	1.01	1.16	1.31	1.48	1.66	1.87	2.12	2.41
50 (10.0)	TCG	30.50	28.90	27.30	25.70	24.00	22.30	20.60	18.80
	SDT	74.50	83.70	92.90	102.10	111.30	120.50	129.60	138.70
	KW	1.02	1.16	1.31	1.48	1.66	1.88	2.12	2.41
55 (12.78)	TCG	33.20	31.50	29.70	28.00	26.20	24.30	22.40	20.50
	SDT	76.00	85.20	94.30	103.50	112.60	121.70	130.70	139.70
	KW	1.02	1.16	1.31	1.48	1.67	1.88	2.12	2.41
24AAA530–30									
30 (–1.11)	TCG	24.90	23.60	22.30	21.00	19.60	18.30	16.80	15.20
	SDT	68.80	78.20	87.70	97.20	106.60	116.00	125.40	134.80
	KW	1.22	1.39	1.56	1.74	1.95	2.19	2.47	2.80
35 (1.67)	TCG	27.40	26.00	24.60	23.20	21.70	20.20	18.60	16.90
	SDT	70.00	79.40	88.80	98.10	107.50	116.90	126.20	135.50
	KW	1.23	1.39	1.56	1.75	1.96	2.20	2.48	2.81
40 (4.44)	TCG	30.10	28.60	27.00	25.50	23.90	22.20	20.50	18.70
	SDT	71.30	80.60	89.90	99.20	108.50	117.80	127.10	136.40
	KW	1.24	1.40	1.57	1.76	1.97	2.21	2.49	2.82
45 (7.22)	TCG	33.10	31.40	29.70	28.00	26.30	24.50	22.60	20.60
	SDT	72.70	81.90	91.10	100.40	109.60	118.90	128.10	137.30
	KW	1.24	1.40	1.57	1.76	1.97	2.22	2.50	2.83
50 (10.0)	TCG	36.20	34.40	32.50	30.70	28.80	26.80	24.80	22.60
	SDT	74.20	83.20	92.40	101.60	110.80	120.00	129.10	138.20
	KW	1.25	1.41	1.58	1.77	1.98	2.22	2.51	2.84
55 (12.78)	TCG	39.60	37.60	35.60	33.50	31.50	29.30	27.10	24.80
	SDT	75.70	84.70	93.80	102.90	112.00	121.10	130.20	139.20
	KW	1.25	1.41	1.58	1.77	1.98	2.23	2.52	2.85
24AAA536–30									
30 (–1.11)	TCG	25.60	27.80	27.80	26.60	24.80	22.60	20.40	18.40
	SDT	65.40	76.40	86.60	96.30	105.70	115.00	124.20	133.60
	KW	1.30	1.70	2.00	2.25	2.49	2.76	3.08	3.51
35 (1.67)	TCG	29.30	31.10	30.90	29.50	27.50	25.20	22.90	20.70
	SDT	66.70	77.60	87.70	97.20	106.50	115.80	125.00	134.30
	KW	1.28	1.68	1.98	2.23	2.47	2.74	3.08	3.50
40 (4.44)	TCG	33.10	34.60	34.10	32.50	30.30	27.80	25.30	23.00
	SDT	68.10	78.80	88.70	98.10	107.40	116.60	125.80	135.10
	KW	1.26	1.66	1.96	2.21	2.46	2.74	3.07	3.49
45 (7.22)	TCG	37.00	38.00	37.30	35.50	33.10	30.50	27.80	25.30
	SDT	69.40	79.90	89.70	99.10	108.30	117.40	126.60	135.80
	KW	1.24	1.64	1.94	2.20	2.45	2.73	3.07	3.50
50 (10.0)	TCG	40.70	41.40	40.40	38.40	35.90	33.00	30.20	27.50
	SDT	70.70	81.00	90.70	100.00	109.10	118.20	127.30	136.50
	KW	1.22	1.62	1.93	2.19	2.45	2.74	3.08	3.50
55 (12.78)	TCG	44.40	44.70	43.50	41.30	38.50	35.50	32.50	29.60
	SDT	71.80	82.00	91.60	100.80	110.00	119.00	128.00	137.10
	KW	1.20	1.61	1.92	2.19	2.46	2.75	3.09	3.52

See notes on page 18

CONDENSER ONLY RATINGS CONTINUED

SST °F (°C)		CONDENSER ENTERING AIR TEMPERATURES °F (°C)							
		55 (12.78)	65 (18.33)	75 (23.89)	85 (29.44)	95 (35.0)	105 (40.56)	115 (46.11)	125 (51.67)
24AAA542–30									
30 (–1.11)	TCG	36.30	34.30	32.50	30.70	28.90	27.00	24.90	22.50
	SDT	67.70	77.20	86.70	96.20	105.80	115.20	124.60	134.00
	KW	1.77	1.99	2.23	2.50	2.79	3.13	3.53	3.99
35 (1.67)	TCG	40.00	37.80	35.80	33.90	31.90	29.80	27.50	25.00
	SDT	69.00	78.30	87.80	97.20	106.70	116.10	125.40	134.80
	KW	1.79	2.01	2.25	2.51	2.80	3.15	3.54	4.01
40 (4.44)	TCG	44.00	41.60	39.40	37.20	35.10	32.80	30.40	27.70
	SDT	70.30	79.60	88.90	98.30	107.60	117.00	126.30	135.60
	KW	1.81	2.03	2.26	2.52	2.82	3.16	3.56	4.03
45 (7.22)	TCG	48.30	45.60	43.20	40.90	38.50	36.10	33.50	30.60
	SDT	71.60	80.80	90.00	99.40	108.70	118.00	127.30	136.60
	KW	1.84	2.05	2.27	2.53	2.83	3.17	3.58	4.05
50 (10.0)	TCG	52.80	50.00	47.30	44.80	42.20	39.60	36.70	33.70
	SDT	73.00	82.10	91.30	100.60	109.80	119.10	128.40	137.50
	KW	1.86	2.07	2.29	2.55	2.84	3.19	3.60	4.07
55 (12.78)	TCG	57.70	54.60	51.70	49.00	46.20	43.30	40.30	37.00
	SDT	74.60	83.60	92.70	101.90	111.10	120.30	129.50	138.60
	KW	1.89	2.09	2.31	2.56	2.86	3.21	3.62	4.09
24AAA548–30									
30 (–1.11)	TCG	40.80	38.00	35.60	33.50	31.40	29.10	26.60	23.70
	SDT	69.00	78.10	87.30	96.60	106.00	115.30	124.50	133.70
	KW	2.01	2.38	2.69	2.97	3.28	3.65	4.13	4.75
35 (1.67)	TCG	44.70	41.80	39.30	37.10	34.80	32.30	29.50	26.40
	SDT	70.30	79.30	88.50	97.70	107.00	116.30	125.40	134.60
	KW	1.99	2.37	2.69	2.99	3.30	3.67	4.14	4.75
40 (4.44)	TCG	48.90	45.90	43.30	40.90	38.40	35.70	32.60	29.20
	SDT	71.70	80.60	89.80	99.00	108.20	117.30	126.50	135.50
	KW	1.97	2.36	2.69	3.00	3.32	3.69	4.16	4.76
45 (7.22)	TCG	53.30	50.30	47.60	45.00	42.20	39.30	35.90	32.20
	SDT	73.10	82.10	91.10	100.30	109.40	118.50	127.50	136.40
	KW	1.94	2.35	2.69	3.01	3.34	3.71	4.18	4.76
50 (10.0)	TCG	58.10	55.00	52.10	49.30	46.30	43.10	39.40	35.30
	SDT	74.70	83.60	92.60	101.70	110.70	119.70	128.60	137.40
	KW	1.90	2.32	2.68	3.01	3.35	3.73	4.19	4.77
55 (12.78)	TCG	63.30	60.00	57.00	53.90	50.60	47.00	43.00	38.60
	SDT	76.40	85.20	94.20	103.20	112.20	121.00	129.80	138.40
	KW	1.86	2.30	2.67	3.01	3.36	3.74	4.20	4.77
24AAA560–30									
30 (–1.11)	TCG	53.80	50.20	47.00	44.00	41.20	38.30	35.20	31.80
	SDT	71.80	80.60	89.70	98.90	108.10	117.40	126.50	135.60
	KW	3.08	3.18	3.40	3.73	4.14	4.62	5.14	5.69
35 (1.67)	TCG	59.10	55.20	51.70	48.60	45.50	42.30	38.80	35.10
	SDT	73.20	82.00	91.00	100.10	109.30	118.50	127.60	136.60
	KW	3.06	3.17	3.40	3.73	4.15	4.63	5.16	5.71
40 (4.44)	TCG	64.70	60.60	56.90	53.50	50.00	46.50	42.80	38.70
	SDT	74.70	83.40	92.40	101.40	110.60	119.70	128.70	137.60
	KW	3.03	3.16	3.39	3.73	4.16	4.65	5.18	5.74
45 (7.22)	TCG	70.70	66.40	62.40	58.70	54.90	51.10	46.90	42.50
	SDT	76.30	85.00	93.90	102.90	112.00	121.00	129.90	138.70
	KW	3.01	3.14	3.39	3.74	4.17	4.67	5.21	5.77
50 (10.0)	TCG	77.20	72.60	68.40	64.30	60.20	55.90	51.40	46.60
	SDT	78.20	86.80	95.60	104.50	113.50	122.40	131.20	139.80
	KW	2.97	3.12	3.38	3.75	4.20	4.70	5.25	5.81
55 (12.78)	TCG	84.20	79.30	74.70	70.30	65.80	61.10	56.10	50.80
	SDT	80.20	88.80	97.50	106.30	115.10	123.90	132.50	141.00
	KW	2.93	3.10	3.39	3.76	4.22	4.74	5.29	5.86

* AHRI listing applies only to systems shown in Combination Ratings table.

KW – Outdoor Unit Kilowatts Only.

SDT – Saturated Temperature Leaving Compressor (°F)

SST – Saturated Temperature Entering Compressor (°F/°C)

TCG – Gross Cooling Capacity (1000 Btuh)

GUIDE SPECIFICATIONS
GENERAL

System Description

Outdoor-mounted, air-cooled, split-system air conditioner unit suitable for ground or rooftop installation. Unit consists of a hermetic compressor, an air-cooled coil, propeller-type condenser fan, and a control box. Unit will discharge supply air upward as shown on contract drawings. Unit will be used in a refrigeration circuit to match up to a packaged fan coil or coil unit.

Quality Assurance

— Unit will be rated in accordance with the latest edition of AHRI Standard 210.

— Unit will be certified for capacity and efficiency, and listed in the latest AHRI directory.

— Unit construction will comply with latest edition of ANSI/ ASHRAE and with NEC.

— Unit will be constructed in accordance with UL standards and will carry the UL label of approval. Unit will have c-UL-us approval.

— Unit cabinet will be capable of withstanding Federal Test Method Standard No. 141 (Method 6061) 500-hr salt spray test.

— Air-cooled condenser coils will be leak tested at 150 psig and pressure tested at 450 psig.

— Unit constructed in ISO9001 approved facility.

Delivery, Storage, and Handling

— Unit will be shipped as single package only and is stored and handled per unit manufacturer's recommendations.

Warranty (for inclusion by specifying engineer)

— U.S. and Canada only.

PRODUCTS

Equipment

Factory assembled, single piece, air-cooled air conditioner unit. Contained within the unit enclosure is all factory wiring, piping, controls, compressor, refrigerant charge Puron® (R-410A), and special features required prior to field start-up.

Unit Cabinet

— Unit cabinet will be constructed of galvanized steel, bonderized, and coated with a powder coat paint.

— 3 phase equipment available with dense grille only.

— Single phase equipment available with wide (W) or dense (A) grille option.

Fans

— Condenser fan will be direct-drive propeller type, discharging air upward.

— Condenser fan motors will be totally enclosed, 1-phase type with class B insulation and permanently lubricated bearings. Shafts will be corrosion resistant.

— Fan blades will be statically and dynamically balanced.

— Condenser fan openings will be equipped with coated steel wire safety guards.

Compressor

— Compressor will be hermetically sealed.

— Compressor will be mounted on rubber vibration isolators.

Condenser Coil

— Condenser coil will be air cooled.

— Coil will be constructed of aluminum fins mechanically bonded to copper tubes which are then cleaned, dehydrated, and sealed.

Refrigeration Components

— Refrigeration circuit components will include liquid-line shutoff valve with sweat connections, vapor-line shutoff valve with sweat connections, system charge of Puron® (R-410A) refrigerant, and compressor oil.

— Unit will be equipped with high-pressure switch, low pressure switch and filter drier for Puron refrigerant.

Operating Characteristics

— The capacity of the unit will meet or exceed _____ Btuh at a suction temperature of _____ °F/°C. The power consumption at full load will not exceed _____ kW.

— Combination of the unit and the evaporator or fan coil unit will have a total net cooling capacity of _____ Btuh or greater at conditions of _____ CFM entering air temperature at the evaporator at _____ °F/°C wet bulb and _____ °F/°C dry bulb, and air entering the unit at _____ °F/°C.

— The system will have a SEER of _____ Btuh/watt or greater at DOE conditions.

Electrical Requirements

— Nominal unit electrical characteristics will be _____ v, single phase, 60 hz. The unit will be capable of satisfactory operation within voltage limits of _____ v to _____ v.

— Unit electrical power will be single point connection.

— Control circuit will be 24v.

Special Features

— Refer to section of this literature identifying accessories and descriptions for specific features and available enhancements.

SYSTEM DESIGN SUMMARY

1. Intended for outdoor installation with free air inlet and outlet. Outdoor fan external static pressure available is less than 0.01-IN W.C.
2. Minimum outdoor operating air temperature without low-ambient operation accessory is 55°F (12.8°C).
3. Maximum outdoor operating air temperature is 125°F (51.7°C).
4. For reliable operation, unit should be level in all horizontal planes.
5. For interconnecting refrigerant tube lengths greater than 80 ft (23.4 m) and/or 35 ft (10.7 m) vertical differential, consult Residential Piping and Longline Guideline and Service Manual available from equipment distributor.
6. If any refrigerant tubing is buried, provide a 6 in. (152.4 mm) vertical rise to the valve connections at the unit. Refrigerant tubing lengths up to 36 in. (914.4 mm) may be buried without further consideration. Do not bury refrigerant lines longer than 36 in. (914.4 mm).
7. Use only copper wire for electric connection at unit. Aluminum and clad aluminum are not acceptable for the type of connector provided.
8. Do not apply capillary tube indoor coils to these units.
9. Factory-supplied filter drier must be installed.

Copyright 2014 Carrier Corp. • 7310 W. Morris St. • Indianapolis, IN 46231
Edition Date: 11/14

Catalog No: 24AAA5-01PD

Manufacturer reserves the right to change, at any time, specifications and designs without notice and without obligations.

Replaces: New

48HC
High Efficiency
Gas Heat/Electric Cooling Packaged Rooftop
3 to 12.5 Nominal Tons

Carrier
turn to the experts™

Product Data

WeatherMaster®

C10222

Puron™
the environmentally sound refrigerant

ENERGY STAR

ASHRAE 90.1 COMPLIANT

TABLE OF CONTENTS

	PAGE
FEATURES AND BENEFITS	3
MODEL NUMBER NOMENCLATURE	4
FACTORY OPTIONS AND/OR ACCESSORIES	6
AHRI COOLING RATING TABLES	9
SOUND PERFORMANCE TABLE	11
MIN/MAX AIRFLOW RATINGS TABLE	12
PHYSICAL DATA	13
CURBS & WEIGHTS DIMENSIONS	18
OPTIONS AND ACCESSORY WEIGHTS	33
APPLICATION DATA	34
SELECTION PROCEDURE	36
COOLING TABLES	37
STATIC PRESSURE ADDERS	55
ECONO, BARO RELIEF & P.E. PERFORMANCE	56
FAN PERFORMANCE	57
ELECTRICAL INFORMATION	74
SEQUENCE OF OPERATION	91
GUIDE SPECIFICATIONS	94

Carrier®

turn to the experts®

The Carrier rooftop unit (RTU) was designed by customers for customers. With “no-strip” screw collars, handled access panels, and more we’ve made your unit easy to install, easy to maintain and easy to use.

Easy to install:

All WeatherMaster® units are field-convertible to horizontal air flow, which makes it easy to adjust to unexpected job-site complications. Lighter units make easy replacement. Most of Carrier’s 3-12.5 ton 48HC rooftops fit on existing Carrier curbs dating back to 1989. Also, our large control box gives you room to work and room to mount Carrier accessory controls.

Easy to maintain:

Easy access handles by Carrier provide quick and easy access to all normally serviced components. Our “no-strip” screw system has superior holding power and guides screws into position while preventing the screw from stripping the unit’s metal. Take accurate pressure readings by reading condenser pressure with panels on. Simply remove the black, composite plug, route your gauge line(s) through the hole, and connect them to the refrigeration service valve(s). Now, you can take refrigeration system pressure readings without affecting the condenser airflow.

Easy to use:

The newly designed, central terminal board by Carrier puts all your connections and troubleshooting points in one convenient place, standard. Most low voltage connections are made to the same board and make it easy to find what you’re looking for and easy to access it. Carrier rooftops have high and low pressure switches, a filter drier, and 2-in (51mm) filters standard.

FEATURES AND BENEFITS

- Single-stage cooling capacity control on 04 to 07 models, 2-stage cooling capacity control on 08 to 14 models
- SEER up to 15.6, EER up to 13.0
- IEER's up to 13.0 with single speed indoor fan motor, and up to 14.3 with SAV™ (Staged Air Volume) 2-speed/VFD indoor fan motor system
- Exclusive non-corrosive composite condensate pan in accordance with ASHRAE 62 Standard, sloping design; side or center drain
- Gas efficiencies up to 82%
- Induced draft combustion design
- Redundant gas valve, with up to 2 stages of heating
- Pre-painted exterior panels and primer-coated interior panels tested to 500 hours salt spray protection
- TXV refrigerant metering system on each circuit
- Fully insulated cabinet
- Exclusive IGC solid-state control for on-board diagnostics with LED error code designation, burner control logic and energy saving indoor fan motor delay
- Dedicated 3-5 ton "Low NOx" models available that meet California Air Quality Management NOx requirement of 40 nangram/joule or less. Low NOx models include stainless steel heat exchangers
- Cooling operating range up to 125°F (52°C), and down to 35°F (2°C), 0°F (-18°C) on 11 size standard
- Access panels with easy grip handles
- Innovative , easy starting, no-strip screw feature on unit access panels
- Two-inch disposable return air filters
- Tool-less filter access door
- Belt drive evaporator-fan motor and pulley combinations available on all three phase models
- Electric Drive X13 (5 speed/torque) motor on 04 to 06 models
- New terminal board facilitating simple safety circuit troubleshooting and simplified control box arrangement
- Field Convertible airflow (3-12.5 ton). Being able to convert a unit from vertical airflow to horizontal makes it easy to overcome job site complications. 12.5 ton models require a simple supply air duct cover to field convert from factory vertical to horizontal.
- Provisions for thru-the-bottom power entry capability as standard
- Single point gas and electric connections
- Full perimeter base rail with built-in rigging adapters and fork truck slots
- Scroll compressors with internal line-break overload protection
- 24-volt control circuit protected with resettable circuit breaker
- Permanently lubricated evaporator-fan motor
- Totally enclosed condenser motors with permanently lubricated bearings
- Low Pressure switch and high-pressure switch protection
- Exclusive IGC anti-cycle protection for gas heat operation
- Solid-state electronic direct spark ignition system
- Flame roll-out safety protector
- Liquid line filter drier on each circuit
- Factory-installed Humidi-MiZer® Adaptive Dehumidification System on all sizes, includes MotorMaster I controller.
- Standard Warranty: 10 yr. aluminized heat exchanger, 15 yr. stainless steel heat exchanger, 5 yr. compressor, 1 yr. parts.
- Optional SAV system utilizes a Variable Frequency Drive (VFD) to automatically adjust the indoor fan motor speed between cooling stages. Available on 2-stage cooling models 08-14 with electromechanical, ComfortLink or RTU Open controls.

MODEL NUMBER NOMENCLATURE

1	2	3	4	5	6	7	8	9	10	11	12	13	14	15	16	17	18
4	8	H	C	–	D	0	8	A	3	A	5	–	D	A	0	A	0

Product Type
48 = Gas Heat Pkg. Rooftop

Model Series – WeatherMaster
HC = High Efficiency

Heat Size
D = Low Gas Heat
E = Medium Gas Heat
F = High Gas Heat
L = Low No_x – Low gas heat
M = Low No_x – Med gas heat
N = Low No_x – High gas heat
S = Low Heat w/Stainless Steel Exchanger
R = Med Heat w/Stainless Steel Exchanger
T = High Heat w/Stainless Steel Exchanger
(Low No_x models incl. Stainless Steel HX)

Refrigerant System Options
A = Single stage cooling models
B – Single stage cooling w/Humidi–MiZer
D = 2 stage Cooling
E = 2 stg cooling w/Humidi–MiZer
F = Single stg cool w/MotorMaster low amb cntl
G = 2 stg cool w/Motormaster low amb cntl

Cooling Tons
04 = 3 ton
05 = 4 ton
06 = 5 ton
07 = 6 ton
08 = 7.5 ton
09 = 8.5 ton
11 = 10 ton (12.0 EER)
12 = 10 ton (11.5 EER)
14 = 12.5 ton

Sensor Options
A = None
B = RA Smoke Detector
C = SA Smoke Detector
D = RA + SA Smoke Detector
E = CO_2 Sensor
F = RA Smoke Detector + CO_2
G = SA Smoke Detector + CO_2
H = RA + SA Smoke Detector + CO_2

Indoor Fan Options 3, 4, 5 Ton Models Only*
0 = Electric (Direct) Drive x13 motor
2 = Medium Static Option – Belt Drive
3 = High Static Option – Belt Drive
Indoor Fan Options 6–12.5 Ton Models Only
1 = Standard Static Option – Belt Drive
2 = Medium Static Option – Belt Drive
3 = High Static Option – Belt Drive
C = High Static Option w/High Eff Motor – Belt Drive

*See Price page details for specific Humidi–MiZer models

Note: On single phase (–3 voltage code) models, the following are not available as a factory installed option:
- Humidi–MiZer
- Coated coils or Cu fin coils
- Louvered hail guard
- Economizer or 2 position damper
- Powered 115 volt convenience outlet

Packaging
0 = Standard
1 = LTL

Electrical Options
A = None
B = HACR breaker
C = Non–fused disconnect
D = Thru–the–base Connections
F = Non–fused Disconn & thru–the–base
G = 2–speed indoor fan (VFD) controller
J = 2–spd contr (VFD) & non–fused disc.
K = 2 spd contr & thru–the–base
L = 2spd fan contr (VFD) &non–fused disc
M = 2 spd contr w/non–fused disc & thru–the–base conn.

Service Options
0 = None
1 = Un–powered Convenience Outlet
2 = Powered Convenience Outlet
3 = Hinged Panels
4 = Hinged Panels, un–powered C.O.
5 = Hinged Panels, powered C.O.
C = Foil faced insulation

Intake / Exhaust Options
A = None
B = Temperature Economizer w/Barometric Relief
F = Enthalpy Economizer w/Barometric Relief
K = 2 position Damper
U = Temp Ultra Low Leak Economizer w/Baro Relief
W = Enthalpy Ultra Low Leak Econo w/Baro Relief

Base Unit Controls
0 = Electromechanical Controls. Can be used with W7212 EconoMi$er IV (Non–Fault Detection and Diagnostic)
1 = PremierLink Controller
2 = RTU Open Multi–Protocol Controller
6 = Electromechanical Controls. Can be used with W7220 EconoMi$er X (Non–Fault Detection and Diagnostic)
D = ComfortLink Controls

Design Revision
– = Factory Design Revision

Voltage
1 = 575/3/60
3 = 208/230/3/60
5 = 208–230/3/60
6 = 460/3/60

Coil Options (Outdoor–Indoor–Hail Guard)
A = Al/Cu – Al/Cu
B = Pre–coat Al/Cu – Al/Cu
C = E–coat Al/Cu – Al/Cu
D = E–coat AL/Cu – E–coat AL/Cu
E = Cu/Cu – Al/Cu
F = Cu/Cu – Cu/Cu
M = Al/Cu – Al/Cu – Louvered Hail Guard
N = Pre–Coat Al/Cu – Al/Cu – Louvered Hail Guard
P = E–Coat Al/Cu – Al/Cu Louvered Hail Guard
Q = E–Coat Al/Cu – E–coat Al/Cu – Louvered Hail Guard
R – Cu/Cu – Al/Cu – Louvered Hail Guard

Not all possible options can be displayed above – see price pages or contact your Carrier Expert for more details.

Table 1 – FACTORY-INSTALLED OPTIONS AND FIELD-INSTALLED ACCESSORIES

CATEGORY	ITEM	FACTORY INSTALLED OPTION	FIELD INSTALLED ACCESSORY
Cabinet	Thru–the–base electrical or gas–line connections	X	X
	Hinged access panels	X	
	Supply duct cover – 14 size only		X
	Foil faced insulation throughout entire cabinet	X	
Coil Options	Cu/Cu indoor and/or outdoor coils[1]	X	
	Pre–coated outdoor coils[1]	X	
	Premium, E–coated outdoor coils[1]	X	
Humidity Control	Humidi–MiZer Adaptive Dehumidification System[1]	X	
Condenser Protection	Condenser coil hail guard (louvered design)[1]	X	X
Controls	Thermostats, temperature sensors, and subbases		X
	PremierLink DDC communicating controller	X	X
	ComfortLink Controls	X	
	RTU Open Multi–Protocol Controller	X	
	Smoke detector (supply and/or return air)	X	
	Time Guard II compressor delay control circuit		X
	Phase Monitor		X
Economizers & Outdoor Air Dampers	EconoMi$er IV for electro–mechanical controls – Non FDD (Standard air leak damper models)[1, 8]	X	X
	EconoMi$er 2 for DDC controls (Standard and Ultra Low Leak air damper models)[1, 9]	X	X
	Motorized 2 position outdoor–air damper[1]	X	X
	Manual outdoor–air damper (25% and 50%)	X	X
	Barometric relief[2]	X	X
	Power exhaust (prop design)		X
	EconoMi$er X for electro–mechanical controls, complies with FDD. (Standard and Ultra Low Leak air damper models)[1, 8]	X	X
Economizer Sensors & IAQ Devices	Single dry bulb temperature sensors[3]	X	X
	Differential dry bulb temperature sensors[3]		X
	Single enthalpy sensors[3]	X	X
	Differential enthalpy sensors[3]		X
	Wall or duct mounted CO_2 sensor[3]		X
	Unit mounted CO_2 sensor[3]	X	
Gas Heat	Propane conversion kit		X
	Stainless steel heat exchanger	X	
	High altitude conversion kit		X
	Flue Shield (04–12 models only)		X
	Flue Discharge Deflector		X
Indoor Motor & Drive	Multiple motor and drive packages	X	
	Staged Air Vol (SAV) system w/VFD controller (2–stage cool only with electrical mechanical and RTU Open controls)	X	
	Display Kit for SAV system with VFD		X
Low Ambient Control	Winter start kit[4]		X
	Motormaster head pressure controller to –20°F[4]		X
	Cooling Low Ambient Controller to 0°F (except 11 size)[4]	X	
Power Options	Convenience outlet (powered)[1,5]	X	
	Convenience outlet (unpowered)	X	
	HACR circuit breaker[6]	X	
	Non–fused disconnect[7]	X	
Roof Curbs	Roof curb 14–in (356mm)		X
	Roof curb 24–in (610mm)		X

NOTES:

1. Not available as factory installed option on single phase (208/230/1/60) models. Use field installed accessory where available.
2. Included with economizer.
3. Sensors used to optimize economizer performance.
4. See application data for assistance.
5. Powered convenience outlet is not available on single phase models and 11 size models with 460 and 575 voltage
6. HACR circuit breaker cannot be used when rooftop MOCP electrical rating exceeds:
   04–12 sizes – 208/230/1/60 and 208/230/3/60 = 100 amps, 460/3/60 = 90 amps, 575/3/60 = 70 amps.
   14 size – 208/230/3/60 = 200 amps, 460/3/60 = 90 amps, 575/3/60 = 80 amps.
   HACR circuit breaker on 575 volt can only be used on Wye power supply. Delta power supply is prohibited. Carrier RTUBuilder automatically selects the amp limitations.
7. Non fused disconnect switch (04–12 sizes) cannot be used when unit electrical rating exceeds:
   –Without factory installed electric heat : 208/230/1/60 and 208/230/3/60 = 80 amps (FLA), 460/3/60 and 575/3/60 = 80 amps (FLA).
   –With factory installed electric heat: 208/230/3/60 = 100 amps (FLA), 460/3/60 and 575/3/60 = 80 amps (FLA).
   Non fused disconnect switch (14 size) cannot be used when unit electrical rating exceeds:
   –Without factory installed electric heat : 208/230/3/60 = 115 amps (MCA), 460/3/60 and 575/3/60 = 100 amps (FLA).
   –With factory installed electric heat: 208/230/3/60 = 200 amps (FLA), 460/3/60 and 575/3/60 = 100 amps (FLA).
   Carrier RTUBuilder automatically selects the amps limitations.
8. FDD – (Fault Detection and Diagnostic) per California Title 24 section 120.2.
9. Models with ComfortLink and RTU Open DDC controls comply with California Title 24 Fault Detection and Diagnostic (FDD). PremierLink is non FDD.

FACTORY OPTIONS AND/OR ACCESSORIES

Economizer (dry-bulb or enthalpy)

Economizers save energy, money and improve comfort levels in the conditioned space. They bring in fresh, outside air for ventilation; and provide cool outside air to cool your building. This also is the preferred method of low ambient cooling. When integrated with CO2 sensors, economizers can provide even more savings by coupling the ventilation air to only that amount required based on space occupancy. Economizers are available, installed and tested by the factory, with either enthalpy or temperature dry-bulb inputs. There are also models for electromechanical, direct digital controllers and single speed fan or 2-speed indoor fan motors. Additional sensors are available as accessories to optimize the economizer. Economizers include gravity controlled barometric relief that helps equalize building pressure and ambient air pressures. This can be a cost effective solution to prevent building pressurization. Economizers are available in Ultra Low Leak and standard low leak versions.

CO_2 Sensor

Improves productivity and saves money by working with the economizer to intake only the correct amount of outside air for ventilation. As occupants fill your building, the CO_2 sensor detects their presence through increasing CO_2 levels, and opens the economizer appropriately.

When the occupants leave, the CO_2 levels decrease, and the sensor appropriately closes the economizer. This intelligent control of the ventilation air, called Demand Control Ventilation (DCV) reduces the overall load on the rooftop, saving money.

Smoke Detectors

Trust the experts. Smoke detectors make your application safer and your job easier. Carrier smoke detectors immediately shut down the rooftop unit when smoke is detected. They are available, installed by the factory, for supply air, return air, or both.

Louvered Hail Guards

Sleek, louvered panels protect the condenser coil from hail damage, foreign objects, and incidental contact.

Convenience Outlet (powered or un-powered)

Reduce service and/or installation costs by including a convenience outlet in your specification. Carrier will install this service feature at our factory. Provides a convenient, 15 amp, 115v GFCI receptacle with “Wet in Use” cover. The “powered” option allows the installer to power the outlet from the line side of the disconnect or load side as required by code. The “unpowered” option is to be powered from a separate 115/120v power source.

Non-fused Disconnect

This OSHA-compliant, factory-installed, safety switch allows a service technician to locally secure power to the rooftop.

Power Exhaust with Barometric Relief

Superior internal building pressure control. This field-installed accessory may eliminate the need for costly, external pressure control fans.

PremierLink, DDC Controller

This CCN controller regulates your rooftop’s performance to tighter tolerances and expanded limits, as well as facilitates zoning systems and digital accessories. It also unites your Carrier HVAC equipment together on one, coherent CCN network. The PremierLink can be factory-installed, or easily field-installed.

RTU Open, Multi-Protocol Controller

Connect the rooftop to an existing BAS without needing complicated translators or adapter modules using the RTU Open controller. This new controller speaks the 4 most common building automation system languages (Bacnet, Modbus, N2, and Lonworks). Use this controller when you have an existing BAS. Besides the 4 protocols, it also communicates with a Carrier Open system (I-Vu and VVT).

Time Guard II Control Circuit

This accessory protects your compressor by preventing short-cycling in the event of some other failure, prevents the compressor from restarting for 30 seconds after stopping. Not required with PremierLink, RTU Open, or authorized commercial thermostats.

Motorized 2-Position Damper

The new Carrier 2-position, motorized outdoor air damper admits up to 100% outside air. Using reliable, gear-driven technology, the 2-position damper opens to allow ventilation air and closes when the rooftop stops, stopping unwanted infiltration.

Manual OA Damper

Manual outdoor air dampers are an economical way to bring in ventilation air. The dampers are available in 25% and 50% versions.

Optional Humidi-MiZer Adaptive Dehumidification System

Carrier’s Humidi-MiZer adaptive dehumidification system is an all-inclusive factory installed option that can be ordered with any WeatherMaster 48HC04-14 rooftop unit.

This system expands the envelope of operation of Carrier’s WeatherMaster rooftop products to provide unprecedented flexibility to meet year round comfort conditions.

The Humidi-MiZer adaptive dehumidification system has the industry’s only dual dehumidification mode setting. The Humidi-MiZer system includes two new modes of operation.

Optional Humidi-MiZer Adaptive Dehumidification System (cont.)

The WeatherMaster 48HC04-14 rooftop coupled with the Humidi-MiZer system is capable of operating in normal design cooling mode, subcooling mode, and hot gas reheat mode. Normal design cooling mode is when the unit will operate under its normal sequence of operation by cycling compressors to maintain comfort conditions.

Subcooling mode will operate to satisfy part load type conditions when the space requires combined sensible and a higher proportion of latent load control. Hot Gas Reheat mode will operate when outdoor temperatures diminish and the need for latent capacity is required for sole humidity control. Hot Gas Reheat mode will provide neutral air for maximum dehumidification operation.

Staged Air Volume (SAV) Indoor Fan Speed System

Carrier's Staged Air Volume (SAV) system saves energy and installation time by utilizing a Variable Frequency Drive (VFD) to automatically adjust the indoor fan motor speed in sequence with the units cooling operation. Per ASHRAE 90.1 2010 standard section 6.4.3.10.b, during the first stage of cooling operation the VFD will adjust the fan motor to provide 2/3rd of the total cfm established for the unit. When a call for the second stage of cooling is required, the VFD will allow the total cfm for the unit established (100%). During the heating mode the VFD will allow total design cfm (100%) operation and during the ventilation mode the VFD will allow operation to 2/3rd of total cfm.

Compared to single speed indoor fan motor systems, Carrier's SAV system can save substantial energy, 25%+*, versus single speed indoor fan motor systems.

The VFD used in Carrier's SAV system has soft start capabilities to slowly ramp up the speeds, thus eliminating any high inrush air volume during initial start-up. It also has internal over current protection for the fan motor and a field installed display kit that allows adjustment and in depth diagnostics of the VFD.

This SAV system is available on models with 2-stage cooling operation with electrical mechanical or RTU Open, Multi Protocol controls. Both space sensor and conventional thermostats controls can be used to provide accurate control in any application.

The SAV system is very flexible for initial fan performance set up and adjustment. The standard factory shipped VFD is pre-programmed to automatically stage the fan speed between the first and second stage of cooling. The unit fan performance static pressure and cfm can be easily adjusted using the traditional means of pulley adjustments. The other means to adjust the unit static and cfm performance is to utilize the field installed Display Kit and adjust the frequency and voltage in the VFD to required performance requirements. In either case, once set up, the VFD will automatically adjust the speed between the cooling stage operations.

*Data based on .10 ($/kWh) in an office application utilizing Carrier's HAP 4.6 simulation software program

Hinged Access Panels

Allows access to unit's major components with specifically designed hinged access panels. Panels are: filter, control box, fan motor and compressor.

MotorMaster Head Pressure Controller

The MotorMaster motor controller is a low ambient, head pressure controller kit that is designed to maintain the unit's condenser head pressure during periods of low ambient cooling operation. This device should be used as an alternative to economizer free cooling not when economizer usage is either not appropriate or desired. The MotorMaster will either cycle the outdoor-fan motors or operate them at reduced speed to maintain the unit operation, depending on the model.

MotorMaster allows cooling operation down to -20°F (-29°C) ambient conditions.

Winter Start Kit

The winter start kit by Carrier extends the low ambient limit of your rooftop to 25°F (-4°C). The kit bypasses the low pressure switch, preventing nuisance tripping of the low pressure switch. Other low ambient precautions may still be prudent.

Propane Heating

Convert your gas heat rooftop from standard natural gas operation to Propane using this field-installed kit.

High Altitude Heating

High altitudes have less oxygen, which means heat exchangers need less fuel. The new gas orifices in this field-installed kit make the necessary adjustment for high altitude applications. They restore the optimal fuel to air mixture and maintain healthy combustion at altitudes above 2000 ft (610m). Kits may not be required in all areas.

Flue Discharge Deflector

The flue discharge deflector is a useful accessory when flue gas recirculation is a concern. By venting the flue discharge upwards, the deflector minimizes the chance for a neighboring unit to intake the flue exhaust.

Optional Stainless Steel Heat Exchanger

The stainless steel heat exchanger option provides the tubular heat exchanger be made out of a minimum 20 gauge type 409 stainless steel for applications where the mixed air to the heat exchanger is expected to drop below 45°F (7°C). Stainless steel may be specified on applications where the presence of airborne contaminants require its use (applications such as paper mills) or in area with very high outdoor humidity that may result in severe condensation in the heat exchanger during cooling operation.

Flue Discharge Heat Shield

The flue discharge heat shield keeps people from touching the rooftop unit's potentially hot flue discharge. This is especially useful for ground level applications, where more, untrained people could have access to the unit's exterior (04-12 models only).

Alternate Motors and Drives

Some applications need larger horsepower motors, some need more airflow, and some need both. Regardless of the case, your Carrier expert has a factory installed combination to meet your application. A wide selection of motors and pulleys (drives) are available, factory installed, to handle nearly any application.

Thru-the-Base Connections

Thru-the-base connections, available as either an accessory or as a factory option, are necessary to ensure proper connection and seal when routing wire and piping through the rooftop's basepan and curb. These couplings eliminate roof penetration and should be considered for gas lines, main power lines, as well as control power.

ComfortLink Controls

Models with the optional Carrier ComfortLink Controls allow added unit diagnostics and operation setup capabilities, as well as controlling logic for single zone Variable Air Volume (VAV) applications.

The ComfortLink control is your link to a world of simple and easy to use rooftop units that offer outstanding performance and value. It optimizes the performance of the refrigeration circuits as conditions change, resulting in the following features:

- Better control of temperature and humidity
- Superior reliability
- Automatic redundancy
- Low ambient cooling operation to 0°F (-18°C)
- More accurate diagnostics, at unit or remote

The ComfortLink Scrolling Marquee is very easy to use. The messages are displayed in easy to understand English, no decoding is required. A scrolling readout provides detailed explanations of control information. Only four, large, easy-to-use buttons are required to maneuver through the entire menu. The readout is designed to be visible even in the brightest sunlight. A handheld Navigator accessory or wall-mounted System Pilot™ accessory can be used for added service flexibility.

The ComfortLink control provides unparalleled service diagnostic information. Temperature and pressure can be read directly from the display with no need for separate gauges. Other data, such as compressor cycles, unit run time hours, current alarms, can also be accessed. A history of alarms is also available for viewing.

The service run test can be very helpful when troubleshooting. The user can run test major components to determine the root cause of a problem. The unit can be run-tested before an installation is complete to ensure satisfactory start-up. To ensure reliability, the ComfortLink control prevents reverse compressor rotation. No laptop computers are required for start-up.

Time schedules are built in and the Scrolling Marquee display provides easy access to setpoints. The ComfortLink control accepts input from a CO_2 sensor and a smoke detector. Both are available as factory installed options or as field installed accessories.

HACR Breaker

These manual reset devices provide overload and short circuit protection for the unit. Factory wired and mounted with the units with access cover to help provide environment protection.

On 575V applications, HACR breaker can only be used with WYE power distribution systems. Use on Delta power distribution systems is prohibited.

Foil Faced Insulated Cabinet

Cabinet is fully insulated with non-fibrous, foil faced cleanable insulation that is secured and encapsulated in unit design.

Low Ambient Controller

The low ambient controller is a head pressure controller kit that is designed to maintain the unit's condenser head pressure during periods of low ambient cooling operation. This device should be used as an alternative to economizer free cooling not when economizer usage is either not appropriate or desired. The low ambient controller will either cycle the outdoor fan motors or operate them at reduced speed to maintain the unit operation, depending on the model. This controller allows cooling operation down to 0°F (-18°C) ambient conditions. (Not available on 11 size models as standard unit cooling operation down to 0°F /-18°C.)

Table 2 – AHRI COOLING RATING TABLE 1-STAGE COOLING

UNIT	COOLING STAGES	NOM. CAPACITY (TONS)	NET COOLING CAPACITY (MBH)	TOTAL POWER (kW)	SEER	EER	IEER
A04	1	3	36.0	2.9	15.00	12.50	–
A05	1	4	48.5	3.7	15.60	13.00	–
A06	1	5	57.5	4.6	15.20	12.45	–
A07	1	6	73.0	6.0	–	12.00	13.00

Table 3 – AHRI COOLING RATING TABLE 2-STAGE COOLING

UNIT	COOLING STAGES	NOM. CAPACITY (TONS)	NET COOLING CAPACITY (MBH)	TOTAL POWER (kW)	EER	IEER WITH SINGLE SPEED INDOOR MOTOR	IEER WITH 2–SPEED INDOOR MOTOR
D08	2	7.5	89.0	7.4	12.0	13.0	13.8
D09	2	8.5	97.0	8.1	12.0	13.0	13.8
D11	2	10.0	111.0	9.3	12.0	12.6	14.3
D12	2	10.0	115.0	10.0	11.5	12.0	12.4
D14	2	12.5	146.0	11.9	12.2	13.0	13.9

LEGEND

– – Not Applicable
AHRI – Air Conditioning, Heating and Refrigeration Institute Test Standard
ASHRAE – American Society of Heating, Refrigerating and Air Conditioning, Inc.
EER – Energy Efficiency Ratio
IEER – Integrated Energy Efficiency Ratio
SEER – Seasonal Energy Efficiency Ratio

Use of the AHRI Certified TM Mark indicates a manufacturer's participation in the program For verification of certification for individual products, go to www.ahridirectory.org.

or

NOTES:

1. Rated in accordance with AHRI Standards 210/240 (04–06 size) and 340/360 (07–14 size).
2. Ratings are based on:
   Cooling Standard: 80°F (27°C) db, 67°F (19°C) wb indoor air temp and 95°F (35°C) db outdoor air temp.
   IEER Standard: A measure that expresses cooling part–load EER efficiency for commercial unitary air–conditioning and heat pump equipment on the basis of weighted operation at various load capacities.
3. All 48HC units comply with ASHRAE 90.1 and Energy Star Energy Standard for minimum SEER and EER requirements.
4. 48HC units comply with US Energy Policy Act (2005). To evaluate code compliance requirements, refer to state and local codes.

Table 4 – HEATING RATING TABLE - NATURAL GAS & PROPANE

UNITS		GAS HEAT	AL/SS HEAT EXCHANGER INPUT / OUTPUT STAGE 1 (MBH)	AL/SS HEAT EXCHANGER INPUT / OUTPUT STAGE 2 (MBH)	TEMP RISE (DEG F)	THERMAL EFFICIENCY (%)	AFUE (%)
Single Phase	04	LOW	–	72 / 56	25 – 55	82%	79.1%
		MED	–	115 / 89	55 – 85	80%	78.5%
		HIGH	–	–	–	–	–
	05	LOW	–	72 / 56	25 – 55	82%	79.1%
		MED	–	115 / 90	35 – 65	81%	79%
		HIGH	–	150 / 117	50 – 80	80%	78.8%
	06	LOW	–	72 / 56	20 – 55	82%	79.1%
		MED	–	115 / 90	30 – 65	81%	79%
		HIGH	–	150 / 117	40 – 80	80%	78.8%
Three Phase	04	LOW	50 / 41	72 / 56	25 – 55	82%	–
		MED	82 / 66	115 / 89	55 – 85	80%	–
		HIGH	–	–	–	–	–
	05	LOW	50 / 41	72 / 56	25 – 55	82%	–
		MED	82 / 66	115 / 90	35 – 65	81%	–
		HIGH	120 / 96	150 / 117	50 – 80	80%	–
	06	LOW	50 / 41	72 / 56	20 – 55	82%	–
		MED	82 / 66	115 / 90	30 – 65	81%	–
		HIGH	120 / 96	150 / 117	40 – 80	80%	–
	07	LOW	50 / 41	72 / 59	15 – 55	82%	–
		MED	90 / 73	125 / 103	20 – 50	82%	–
		HIGH	105 / 84	150 / 120	30 – 60	81%	–
	08	LOW	90 / 73	125 / 103	20 – 50	82%	–
		MED	120 / 98	180 / 148	35 – 65	82%	–
		HIGH	180 / 147	224 / 184	45 – 75	82%	–
	09	LOW	90 / 73	125 / 103	20 – 50	82%	–
		MED	120 / 98	180 / 148	30 – 65	82%	–
		HIGH	180 / 147	224 / 184	40 – 75	82%	–
	11	LOW	120 / 98	180 / 148	25 – 65	82%	–
		MED	180 / 147	224 / 184	30 – 65	82%	–
		HIGH	200 / 160	250 / 205	35 – 70	80%	–
	12	LOW	120 / 98	180 / 148	25 – 65	82%	–
		MED	180 / 147	224 / 184	30 – 65	82%	–
		HIGH	200 / 160	250 / 205	35 – 70	80%	–
	14	LOW	120 / 96	150 / 120	15 – 60	80%	–
		MED	144 / 118	180 / 146	20 – 55	81%	–
		HIGH	192 / 156	240 / 195	25 – 60	81%	–

– Not Applicable

NOTES:

Heat ratings are for natural gas heat exchangers operated at or below 2000 ft (610 m). For information on Propane or altitudes above 2000 ft (610 m), see the Application Data section of this book. Accessory Propane/High Altitude kits are also available.

In the USA the input rating for altitudes above 2000 ft (610m) must be derated by 4% for each 1000 ft (305 m) above sea level. In Canada, the input rating must be derated by 10% for altitudes of 2000 ft (610 m) to 4500 ft (1372 m) above sea level.

Table 5 – HEATING RATING TABLE - LOW NO_X[1]

UNIT		GAS HEAT	LOW NOx HEAT EXCHANGER INPUT / OUTPUT STAGE 1 (MBH)	TEMP RISE (DEG F)	THERMAL EFFICIENCY (%)	AFUE (%)
Single Phase	04	LOW	60 / 47	20 – 50	81%	80.6%
		MED	90 / 72	30 – 60	81%	80.6%
		HIGH	–	–	–	–
	05	LOW	60 / 47	20 – 50	81%	80.6%
		MED	90 / 72	30 – 60	81%	80.6%
		HIGH	120 / 97	40 – 70	81%	81.5%
	06	LOW	60 / 47	15 – 50	81%	80.6%
		MED	90 / 72	25 – 60	80%	80.6%
		HIGH	120 / 97	35 – 70	80%	81.5%
Three Phase	04	LOW	60 / 47	20 – 50	81%	–
		MED	90 / 72	30 – 60	81%	–
		HIGH	–	–	–	–
	05	LOW	60 / 47	20 – 50	81%	–
		MED	90 / 72	30 – 60	81%	–
		HIGH	120 / 97	40 – 70	81%	–
	06	LOW	60 / 47	15 – 50	81%	–
		MED	90 / 72	25 – 60	80%	–
		HIGH	120 / 97	35 – 70	80%	–

– Not Applicable

NOTE:

1. Units meet California's South Coast Air Quality Management District (SCAQMD) Low–NO_x emissions requirement of 40 nanograms per joule or less.

Table 6 – SOUND PERFORMANCE TABLE

UNIT	COOLING STAGES	OUTDOOR SOUND (dB) AT 60								
		A–WEIGHTED	63	125	250	500	1000	2000	4000	8000
A04	1	76	78.2	78.0	74.2	73.3	70.6	66.0	62.4	56.9
A05	1	78	84.7	83.6	77.1	74.6	72.3	68.3	64.7	60.9
A06	1	77	87.5	82.5	76.1	73.6	71.3	67.1	64.1	60.0
A07	1	82	90.1	82.6	81.0	79.4	77.0	73.0	70.4	66.7
D08	2	82	90.6	84.3	80.2	79.3	77.1	72.2	67.4	63.7
D09	2	82	88.6	85.0	81.6	79.5	77.4	74.1	71.0	66.3
D11	2	87	85.9	87.9	85.6	84.4	82.8	78.5	74.9	72.5
D12	2	87	85.9	87.9	85.6	84.4	82.8	78.5	74.9	72.5
D14	2	83	89.3	86.0	82.9	80.7	78.5	73.6	69.6	64.5

LEGEND

dB – Decibel

NOTES:

1. Outdoor sound data is measure in accordance with AHRI.
2. Measurements are expressed in terms of sound power. Do not compare these values to sound pressure values because sound pressure depends on specific environmental factors which normally do not match individual applications. Sound power values are independent of the environment and therefore more accurate.
3. A–weighted sound ratings filter out very high and very low frequencies, to better approximate the response of "average" human ear. A–weighted measurements for Carrier units are taken in accordance with AHRI.

Table 7 – MINIMUM - MAXIMUM AIRFLOW RATINGS - NATURAL GAS & PROPANE

UNIT	HEAT LEVEL	COOLING				HEATING	
		Minimum Single Speed Fan Motor	Minimum 2–speed Fan Motor (at high speed)	Minimum 2–speed Fan Motor (at low speed)	Maximum	Minimum	Maximum
48HC**04	LOW	900	–	–	1500	990	2190
	MED					1000	1550
	HIGH					–	–
48HC**05	LOW	1200	–	–	2000	990	2190
	MED					1330	2460
	HIGH					1390	2220
48HC**06	LOW	1500	–	–	2500	990	2730
	MED					1330	2880
	HIGH					1390	2780
48HC**07	LOW	1800	–	–	3000	990	3640
	MED					1330	4750
	HIGH					1390	3750
48HC**08	LOW	2250	2535	1673	3750	1900	4750
	MED					2100	3900
	HIGH					2270	3780
48HC**09	LOW	2550	2550	1683	4250	1900	4750
	MED					2100	4560
	HIGH					2270	4250
48HC**11	LOW	3000	3380	2231	5000	1900	4750
	MED					2100	4560
	HIGH					2270	4250
48HC**12	LOW	3000	3380	2231	5000	2100	5470
	MED					2620	5670
	HIGH					2650	5290
48HC**14	LOW	3750	4225	2789	6250	1880	7500
	MED					2450	6750
	HIGH					3000	7200

– Not available

Table 8 – PHYSICAL DATA (COOLING) 3 - 6 TONS

	48HC*04	48HC*05	48HC*06	48HC*07
Refrigeration System				
# Circuits / # Comp. / Type	1 / 1 / Scroll	1 / 1 / Scroll	1 / 1 / Scroll	1 / 1 / Scroll
Puron® refrigerant (R–410A) charge (lbs–oz)	9 – 0	12 – 8	13 – 3	14 – 0
Humidi–MiZer Puron refrigerant (R–410A) charge (lbs–oz)	11 – 0	19 – 12	20 – 0	22 – 8
Metering Device	TXV	TXV	TXV	TXV
High–press. Trip / Reset (psig)	630 / 505	630 / 505	630 / 505	630 / 505
Low–press. Trip / Reset (psig)	54 / 117	54 / 117	54 / 117	54 / 117
Compressor Capacity Staging (%)	100%	100%	100%	100%
Evap. Coil				
Material (Tube Fin)	Cu / Al	Cu / Al	Cu / Al	Cu / Al
Coil type	3/8–in RTPF	3/8–in RTPF	3/8–in RTPF	3/8–in RTPF
Rows / FPI	3 / 15	3 / 15	4 / 15	3 / 15
Total Face Area (ft^2)	5.5	7.3	7.3	8.9
Condensate Drain Conn. Size	3/4–in	3/4–in	3/4–in	3/4–in
Humidi–MiZer Coil				
Material (Tube Fin)	Cu / Al	Cu / Al	Cu / Al	Cu / Al
Coil type	3/8–in RTPF	3/8–in RTPF	3/8–in RTPF	3/8–in RTPF
Rows / FPI	1 / 17	2 / 17	2 / 17	2 / 17
Total Face Area (ft^2)	3.9	5.2	5.2	5.2
Evap. Fan and Motor				
Standard Static 1 phase				
Motor Qty / Drive Type	1 / Direct	1 / Direct	1 / Direct	–
Max BHP	1.0	1.0	1.0	–
RPM Range	600–1200	600–1200	600–1200	–
Motor Frame Size	48	48	48	–
Fan Qty / Type	1 / Centrifugal	1 / Centrifugal	1 / Centrifugal	–
Fan Diameter (in)	10 x 10	10 x 10	10 x 10	–
Standard Static 3 phase				
Motor Qty / Drive Type	1 / Direct	1 / Direct	1 / Direct	1 / Belt
Max BHP	1.0	1.0	1.0	1.7
RPM Range	600–1200	600–1200	600–1200	489–747
Motor Frame Size	48	48	48	56
Fan Qty / Type	1 / Centrifugal	1 / Centrifugal	1 / Centrifugal	1 / Centrifugal
Fan Diameter (in)	10 x 10	10 x 10	11 x 10	15 x 15
Standard Static 3 phase*				
Motor Qty / Drive Type	1 / Belt	1 / Belt	1 / Belt	1 / Belt
Max BHP	1.7	1.7	1.7	1.7
RPM Range	560–854	560–854	770–1175	489–747
Motor Frame Size	48	48	48	56
Fan Qty / Type	1 / Centrifugal	1 / Centrifugal	1 / Centrifugal	1 / Centrifugal
Fan Diameter (in)	10 x 10	10 x 10	10 x 10	15 x 15

* Humidi–MiZer models only
– Not Applicable

		48HC*04	48HC*05	48HC*06	48HC*07
Evap. Fan and Motor					
Medium Static 3 phase	Motor Qty / Drive Type	1 / Belt	1 / Belt	1 / Belt	1 / Belt
	Max BHP	1.7	1.7	2.4	2.9
	RPM Range	770–1175	920–1303	1035–1466	733–949
	Motor Frame Size	48	56	56	56
	Fan Qty / Type	1 / Centrifugal	1 / Centrifugal	1 / Centrifugal	1 / Centrifugal
	Fan Diameter (in)	10 x 10	10 x 10	10 x 10	15 x 15
Medium Static 3 phase*	Motor Qty / Drive Type	1 / Belt	1 / Belt	1 / Belt	–
	Max BHP	1.7	1.7	2.4	–
	RPM Range	770–1175	770–1175	1035–1466	–
	Motor Frame Size	48	48	56	–
	Fan Qty / Type	1 / Centrifugal	1 / Centrifugal	1 / Centrifugal	–
	Fan Diameter (in)	10 x 10	10 x 10	10 x 10	–
High Static 3 phase	Motor Qty / Drive Type	1 / Belt	1 / Belt	1 / Belt	1 / Belt
	Max BHP	2.4	2.9	2.9	4.7
	RPM Range	1035–1466	1208–1639	1303–1687	909–1102
	Motor Frame Size	56	56	56	14
	Fan Qty / Type	1 / Centrifugal	1 / Centrifugal	1 / Centrifugal	1 / Centrifugal
	Fan Diameter (in)	10 x 10	10 x 10	10 x 10	15 x 15
Condenser Coil					
	Material (Tube/Fin)	Cu / Al	Cu / Al	Cu / Al	Cu / Al
	Coil type	3/8–in RTPF	3/8–in RTPF	3/8–in RTPF	3/8–in RTPF
	Rows / FPI	2 / 17	2 / 17	2 / 17	2 / 17
	Total Face Area (ft^2)	12.7	21.3	21.3	20.5
Condenser fan / motor					
	Qty / Motor Drive Type	1/ Direct	1/ Direct	1/ Direct	2/ Direct
	Motor HP / RPM	1/8 / 825	1/4 / 1100	1/4 / 1100	1/4 / 1100
	Fan diameter (in)	22	22	22	22
Filters					
	RA Filter # / Size (in)	2 / 16 x 25 x 2	4 / 16 x 16 x 2	4 / 16 x 16 x 2	4 / 16 x 20 x 2
	OA inlet screen # / Size (in)	1 / 20 x 24 x 1	1 / 20 x 24 x 1	1 / 20 x 24 x 1	1 / 20 x 36 x 1

* Humidi–MiZer models only
– Not Applicable

Table 9 – PHYSICAL DATA (HEATING) 3 - 6 TONS

	48HC**04	48HC**05	48HC**06	48HC**07
Gas Connection				
# of Gas Valves	1	1	1	1
Nat. gas supply line press (in. w.g.)/(PSIG)	4 –13 / 0.18 – 0.47	4 –13 / 0.18 – 0.47	4 –13 / 0.18 – 0.47	4 –13 / 0.18 – 0.47
Propane supply line press (in. w.g.)/(PSIG)	11 –13 / 0.40 – 0.47	11 –13 / 0.40 – 0.47	11 –13 / 0.40 – 0.47	11 –13 / 0.40 – 0.47
Heat Anticipator Setting (Amps)				
1st stage	0.14	0.14	0.14	0.14
2nd stage	0.14	0.14	0.14	0.14
Natural Gas, Propane Heat				
LOW # of stages / # of burners (total)	1 or 2 / 2	1 or 2 / 2	1 or 2 / 2	2 / 2
LOW Connection size	1/2–in NPT	1/2–in NPT	1/2–in NPT	1/2–in NPT
LOW Rollout switch opens / closes	195 / 115	195 / 115	195 / 115	195 / 115
LOW Temperature rise range (F)	25 – 55	25 – 55	20 – 55	15 – 55
MED # of stages / # of burners (total)	1 or 2 / 3	1 or 2 / 3	1 or 2 / 3	2 / 3
MED Connection size	1/2–in NPT	1/2–in NPT	1/2–in NPT	1/2–in NPT
MED Rollout switch opens / closes	195 / 115	195 / 115	195 / 115	195 / 115
MED Temperature rise range (F)	55 – 85	35 – 65	30 – 65	20 – 50
HIGH # of stages / # of burners (total)	–	1 or 2 / 3	1 or 2 / 3	2 / 4
HIGH Connection size	–	1/2–in NPT	1/2–in NPT	3/4–in NPT
HIGH Rollout switch opens / closes	–	195 / 115	195 / 115	195 / 115
HIGH Temperature rise range (F)	–	50 – 80	40 – 80	30 – 60
Low NO_x Gas Heat				
LOW # of stages / # of burners (total)	1 / 2	1 / 2	1 / 2	–
LOW Connection size	1/2–in NPT	1/2–in NPT	1/2–in NPT	–
LOW Rollout switch opens / closes	195 / 115	195 / 115	195 / 115	–
LOW Temperature rise range (F)	20 – 50	20 – 50	15 – 50	–
MED # of stages / # of burners (total)	1 / 3	1 / 3	1 / 3	–
MED Connection size	1/2–in NPT	1/2–in NPT	1/2–in NPT	–
MED Rollout switch opens / closes	195 / 115	195 / 115	195 / 115	–
MED Temperature rise range (F)	30 – 60	30 – 60	25 – 60	–
				–
HIGH # of stages / # of burners (total)	–	1 / 3	1 / 3	–
HIGH Connection size	–	1/2–in NPT	1/2–in NPT	–
HIGH Rollout switch opens / closes	–	195 / 115	195 / 115	–
HIGH Temperature rise range (F)	–	40 – 70	35 – 70	–

– Not Applicable

Table 10 – PHYSICAL DATA (COOLING) 7.5 - 12.5 TONS

	48HC*08	48HC*09	48HC*11	48HC*12	48HC*14
Refrigeration System					
# Circuits / # Comp. / Type	2 / 2 / Scroll	2 / 2 / Scroll	2 / 2 / Scroll	2 / 2 / Scroll	2 / 2 / Scroll
Puron Refrig (R–410A) charge A/B (lbs–oz)	9 – 10 / 9 – 10	9 – 14 / 9 – 14	12 – 10 / 13 – 0	12 – 11 / 12 – 5	16 – 7 / 15 – 5
Humidi–MiZer Puron Refrig (R–410A) charge A/B (lbs–oz)	17–0 / 17–0	15–2 / 15–2	18–0 / 18–0	18–3 / 17–3	25–8 / 22–8
Metering device	TXV	TXV	TXV	TXV	TXV
High–press. Trip / Reset (psig)	630 / 505	630 / 505	630 / 505	630 / 505	630 / 505
Low–press. Trip / Reset (psig)	54 / 117	54 / 117	27 / 44	54 / 117	54 / 117
Compressor Capacity Staging (%)	50% / 100%	50% / 100%	50% / 100%	50% / 100%	50% / 100%
Evaporator Coil					
Material (Tube/Fin)	Cu / Al	Cu / Al	Cu / Al	Cu / Al	Cu / Al
Coil type	3/8–in RTPF	3/8–in RTPF	3/8–in RTPF	3/8–in RTPF	3/8–in RTPF
Rows / FPI	4 / 15	4 / 15	4 / 15	4 / 15	4 / 15
Total face area (ft2)	11.1	11.1	11.1	11.1	17.5
Condensate drain conn. size	3/4–in	3/4–in	3/4–in	3/4–in	3/4–in
Humidi–MiZer Coil					
Material (Tube/Fin)	Cu / Al	Cu / Al	Cu / Al	Cu / Al	Cu / Al
Coil type	3/8–in RTPF	3/8–in RTPF	3/8–in RTPF	3/8–in RTPF	3/8–in RTPF
Rows / FPI	2 / 17	2 / 17	2 / 17	2 / 17	1 / 17
Total face area (ft2)	6.3	8.4	8.6	8.6	13.8
Evaporator fan and motor					
Standard Static 3 phase					
Motor Qty / Drive type	1 / Belt	1 / Belt	1 / Belt	1 / Belt	1 / Belt
Max BHP	1.7	1.7	2.4	2.4	2.9
RPM range	518–733	518–733	591–838	591–838	440–609
Motor Frame Size	56	56	56	56	56Y
Fan Qty / Type	1 / Centrifugal	1 / Centrifugal	1 / Centrifugal	1 / Centrifugal	1 / Centrifugal
Fan Diameter (in)	15 x 15	15 x 15	15 x 15	15 x 15	18 x 18
Medium Static 3 phase					
Motor Qty / Drive type	1 / Belt	1 / Belt	1 / Belt	1 / Belt	1 / Belt
Max BHP	2.4	2.4	3.7	3.7	3.7
RPM range	690–936	690–936	838–1084	838–1084	609–778
Motor Frame Size	56	56	56HZ	56HZ	56HZ
Fan Qty / Type	1 / Centrifugal	1 / Centrifugal	1 / Centrifugal	1 / Centrifugal	1 / Centrifugal
Fan Diameter (in)	15 x 15	15 x 15	15 x 15	15 x 15	18 x 18
High Static 3 phase					
Motor Qty / Drive type	1 / Belt	1 / Belt	1 / Belt	1 / Belt	1 / Belt
Max BHP	3.7	3.7	4.9	4.9	6.1*
RPM range	838–1084	838–1084	1022–1240	1022–1240	776–955
Motor Frame Size	56	56	145TY	145TY	S184T
Fan Qty / Type	1 / Centrifugal	1 / Centrifugal	1 / Centrifugal	1 / Centrifugal	1 / Centrifugal
Fan Diameter (in)	15 x 15	15 x 15	15 x 15	15 x 15	18 x 18
Condenser Coil					
Material (Tube/Fin)	Cu / Al	Cu / Al	Cu / Al	Cu / Al	Cu / Al
Coil type	3/8–in RTPF	3/8–in RTPF	3/8–in RTPF	3/8–in RTPF	3/8–in RTPF
Rows / FPI	2 / 17	2 / 17	3 / 17	3 / 17	2 / 17
Total Face Area (ft^2)	25.1	25.1	25.1	25.1	2 at 23.1
Condenser fan / motor					
Qty / Motor drive type	2 / direct	2 / direct	1 / direct ECM	1 / direct	3 / direct
Motor HP / RPM	1/4 / 1100	1/4 / 1100	1 / 1050	1 / 1175	1/4 / 1100
Fan diameter (in)	22	22	30	30	22
Filters					
RA Filter # / size (in)	4 / 20 x 20 x 2	4 / 20 x 20 x 2	4 / 20 x 20 x 2	4 / 20 x 20 x 2	6 / 18 x 24 x 2 Vert 2 / 24 x 27 x 1
OA inlet screen # / size (in)	1 / 20 x 24 x 1	1 / 20 x 24 x 1	1 / 20 x 24 x 1	1 / 20 x 24 x 1	Horz 1 / 30 x 39 x 1

– Not Applicable

Table 11 – PHYSICAL DATA (HEATING) 7.5 - 12.5 TONS

	48HC**08	48HC**09	48HC**11	48HC**12	48HC**14
Gas Connection					
# of Gas Valves	1	1	1	1	1
Nat. gas supply line press (in. w.g.)/(PSIG)	4 – 13 / 0.18 – 0.47	4 – 13 / 0.18 – 0.47	4 – 13 / 0.18 – 0.47	4 – 13 / 0.18 – 0.47	5 – 13 / 0.18 – 0.47
Propane supply line press (in. w.g.)/(PSIG)	11 – 13 / 0.40 – 0.47	11 – 13 / 0.40 – 0.47	11 – 13 / 0.40 – 0.47	11 – 13 / 0.40 – 0.47	11 – 13 / 0.40 – 0.47
Heat Anticipator Setting (Amps)					
1st stage	0.14	0.14	0.14	0.14	0.14
2nd stage	0.14	0.14	0.14	0.14	0.14
Natural Gas, Propane Heat					
LOW: # of stages / # of burners (total)	2 / 3	2 / 3	2 / 4	2 / 4	2 / 5
LOW: Connection size	1/2 – in NPT	1/2 – in NPT	3/4 – in NPT	3/4 – in NPT	3/4 – in NPT
LOW: Rollout switch opens / closes	195 / 115	195 / 115	195 / 115	195 / 115	225 / 145
LOW: Temperature rise range (F)	20 – 50	20 – 50	25 – 65	25 – 65	15 – 60
MED: # of stages / # of burners (total)	2 / 4	2 / 4	2 / 5	2 / 5	2 / 6
MED: Connection size	3/4 – in NPT	3/4 – in NPT	3/4 – in NPT	3/4 – in NPT	3/4 – in NPT
MED: Rollout switch opens / closes	195 / 115	195 / 115	195 / 115	195 / 115	225 / 145
MED: Temperature rise range (F)	35 – 65	30 – 65	30 – 65	30 – 65	20 – 55
HIGH: # of stages / # of burners (total)	2 / 5	2 / 5	2 / 5	2 / 5	2 / 8
HIGH: Connection size	3/4 – in NPT	3/4 – in NPT	3/4 – in NPT	3/4 – in NPT	3/4 – in NPT
HIGH: Rollout switch opens / closes	195 / 115	195 / 115	195 / 115	195 / 115	225 / 145
HIGH: Temperature rise range (F)	45 – 75	40 – 75	35 – 70	35 – 70	25 – 60

CURBS & WEIGHTS DIMENSIONS - 48HC 04-06

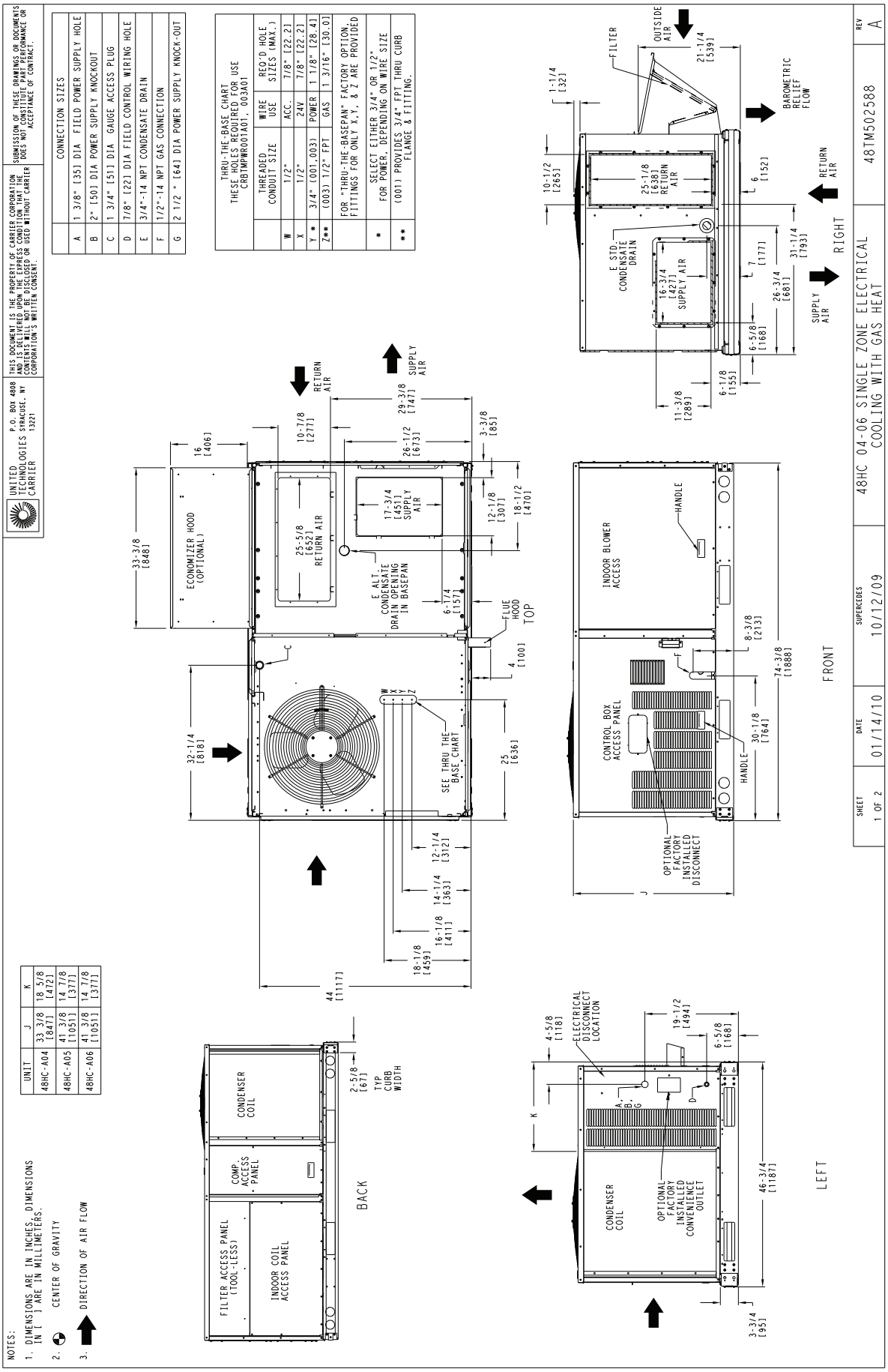

C10104

Fig. 1 - Dimensions 48HC 04-06

CURBS & WEIGHTS DIMENSIONS - 48HC 04-06 (cont.)

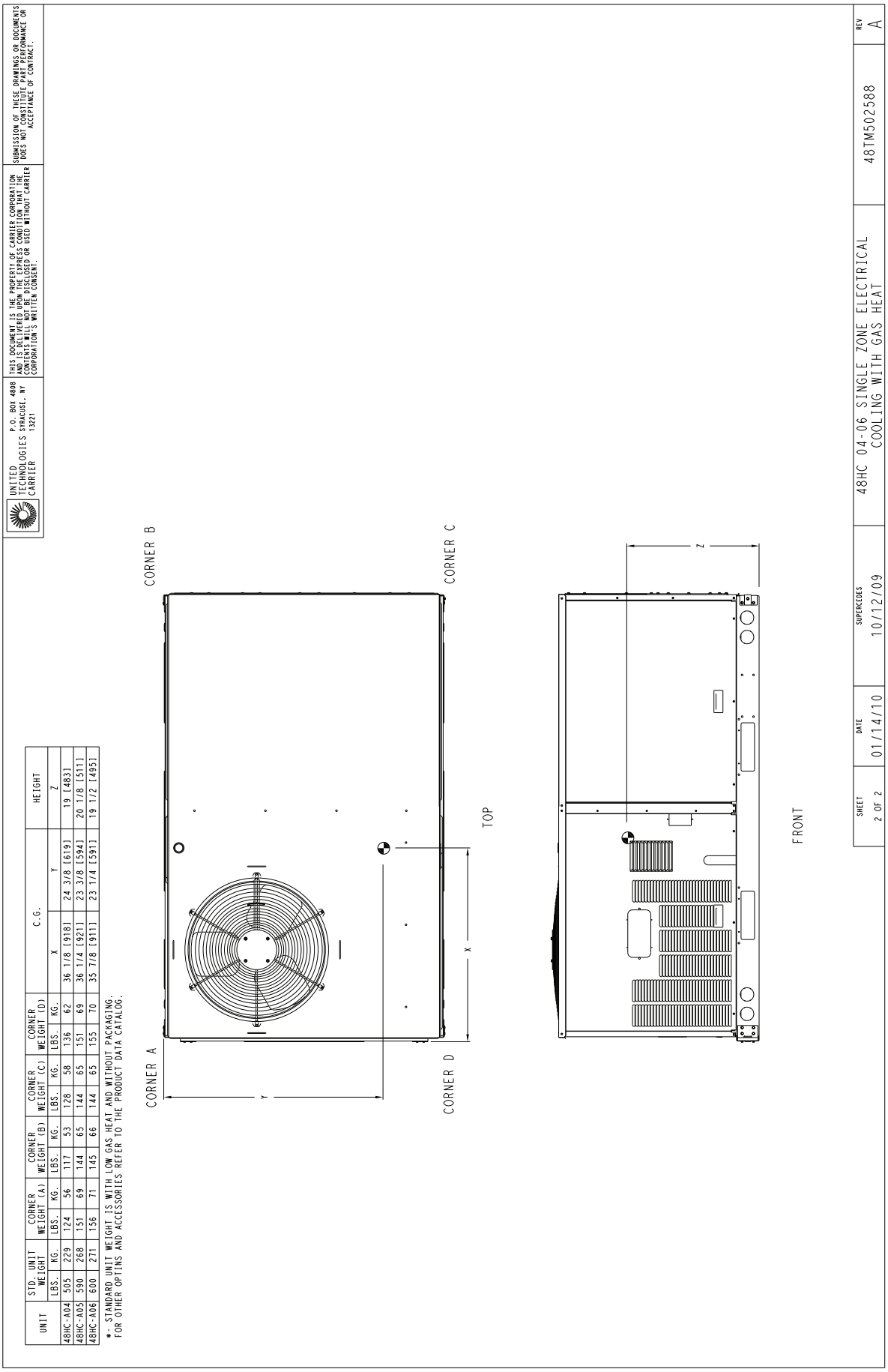

UNIT	STD. UNIT WEIGHT		CORNER WEIGHT (A)		CORNER WEIGHT (B)		CORNER WEIGHT (C)		CORNER WEIGHT (D)		C.G.		HEIGHT
	LBS.	KG.	LBS.	KG.	LBS.	KG.	LBS.	KG.	LBS.	KG.	X	Y	Z
48HC-A04	505	229	124	56	117	53	128	58	136	62	36 1/8 [918]	24 3/8 [619]	19 [483]
48HC-A05	590	268	151	69	144	65	144	65	151	69	36 1/4 [921]	23 3/8 [594]	20 1/8 [511]
48HC-A06	600	271	156	71	145	66	144	65	155	70	35 7/8 [911]	23 1/4 [591]	19 1/2 [495]

*- STANDARD UNIT WEIGHT IS WITH LOW GAS HEAT AND WITHOUT PACKAGING.
FOR OTHER OPTINS AND ACCESSORIES REFER TO THE PRODUCT DATA CATALOG.

C10105

Fig. 2 - Dimensions 48HC 04-06

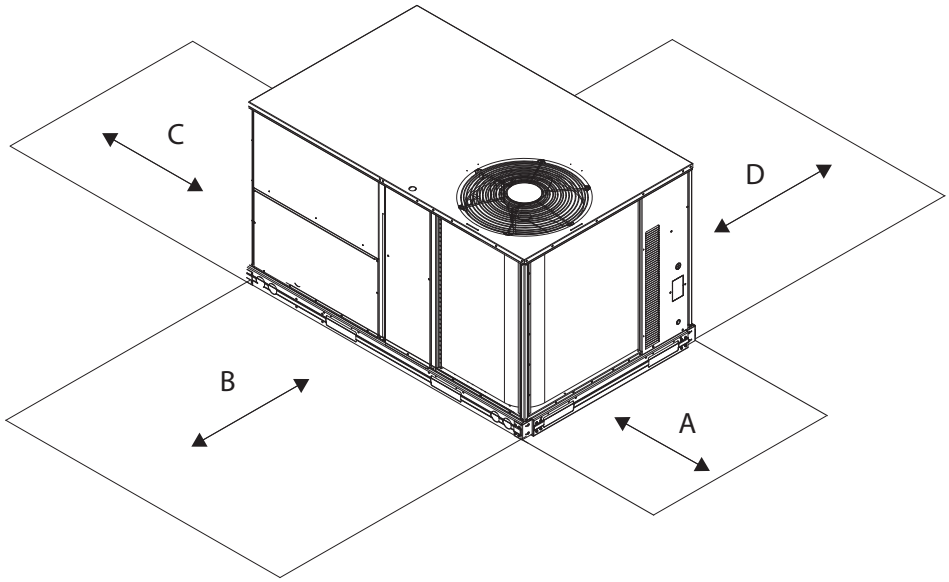

C08337

Fig. 3 - Service Clearance

LOC	DIMENSION	CONDITION
A	48–in (1219 mm)	Unit disconnect is mounted on panel
	18–in (457 mm)	No disconnect, convenience outlet option
	18–in (457 mm)	Recommended service clearance
	12–in (305 mm)	Minimum clearance
B	42–in (1067 mm)	Surface behind servicer is grounded (e.g., metal, masonry wall)
	36–in (914 mm)	Surface behind servicer is electrically non–conductive (e.g., wood, fiberglass)
	Special	Check for sources of flue products within 10–ft of unit fresh air intake hood
C	36–in (914 mm)	Side condensate drain is used
	18–in (457 mm)	Minimum clearance
D	48–in (1219 mm)	No flue discharge accessory installed, surface is combustible material
	42–in (1067 mm)	Surface behind servicer is grounded (e.g., metal, masonry wall, another unit)
	36–in (914 mm)	Surface behind servicer is electrically non–conductive (e.g., wood, fiberglass)
	Special	Check for adjacent units or building fresh air intakes within 10–ft of this unit's flue outlet

NOTE: Unit not designed to have overhead obstruction. Contact Application Engineering for guidance on any application planning overhead obstruction or for vertical clearances.

CURBS & WEIGHTS DIMENSIONS - 48HC 04-06 (cont.)

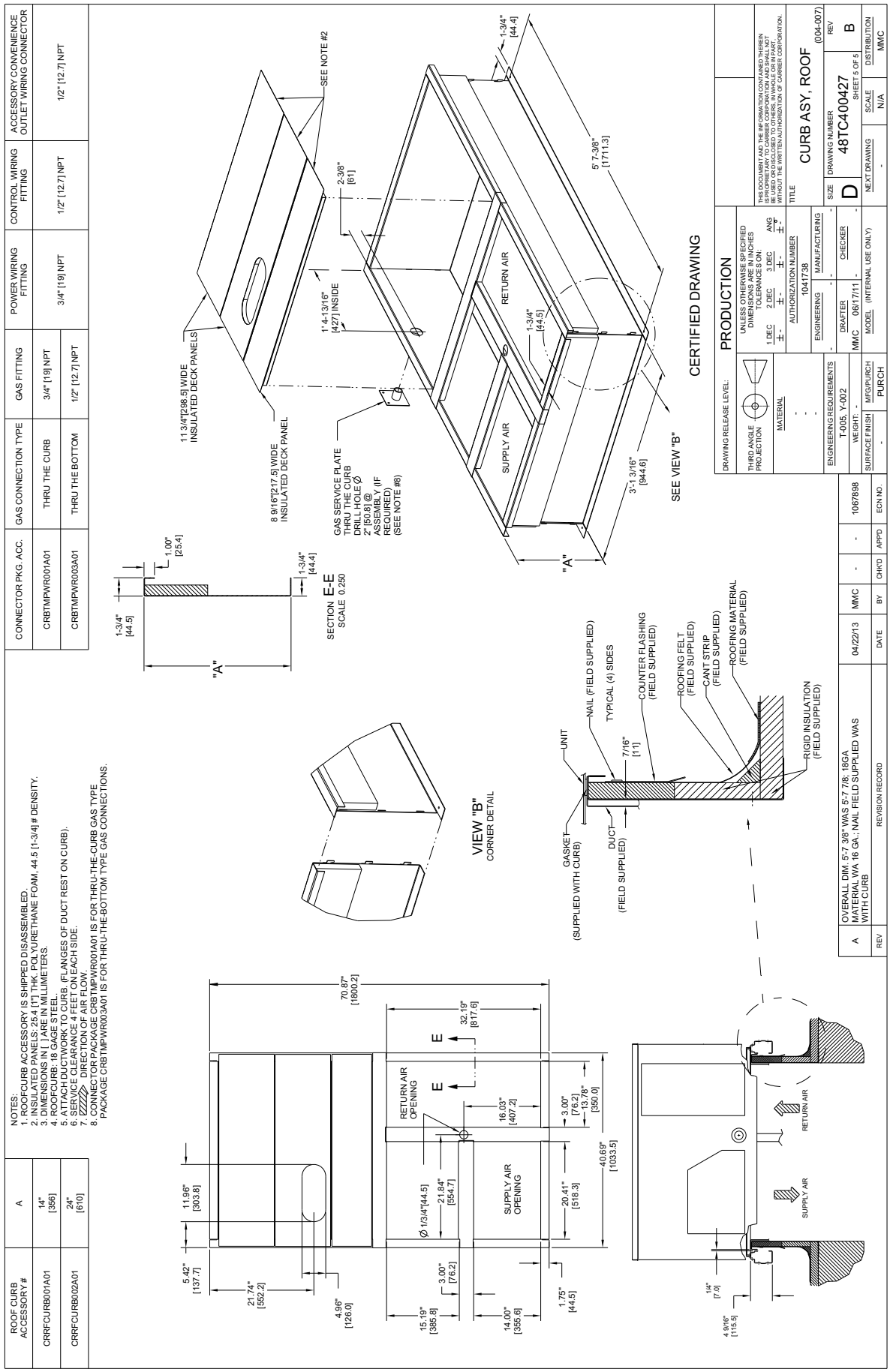

C13310

Fig. 4 - Roof Curb Details

CURBS & WEIGHTS DIMENSIONS - 48HC 07-09

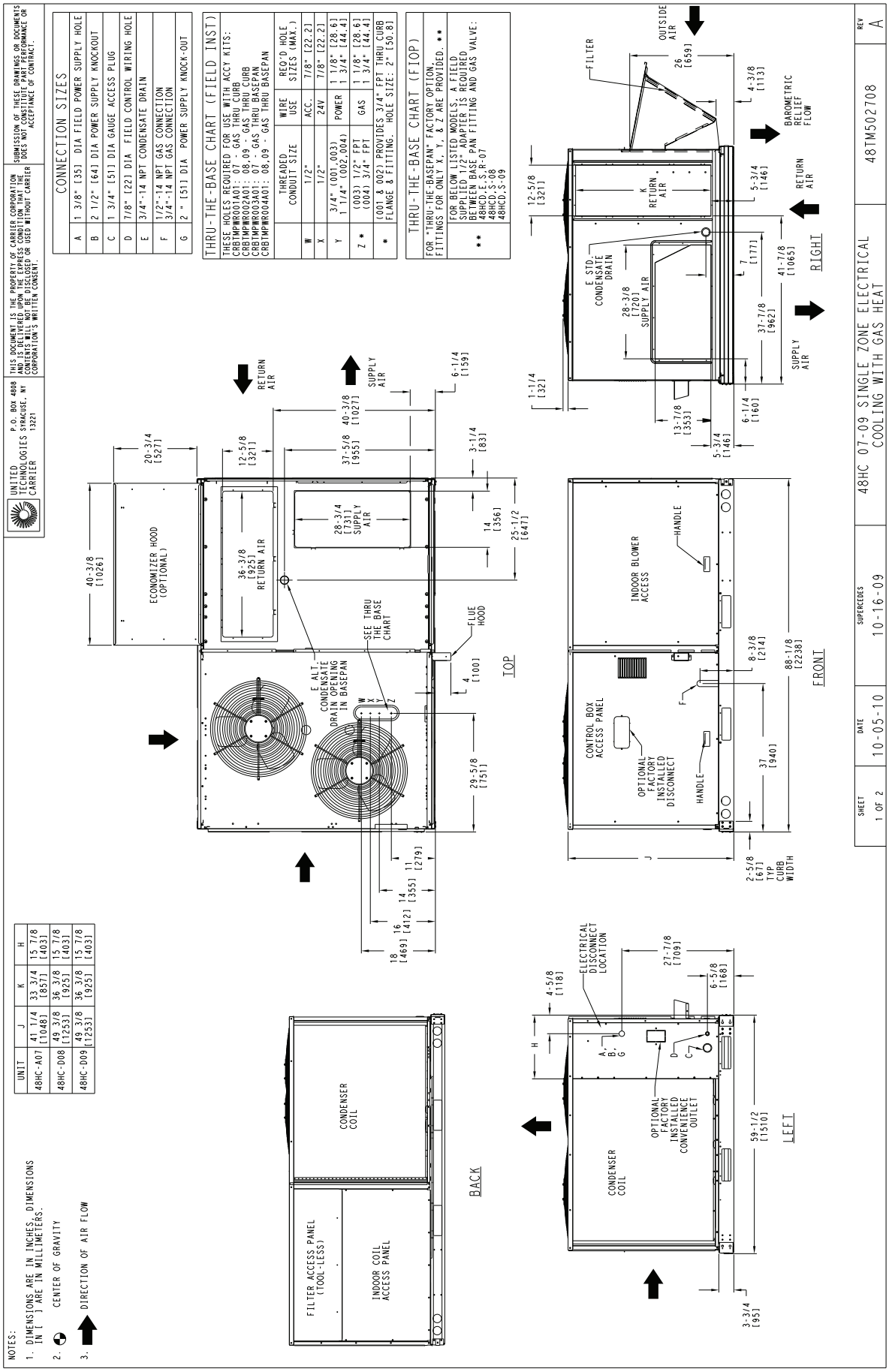

C11322

Fig. 5 - Dimensions 48HC 07-09

CURBS & WEIGHTS DIMENSIONS - 48HC 07-09 (cont.)

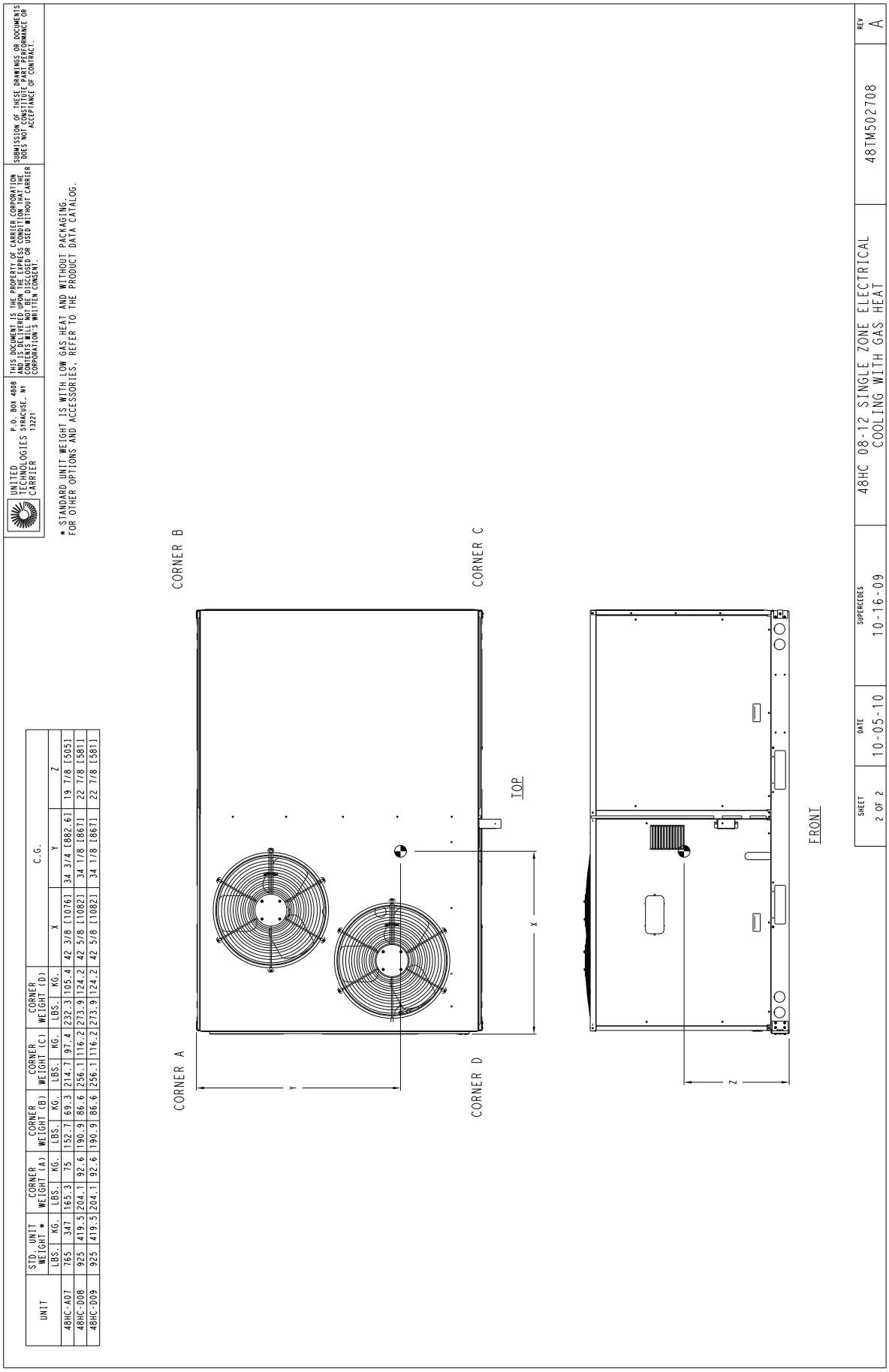

UNIT	STD. UNIT WEIGHT *		CORNER WEIGHT (A)		CORNER WEIGHT (B)		CORNER WEIGHT (C)		CORNER WEIGHT (D)		C.G.		
	LBS.	KG.	LBS.	KG.	LBS.	KG.	LBS.	KG.	LBS.	KG.	X	Y	Z
48HC-A07	765	347	165.3	75	152.7	69.3	214.7	97.4	232.3	105.4	42 3/8 [1076]	34 3/4 [882.6]	19 7/8 [505]
48HC-D08	925	419.5	204.1	92.6	190.9	86.6	256.1	116.2	273.9	124.2	42 5/8 [1082]	34 1/8 [867]	22 7/8 [581]
48HC-D09	925	419.5	204.1	92.6	190.9	86.6	256.1	116.2	273.9	124.2	42 5/8 [1082]	34 1/8 [867]	22 7/8 [581]

C11323

Fig. 6 - Dimensions 48HC 07-09

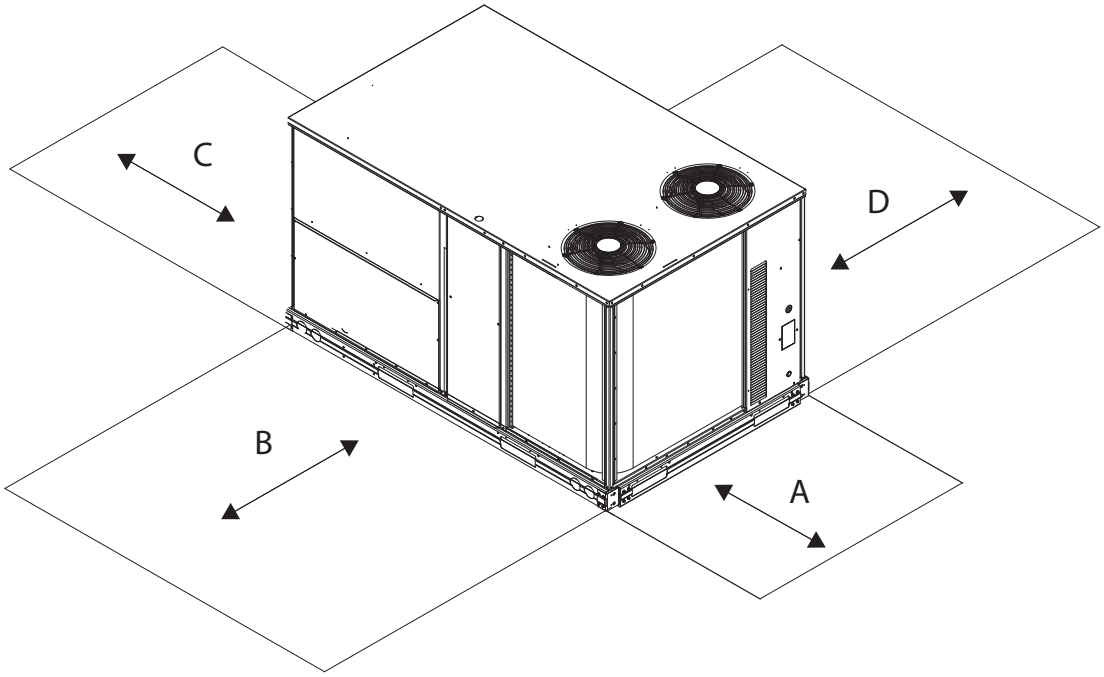

C10577

Fig. 7 - Service Clearance

LOC	DIMENSION	CONDITION
A	48–in (1219 mm)	Unit disconnect is mounted on panel
	18–in (457 mm)	No disconnect, convenience outlet option
	18–in (457 mm)	Recommended service clearance
	12–in (305 mm)	Minimum clearance
B	42–in (1067 mm)	Surface behind servicer is grounded (e.g., metal, masonry wall)
	36–in (914 mm)	Surface behind servicer is electrically non–conductive (e.g., wood, fiberglass)
	Special	Check for sources of flue products within 10–ft of unit fresh air intake hood
C	36–in (914 mm)	Side condensate drain is used
	18–in (457 mm)	Minimum clearance
D	48–in (1219 mm)	No flue discharge accessory installed, surface is combustible material
	42–in (1067 mm)	Surface behind servicer is grounded (e.g., metal, masonry wall, another unit)
	36–in (914 mm)	Surface behind servicer is electrically non–conductive (e.g., wood, fiberglass)
	Special	Check for adjacent units or building fresh air intakes within 10–ft of this unit's flue outlet

NOTE: Unit not designed to have overhead obstruction. Contact Application Engineering for guidance on any application planning overhead obstruction or for vertical clearances.

CURBS & WEIGHTS DIMENSIONS - 48HC 11-12

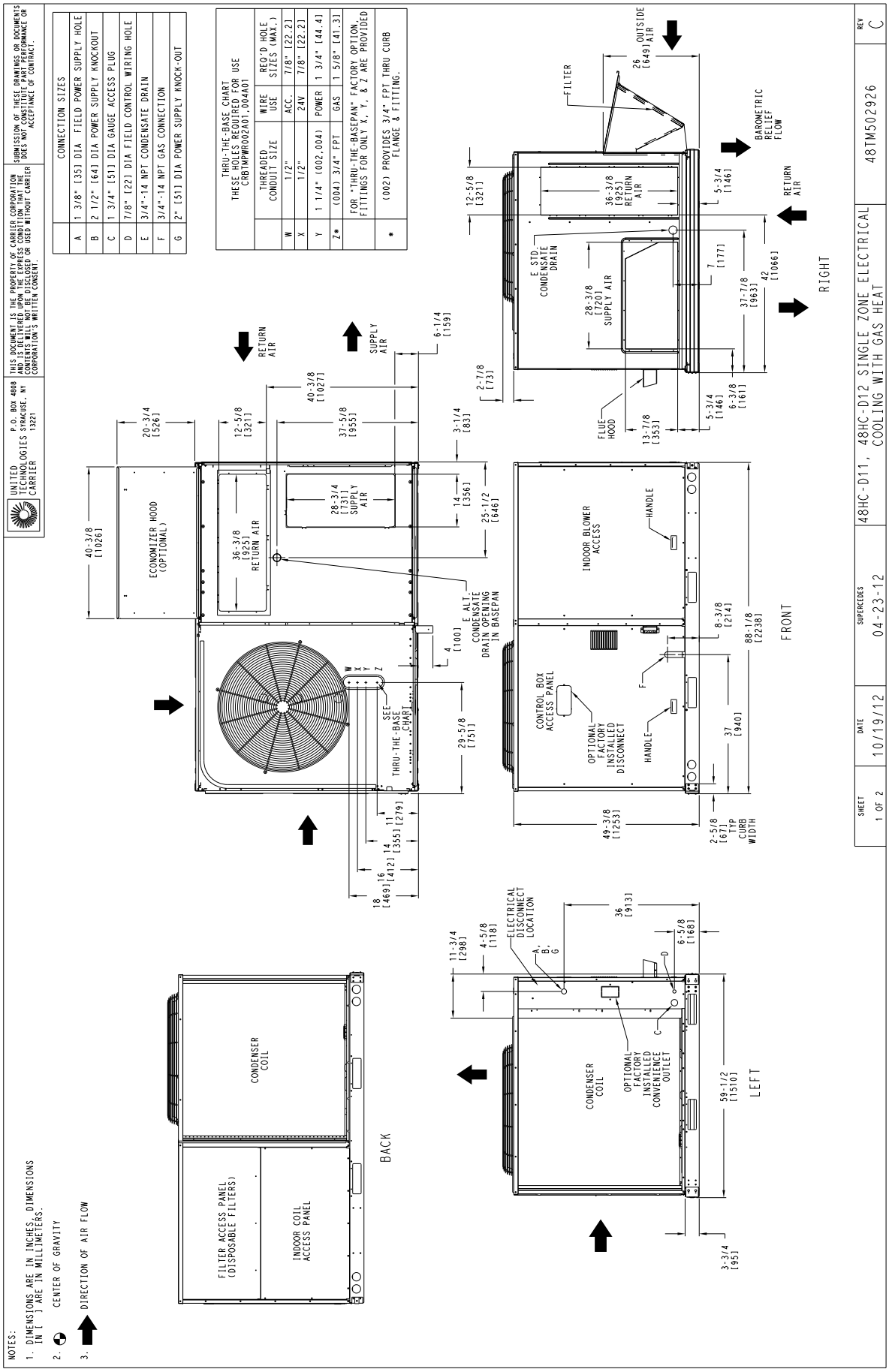

C13293

Fig. 8 - Dimensions 48HC 11-12

CURBS & WEIGHTS DIMENSIONS - 48HC 11-12 (cont.)

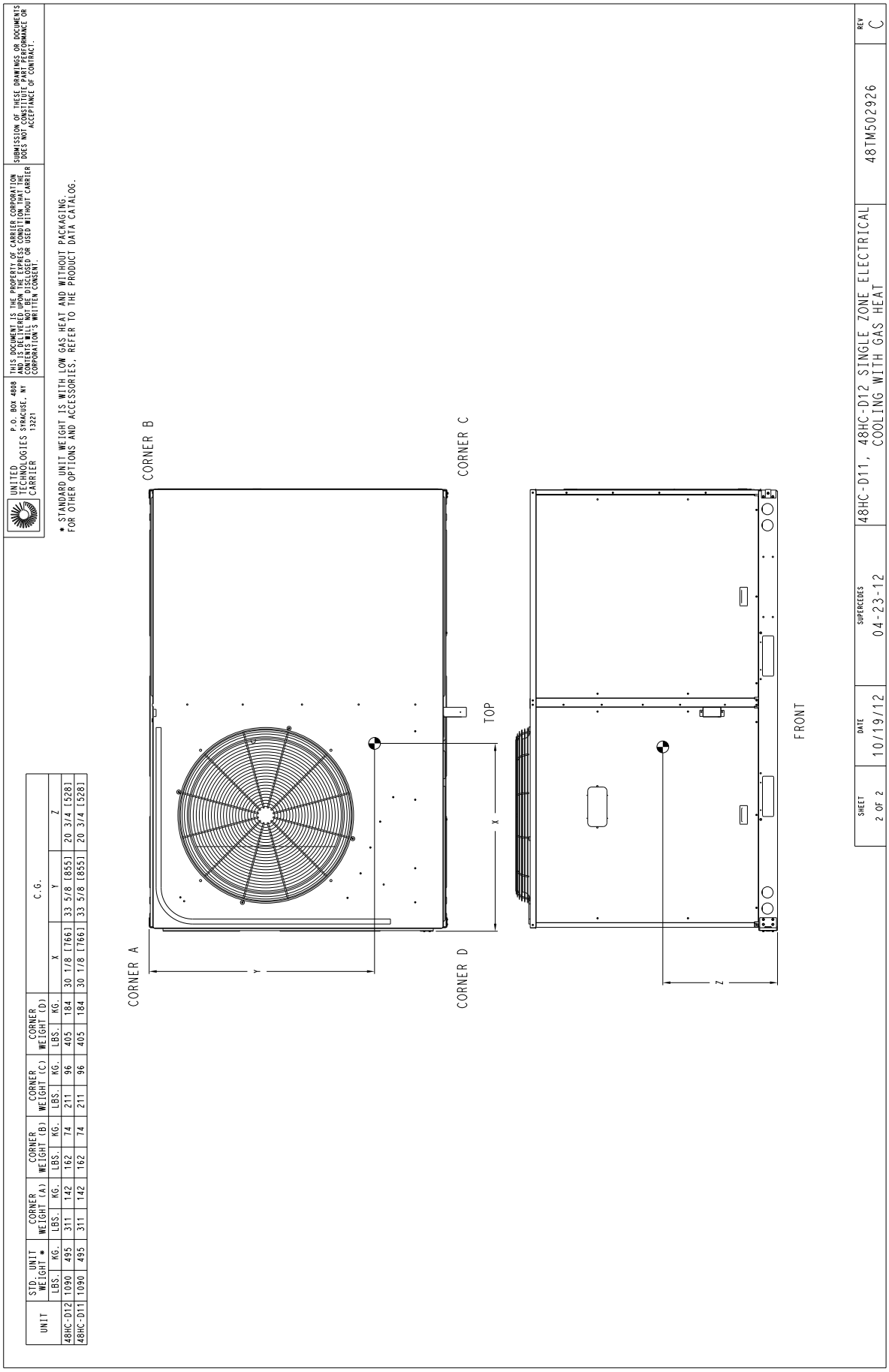

UNIT	STD. UNIT WEIGHT*		CORNER WEIGHT (A)		CORNER WEIGHT (B)		CORNER WEIGHT (C)		CORNER WEIGHT (D)		C.G.		
	LBS.	KG.	LBS.	KG.	LBS.	KG.	LBS.	KG.	LBS.	KG.	X	Y	Z
48HC-D12	1090	495	311	142	162	74	211	96	405	184	30 1/8 [766]	33 5/8 [855]	20 3/4 [528]
48HC-D11	1090	495	311	142	162	74	211	96	405	184	30 1/8 [766]	33 5/8 [855]	20 3/4 [528]

C13294

Fig. 9 - Dimensions 48HC 12

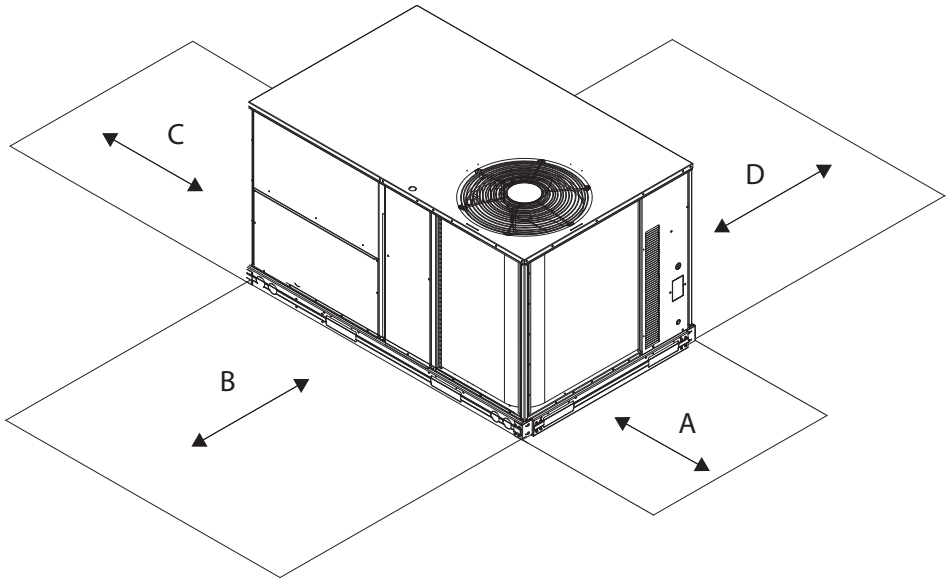

C08337

Fig. 10 - Service Clearance

LOC	DIMENSION	CONDITION
A	48–in (1219 mm)	Unit disconnect is mounted on panel
	18–in (457 mm)	No disconnect, convenience outlet option
	18–in (457 mm)	Recommended service clearance
	12–in (305 mm)	Minimum clearance
B	42–in (1067 mm)	Surface behind servicer is grounded (e.g., metal, masonry wall)
	36–in (914 mm)	Surface behind servicer is electrically non–conductive (e.g., wood, fiberglass)
	Special	Check for sources of flue products within 10–ft of unit fresh air intake hood
C	36–in (914 mm)	Side condensate drain is used
	18–in (457 mm)	Minimum clearance
D	48–in (1219 mm)	No flue discharge accessory installed, surface is combustible material
	42–in (1067 mm)	Surface behind servicer is grounded (e.g., metal, masonry wall, another unit)
	36–in (914 mm)	Surface behind servicer is electrically non–conductive (e.g., wood, fiberglass)
	Special	Check for adjacent units or building fresh air intakes within 10–ft of this unit's flue outlet

NOTE: Unit not designed to have overhead obstruction. Contact Application Engineering for guidance on any application planning overhead obstruction or for vertical clearances.

CURBS & WEIGHTS DIMENSIONS - 48HC 07-12 (cont.)

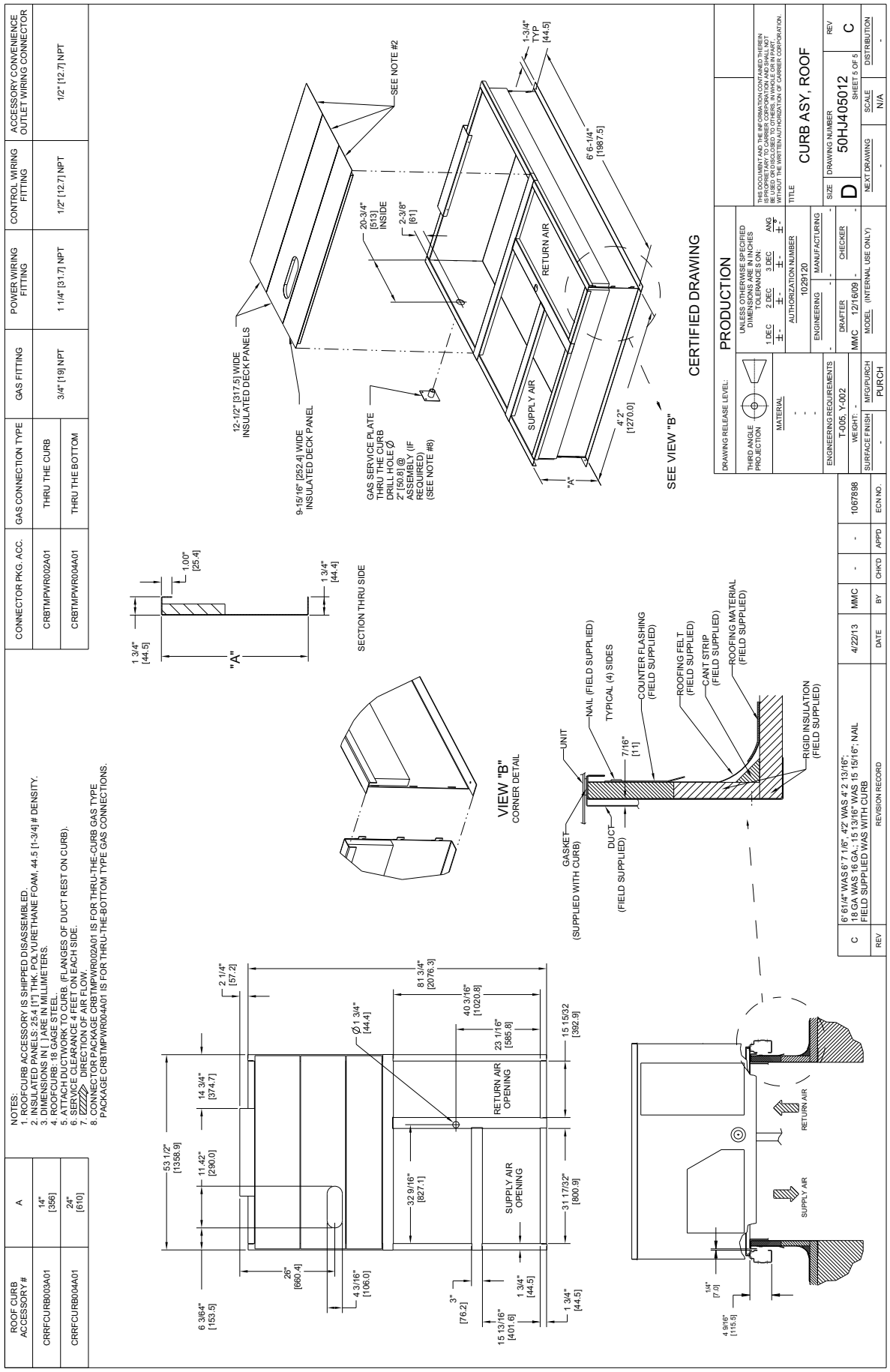

C13311

Fig. 11 - Roof Curb Details

CURBS & WEIGHTS DIMENSIONS - 48HC 14

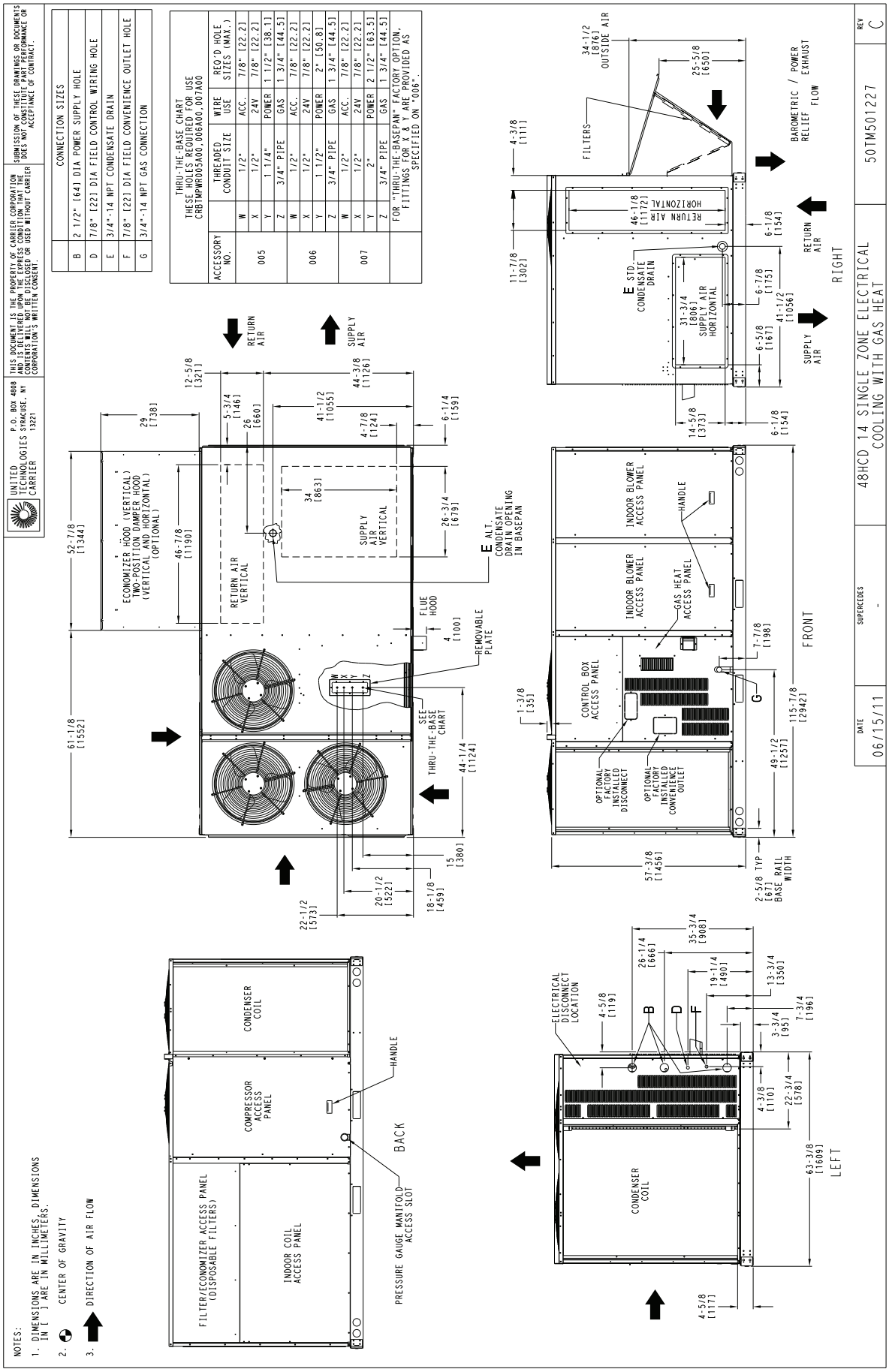

C11326

Fig. 12 - Dimensions 48HC 14

CURBS & WEIGHTS DIMENSIONS - 48HC 14 (cont.)

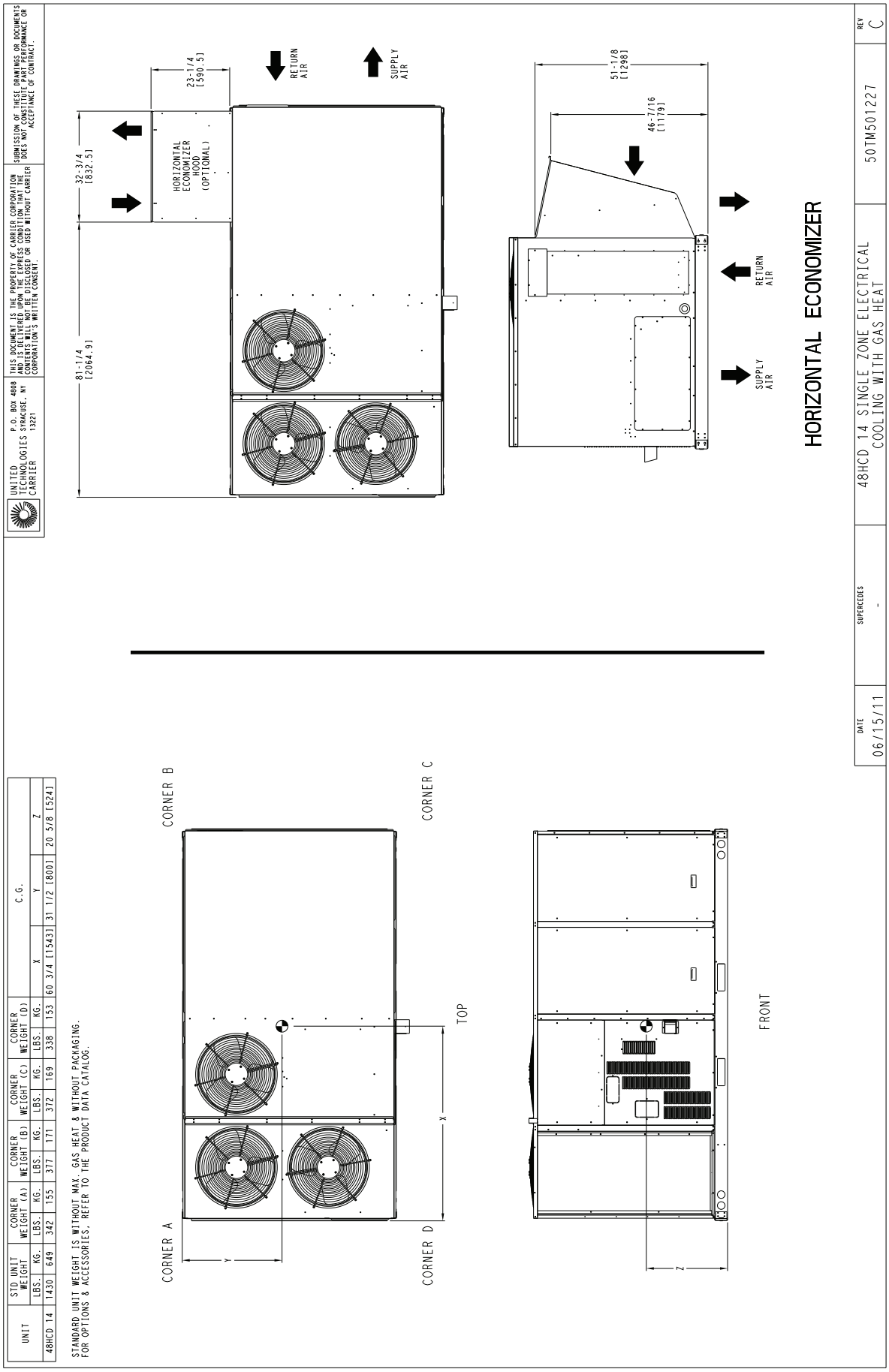

UNIT	STD UNIT WEIGHT		CORNER WEIGHT (A)		CORNER WEIGHT (B)		CORNER WEIGHT (C)		CORNER WEIGHT (D)		C.G.		
	LBS.	KG.	LBS.	KG.	LBS.	KG.	LBS.	KG.	LBS.	KG.	X	Y	Z
48HCD 14	1430	649	342	155	377	171	372	169	338	153	60 3/4 [1543]	31 1/2 [800]	20 5/8 [524]

STANDARD UNIT WEIGHT IS WITHOUT MAX. GAS HEAT & WITHOUT PACKAGING.
FOR OPTIONS & ACCESSORIES, REFER TO THE PRODUCT DATA CATALOG.

C11327

Fig. 13 - Dimensions 48HC 14

CURBS & WEIGHTS DIMENSIONS - 48HC 14 (cont.)

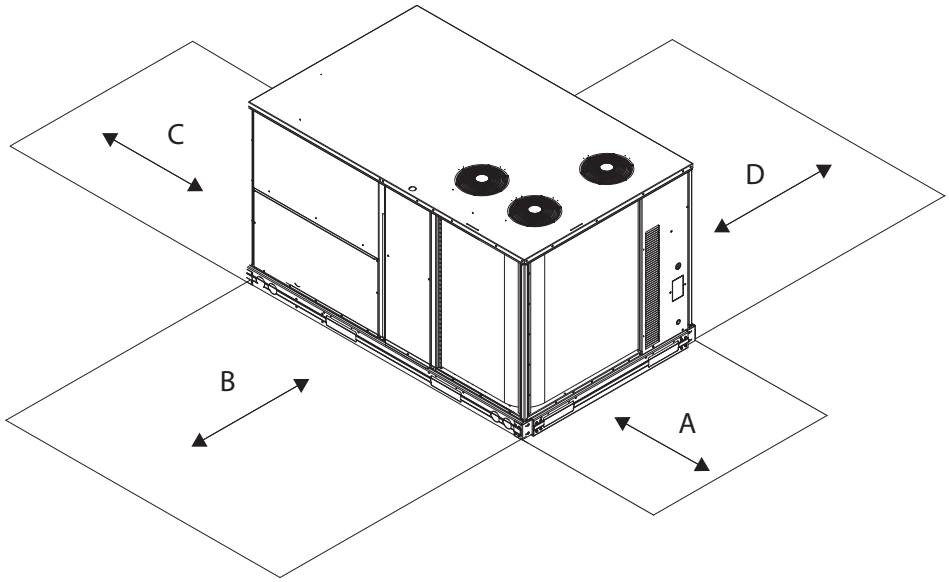

C10578B

Fig. 14 - Service Clearance

LOC	DIMENSION	CONDITION
A	48 – in (1219 mm)	Unit disconnect is mounted on panel
	18 – in (457 mm)	No disconnect, convenience outlet option
	18 – in (457 mm)	Recommended service clearance
	12 – in (305 mm)	Minimum clearance
B	42 – in (1067 mm)	Surface behind servicer is grounded (e.g., metal, masonry wall)
	36 – in (914 mm)	Surface behind servicer is electrically non – conductive (e.g., wood, fiberglass)
	Special	Check for sources of flue products within 10 – ft of unit fresh air intake hood
C	36 – in (914 mm)	Side condensate drain is used
	18 – in (457 mm)	Minimum clearance
D	48 – in (1219 mm)	No flue discharge accessory installed or available, surface is combustible material
	42 – in (1067 mm)	Surface behind servicer is grounded (e.g., metal, masonry wall, another unit)
	36 – in (914 mm)	Surface behind servicer is electrically non – conductive (e.g., wood, fiberglass)
	Special	Check for adjacent units or building fresh air intakes within 10 – ft of this unit's flue outlet

NOTE: Unit not designed to have overhead obstruction. Contact Application Engineering for guidance on any application planning overhead obstruction or for vertical clearances.

CURBS & WEIGHTS DIMENSIONS - 48HC 14 (cont.)

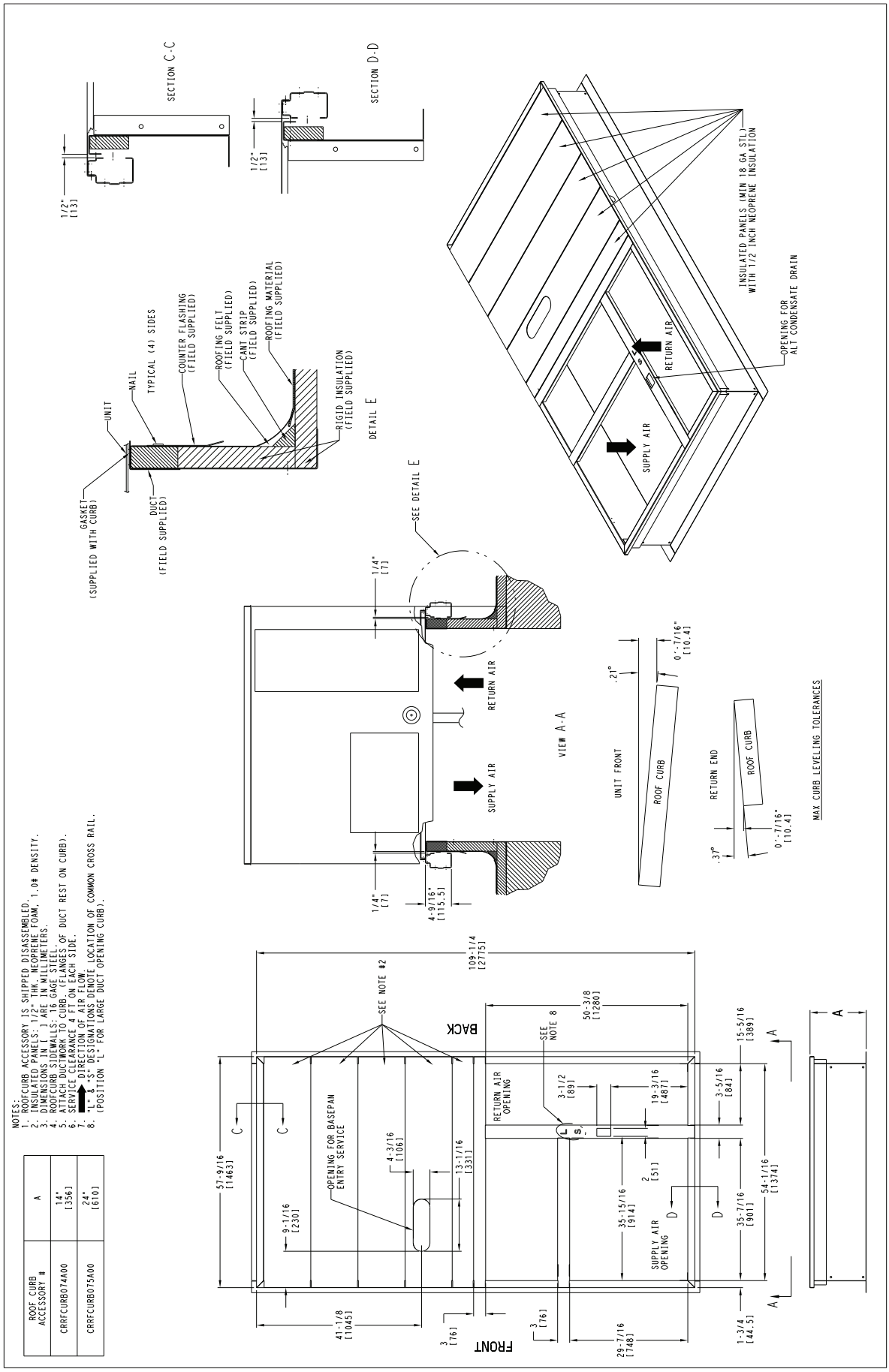

C10772B

Fig. 15 - Roof Curb Details

OPTIONS & ACCESSORY WEIGHTS

OPTION / ACCESSORY	OPTION / ACCESSORY WEIGHTS																	
	04		05		06		07		08		09		11		12		14	
	lb	kg	lb	kg	lb	kg	lb	kg	lb	kg	lb	kg	lb	kg	lb	kg	lb	kg
Humidi–MiZer[1]	50	23	55	25	55	25	80	36	80	36	80	36	85	39	85	39	90	41
Power Exhaust – vertical	50	23	50	23	50	23	75	34	75	34	75	34	75	34	75	34	85	39
Power Exhaust – horizontal	30	14	30	14	30	14	30	14	30	14	30	14	30	14	30	14	75	34
EconoMi$er (X, IV or 2)	50	23	50	23	50	23	75	34	75	34	75	34	75	34	75	34	132	60
Two Position damper	39	18	39	18	39	18	58	26	58	26	58	26	58	26	58	26	65	29
Manual Dampers	12	5	12	5	12	5	18	8	18	8	18	8	18	8	18	8	25	11
Medium Gas Heat	12	5	9	4	9	4	15	7	15	7	15	7	18	8	18	8	18	8
High Gas Heat	–	–	17	8	17	8	29	13	29	13	29	13	35	16	35	16	42	19
Hail Guard (louvered)	16	7	16	7	16	7	34	15	34	15	34	15	34	15	34	15	45	20
Cu/Cu Condenser Coil	35	16	35	16	35	16	95	43	95	43	95	43	170	77	170	77	190	86
Cu/Cu Cond. & Evap. Coils	60	27	60	27	90	41	140	64	140	64	195	88	270	122	270	122	280	127
Roof Curb (14–in. curb)	115	52	115	52	115	52	143	65	143	65	143	65	143	65	143	65	180	82
Roof Curb (24–in. curb)	197	89	197	89	197	89	245	111	245	111	245	111	245	111	245	111	255	116
CO_2 sensor	5	2	5	2	5	2	5	2	5	2	5	2	5	2	5	2	5	2
Flue Discharge Deflector	7	3	7	3	7	3	7	3	7	3	7	3	7	3	7	3	–	–
Optional Indoor Motor/Drive	10	5	10	5	10	5	15	7	15	7	15	7	15	7	15	7	45	20
Motor Master Controller	35	16	35	16	35	16	35	16	35	16	35	16	35	16	35	16	40	18
Low Ambient Controller	5	2	5	2	5	2	5	2	5	2	5	2	8	3	10	5	30	14
Return Smoke Detector	5	2	5	2	5	2	5	2	5	2	5	2	5	2	5	2	5	2
Supply Smoke Detector	5	2	5	2	5	2	5	2	5	2	5	2	5	2	5	2	5	2
Fan/Filter Status Switch	2	1	2	1	2	1	2	1	2	1	2	1	2	1	2	1	2	1
Non–Fused Disconnect	15	7	15	7	15	7	15	7	15	7	15	7	15	7	15	7	15	7
HACR Circuit Breaker	15	7	15	7	15	7	15	7	15	7	15	7	15	7	15	7	15	7
Powered Convenience Outlet	35	16	35	16	35	16	35	16	35	16	35	16	35	16	35	16	35	16
Non–Powered C.O.	5	2	5	2	5	2	5	2	5	2	5	2	5	2	5	2	5	2
Enthalpy Sensor	2	1	2	1	2	1	2	1	2	1	2	1	2	1	2	1	2	1
Differential Enthalpy Sensor	3	1	3	1	3	1	3	1	3	1	3	1	3	1	3	1	3	1
SAV System with VFD	–	–	–	–	–	–	–	–	20	9	20	9	20	9	20	9	20	9

NOTE: Where multiple variations are available, the heaviest combination is listed.
– Not Available
[1] For Humidi–MiZer add MotorMaster Controller.

APPLICATION DATA

Min operating ambient temp (cooling):

In mechanical cooling mode, your Carrier rooftop unit can safely operate down to an outdoor ambient temperature of 35°F (-2°C) and 25°F (-4°C), with an accessory winter start kit. It is possible to provide cooling at lower outdoor ambient temperatures by using less outside air, economizers, and/or accessory low ambient kits.

Max operating ambient temp (cooling):

The maximum operating ambient temperature for cooling mode is 125°F (52°C). While cooling operation above 125°F (52°C) may be possible, it could cause either a reduction in performance, reliability, or a protective action by the unit's internal safety devices.

Min mixed air temp (heating):

Using the factory settings, the minimum temperatures for the mixed air (the combined temperature of the warm return air and the cold outdoor air) entering the dimpled, gas heat exchangers are:

Aluminized	Stainless Steel
50°F (10°C) continuous	40°F (4°C) continuous
45°F (7°C) intermittent	35°F (2°C) intermittent

Operating at lower mixed-air temperatures may be possible, if a field-supplied, outdoor air thermostat initiates both heat stages when the temperature is less than the minimum temperatures listed above. Please contact your local Carrier representative for assistance.

Min and max airflow (heating and cooling):

To maintain safe and reliable operation of your rooftop, operate within the heating airflow limits during heating mode and cooling airflow limits during cooling mode. Operating above the max may cause blow-off, undesired airflow noise, or airflow related problems with the rooftop unit. Operating below the min may cause problems with coil freeze-up and unsafe heating operation. Heating and cooling limitations differ when evaluating operating CFM, the minimum value is the HIGHER of the cooling and heating minimum CFM values published in Table 7 and the maximum value is the LOWER of the cooling and heating minimum values published in Table 7.

Heating-to-cooling changeover:

Your unit will automatically change from heating to cooling mode when using a thermostat with an auto-change-over feature.

Airflow:

All units are draw-though in cooling mode and blow-through in heating mode.

Outdoor air application strategies:

Economizers reduce operating expenses and compressor run time by providing a free source of cooling and a means of ventilation to match application changing needs. In fact, they should be considered for most applications. Also, consider the various economizer control methods and their benefits, as well as sensors required to accomplish your application goals. Please contact your local Carrier representative for assistance.

Motor limits, break horsepower (BHP):

Due to internal design of Carrier units, the air path, and specially designed motors, the full horsepower (maximum continuous BHP) band, as listed in Table 8 and 10, can be used with the utmost confidence. There is no need for extra safety factors, as Carrier motors are designed and rigorously tested to use the entire, listed BHP range without either nuisance tripping or premature motor failure.

Propane heating:

Propane has different physical qualities than natural gas. As a result, Propane requires different fuel to air mixture. To optimize the fuel/air mixture for Propane, Carrier sells different burner orifices in an easy to install accessory kit. To select the correct burner orifices or determine the heat capacity for an Propane application, use either the selection software, or the unit's service manual.

High altitude heating:

High altitudes have less oxygen, which affects the fuel/air mixture in heat exchangers. In order to maintain a proper fuel/air mixture, heat exchangers operating in altitudes above 2000 ft (610 m) require different orifices. To select the correct burner orifices or determine the heat capacity for a high altitude application, use either the selection software, or the unit's service manual.

High altitudes have less oxygen, which means heat exchangers need less fuel. The new gas orifices in this field-installed kit make the necessary adjustment for high altitude applications. They restore the optimal fuel to air mixture and maintain healthy combustion on altitudes above 2000 ft (610 m).

NOTE: Typical natural gas heating value ranges from 975 to 1050 Btu/ft^3 at sea level nationally. The heating value goes down approximately 1.7% per every thousand feet elevation. Standard factory orifices can typically be used up to 2000 ft (610m) elevation without any operational issues.

NOTE: For installations in Canada, the input rating should be derated by 10% for altitudes from 2000 ft (610m) to 4500 ft (1372m) above sea level.

Sizing a rooftop

Bigger isn't necessarily better. While an air conditioner needs to have enough capacity to meet the design loads, it doesn't need excess capacity. In fact, excess capacity typically results in very poor part load performance and humidity control.

Using higher design temperatures than ASHRAE recommends for your location, adding "safety factors" to the calculated load, are all signs of oversizing air conditioners. Oversizing the air conditioner leads to poor humidity control, reduced efficiency, higher utility bills, larger indoor temperature swings, excessive noise, and increased wear and tear on the air conditioner.

Rather than oversizing an air conditioner, engineers should "right-size" or even slightly undersize air conditioners. Correctly sizing an air conditioner controls humidity better; promotes efficiency; reduces utility bills; extends equipment life, and maintains even, comfortable temperatures. Please contact your local Carrier representative for assistance.

Low ambient applications

The optional Carrier economizer can adequately cool your space by bringing in fresh, cool outside air. In fact, when so equipped, accessory low-ambient kit may not be necessary. In low ambient conditions, unless the outdoor air is excessively humid or contaminated, economizer-based "free cooling" is the preferred less costly and energy conscious method.

In low ambient applications where outside air might not be desired (such as contaminated or excessively humid outdoor environments), your Carrier rooftop can operate to ambient temperatures down to -20°F (-29°C) using the recommended field installed accessory Motormaster low ambient controller or 0°F (-18°C) with the factory installed low ambient controller option.

SELECTION PROCEDURE (WITH 48HC*A07 EXAMPLE)[1]

I. Determine cooling and heating loads.

Given:

Mixed air dry bulb	80°F (27°C)
Mixed air wet bulb	67°F (19°C)
Ambient dry bulb	95°F (35°C)
TC_{Load}	73.6 MBH
SHC_{Load}	53.3 MBH
Vertical supply air	2100 CFM
Heating load	85.0 MBH
External static pressure	0.67 in. wg
Electrical characteristics	230-3-60

II. Make an initial guess at cooling tons.

Refrig. tons = TC_{Load} / 12 MBH per ton
Refrig. tons = 72.0 / 12 = 6.0 tons
In this case, start by looking at the 48HC**07.

III. Look up the rooftop's TC and SHC.

Table 18 shows that, at the application's supply air CFM, mixed air and ambient temperatures, the 48HC*A07 supplies:
TC = 73.6 MBH[2]
SHC = 53.3 MBH[2]

IV. Calculate the building latent heat load.

$LC_{Load} = TC_{Load} - SHC_{Load}$
LC_{Load} = 72.0 MBH - 54.0 MBH = 18.0 MBH

V. Calculate RTU latent heat capacity.

LC = TC - SHC
LC = 73.6 MBH - 53.3 MBH = 20.3 MBH

VI. Compare RTU capacities to loads.[3]

Compare the rooftop's SHC and LC to the building's sensible and latent heat loads.

VII. Select factory options (FIOP)

Local code requires an economizer for any unit with TC greater than 65.0 MBH.

VIII. Calculate the total static pressure.

External static pressure	0.67 in. wg
Sum of FIOP / Accessory static	+0.13 in. wg
Total Static Pressure	0.80 in. wg

IX. Look up the indoor fan RPM & BHP.

Table 43 shows, at 2100 CFM & ESP= 0.8,
RPM = 712 & BHP = 1.17

X. Convert BHP (Step VIII) into fan motor heat.

Fan motor heat = 2.546* BHP/Motor Eff.[4]
Fan motor heat = 3.7 MBH

XI. Calculate RTU heating capacity.

Building heating load	85.0 MBH
Fan motor heat	-3.7 MBH
Required heating capacity	81.3 MBH

XII. Select a gas heater.

Table 4 shows the heating capacities of the 48HCEA07 = 103.0 MBH. Select the 48HCEA07

XIII. Determine electrical requirements.

MCA/MOCP tables show the MCA and Breaker Size of a 48HC*A07 (without convenience outlet) as:
MCA = 32.0 amps & MOCP = 50.0 amps
Min. disconnect size: FLA = 31.0 & LRA = 148.

Legend

BHP	—	Break horsepower
FLA	—	Full load amps
LC	—	Latent capacity
LRA	—	Lock rotor amp
MBH	—	(1,000) BTUH
MCA	—	Min. circuit ampacity
MOCP	—	Max. over–current protection
RPM	—	Revolutions per minute
RTU	—	Rooftop unit
SHC	—	Sensible heat capacity
TC	—	Total capacity

NOTES:

1. Selection software by Carrier saves time by performing many of the steps above. Contact your Carrier sales representative for assistance.
2. Unit ratings are gross capacities and do not include the effect of evaporator fan motor heat. See Step XI. for determining amount of evaporator fan motor heat to subtract from total and sensible capacities to obtain net cooling and net sensible capacities.
3. Selecting a unit with a SHC slightly lower than the SHC_{Load} is often better than oversizing. Slightly lower SHC's will help control indoor humidity, and prevent temperature swings.
4. Indoor fan motor efficiency is available in Table NO TAG. Use the decimal form in the equation, eg. 80% = .8.

Table 12 – COOLING CAPACITIES 1-STAGE COOLING 3 TONS

48HC*A04				AMBIENT TEMPERATURE														
				85			95			105			115			125		
				EA (dB)			EA (dB)			EA (dB)			EA (dB)			EA (dB)		
				75	80	85	75	80	85	75	80	85	75	80	85	75	80	85
900 Cfm	EA (wb)	58	TC	32.1	32.1	36.3	30.8	30.8	34.9	29.4	29.4	33.4	28.0	28.0	31.7	26.3	26.3	29.8
			SHC	27.8	32.1	36.3	26.7	30.8	34.9	25.5	29.4	33.4	24.2	28.0	31.7	22.8	26.3	29.8
		62	TC	34.0	34.0	34.3	32.3	32.3	33.5	30.6	30.6	32.6	28.7	28.7	31.7	26.6	26.6	30.6
			SHC	25.0	29.7	34.3	24.2	28.9	33.5	23.4	28.0	32.6	22.5	27.1	31.7	21.5	26.0	30.6
		67	TC	37.3	37.3	37.3	35.5	35.5	35.5	33.6	33.6	33.6	31.5	31.5	31.5	29.2	29.2	29.2
			SHC	20.7	25.4	30.0	20.0	24.6	29.3	19.2	23.8	28.4	18.3	22.9	27.6	17.4	22.0	26.6
		72	TC	40.8	40.8	40.8	38.9	38.9	38.9	36.9	36.9	36.9	34.6	34.6	34.6	32.2	32.2	32.2
			SHC	16.3	21.0	25.7	15.6	20.3	25.0	14.8	19.5	24.1	13.9	18.6	23.3	13.0	17.7	22.3
		76	TC	–	43.9	43.9	–	41.8	41.8	–	39.6	39.6	–	37.2	37.2	–	34.6	34.6
			SHC	–	17.4	22.4	–	16.7	21.7	–	15.9	20.8	–	15.1	19.9	–	14.2	19.0
1050 Cfm	EA (wb)	58	TC	33.8	33.8	38.4	32.5	32.5	36.8	31.0	31.0	35.1	29.4	29.4	33.3	27.6	27.6	31.3
			SHC	29.3	33.8	38.4	28.1	32.5	36.8	26.9	31.0	35.1	25.5	29.4	33.3	23.9	27.6	31.3
		62	TC	35.1	35.1	37.5	33.3	33.3	36.6	31.5	31.5	35.7	29.6	29.6	34.5	27.7	27.7	32.6
			SHC	26.9	32.2	37.5	26.0	31.3	36.6	25.1	30.4	35.7	24.1	29.3	34.5	22.7	27.7	32.6
		67	TC	38.4	38.4	38.4	36.5	36.5	36.5	34.5	34.5	34.5	32.3	32.3	32.3	29.9	29.9	29.9
			SHC	22.0	27.3	32.7	21.2	26.5	31.9	20.3	25.7	31.0	19.4	24.8	30.1	18.5	23.8	29.1
		72	TC	42.0	42.0	42.0	40.0	40.0	40.0	37.8	37.8	37.8	35.5	35.5	35.5	32.9	32.9	32.9
			SHC	16.9	22.3	27.6	16.1	21.5	26.9	15.3	20.7	26.0	14.4	19.8	25.1	13.5	18.8	24.2
		76	TC	–	45.0	45.0	–	42.9	42.9	–	40.6	40.6	–	38.0	38.0	–	35.3	35.3
			SHC	–	18.1	23.8	–	17.4	23.0	–	16.6	22.2	–	15.7	21.3	–	14.8	20.3
1200 Cfm	EA (wb)	58	TC	35.3	35.3	40.0	33.9	33.9	38.4	32.3	32.3	36.6	30.6	30.6	34.7	28.7	28.7	32.5
			SHC	30.6	35.3	40.0	29.4	33.9	38.4	28.0	32.3	36.6	26.5	30.6	34.7	24.9	28.7	32.5
		62	TC	35.9	35.9	40.5	34.2	34.2	39.4	32.4	32.4	38.1	30.6	30.6	36.1	28.7	28.7	33.9
			SHC	28.6	34.5	40.5	27.7	33.6	39.4	26.6	32.4	38.1	25.2	30.6	36.1	23.6	28.7	33.9
		67	TC	39.3	39.3	39.3	37.3	37.3	37.3	35.2	35.2	35.2	32.9	32.9	32.9	30.5	30.5	31.6
			SHC	23.1	29.1	35.2	22.3	28.3	34.4	21.4	27.5	33.5	20.5	26.6	32.6	19.5	25.6	31.6
		72	TC	42.9	42.9	42.9	40.8	40.8	40.8	38.5	38.5	38.5	36.1	36.1	36.1	33.4	33.4	33.4
			SHC	17.3	23.4	29.5	16.6	22.6	28.7	15.7	21.8	27.9	14.8	20.9	27.0	13.9	19.9	26.0
		76	TC	–	45.9	45.9	–	43.7	43.7	–	41.3	41.3	–	38.7	38.7	–	35.9	35.9
			SHC	–	18.8	25.1	–	18.0	24.3	–	17.2	23.4	–	16.3	22.5	–	15.4	21.5
1350 Cfm	EA (wb)	58	TC	36.6	36.6	41.5	35.1	35.1	39.7	33.4	33.4	37.9	31.6	31.6	35.8	29.6	29.6	33.6
			SHC	31.7	36.6	41.5	30.4	35.1	39.7	28.9	33.4	37.9	27.4	31.6	35.8	25.7	29.6	33.6
		62	TC	36.7	36.7	43.2	35.1	35.1	41.3	33.4	33.4	39.4	31.6	31.6	37.3	29.6	29.6	34.9
			SHC	30.2	36.7	43.2	28.8	35.1	41.3	27.5	33.4	39.4	26.0	31.6	37.3	24.4	29.6	34.9
		67	TC	39.9	39.9	39.9	37.9	37.9	37.9	35.8	35.8	35.9	33.4	33.4	34.9	30.9	30.9	33.9
			SHC	24.2	30.9	37.6	23.4	30.1	36.8	22.5	29.2	35.9	21.6	28.3	34.9	20.6	27.2	33.9
		72	TC	43.6	43.6	43.6	41.4	41.4	41.4	39.1	39.1	39.1	36.6	36.6	36.6	33.9	33.9	33.9
			SHC	17.8	24.5	31.3	17.0	23.7	30.5	16.1	22.9	29.6	15.2	22.0	28.7	14.3	21.0	27.7
		78	TC	–	46.7	46.7	–	44.4	44.4	–	41.9	41.9	–	39.2	39.2	–	36.3	36.3
			SHC	–	19.4	26.3	–	18.6	25.5	–	17.8	24.6	–	16.9	23.7	–	15.9	22.7
1500 Cfm	EA (wb)	58	TC	37.7	37.7	42.7	36.1	36.1	40.9	34.3	34.3	38.9	32.5	32.5	36.8	30.4	30.4	34.4
			SHC	32.6	37.7	42.7	31.3	36.1	40.9	29.8	34.3	38.9	28.1	32.5	36.8	26.3	30.4	34.4
		62	TC	37.7	37.7	44.4	36.1	36.1	42.5	34.4	34.4	40.5	32.5	32.5	38.3	30.4	30.4	35.8
			SHC	31.0	37.7	44.4	29.7	36.1	42.5	28.3	34.4	40.5	26.7	32.5	38.3	25.0	30.4	35.8
		67	TC	40.5	40.5	40.5	38.4	38.4	39.1	36.2	36.2	38.2	33.8	33.8	37.2	31.2	31.2	36.1
			SHC	25.2	32.6	40.0	24.4	31.7	39.1	23.5	30.8	38.2	22.5	29.9	37.2	21.5	28.8	36.1
		72	TC	44.2	44.2	44.2	41.9	41.9	41.9	39.6	39.6	39.6	37.0	37.0	37.0	34.2	34.2	34.2
			SHC	18.2	25.6	33.0	17.4	24.8	32.2	16.5	23.9	31.3	15.6	23.0	30.4	14.7	22.0	29.4
		76	TC	–	47.2	47.2	–	44.9	44.9	–	42.3	42.3	–	39.6	39.6	–	36.7	36.7
			SHC	–	19.9	27.5	–	19.1	26.7	–	18.3	25.8	–	17.4	24.9	–	16.4	23.9

LEGEND:

– – Do not operate
Cfm – Cubic feet per minute (supply air)
EAT(db) – Entering air temperature (dry bulb)
EAT(wb) – Entering air temperature (wet bulb)
SHC – Sensible heat capacity
TC – Total capacity

48HC04 (3 TONS) – UNIT WITH HUMIDI–MIZER SYSTEM IN SUBCOOLING MODE										
Temp (F) Air Entering Condenser (Edb)		AIR ENTERING EVAPORATOR – CFM								
		900			1200			1500		
		Air Entering Evaporator – Ewb (F)								
		72	67	62	72	67	62	72	67	62
75	TC	44.6	40.3	36.5	47.0	43.0	39.1	48.8	44.3	40.8
	SHC	19.8	24.5	29.3	22.6	29.1	35.3	25.4	33.0	40.4
	kW	2.02	1.97	1.93	1.96	2.00	2.05	2.08	2.02	1.98
85	TC	42.1	38.1	34.4	44.6	40.5	36.9	46.1	41.9	38.6
	SHC	17.5	22.5	27.4	20.4	26.8	33.2	22.9	30.8	38.2
	kW	2.28	2.23	2.19	2.22	2.26	2.31	2.33	2.28	2.24
95	TC	39.6	35.8	32.3	41.9	38.0	34.5	43.2	39.3	36.2
	SHC	15.2	20.3	25.5	17.8	24.5	31.1	20.2	28.4	35.9
	kW	2.56	2.51	2.47	2.50	2.54	2.60	2.62	2.56	2.52
105	TC	36.8	33.2	30.0	38.9	35.3	32.0	40.2	36.5	33.6
	SHC	12.7	18.1	23.4	15.1	22.0	28.8	17.5	25.8	33.6
	kW	2.88	2.83	2.79	2.82	2.86	2.91	2.93	2.88	2.84
115	TC	33.9	30.5	27.5	35.8	32.4	29.4	37.0	33.5	30.9
	SHC	10.1	15.7	21.2	12.3	19.5	26.4	14.5	23.1	30.9
	kW	3.23	3.19	3.15	3.17	3.21	3.26	3.28	3.23	3.19
125	TC	30.8	27.7	24.9	32.5	29.3	26.5	33.5	30.3	27.9
	SHC	7.3	13.1	18.9	9.4	16.7	23.9	11.4	20.3	27.9
	kW	3.62	3.59	3.56	3.57	3.60	3.65	3.66	3.62	3.59

48HC04 (3 TONS) – UNIT WITH HUMIDI–MIZER SYSTEM IN HOT GAS REHEAT MODE										
Temp (F) Air Entering Condenser (Edb)		AIR ENTERING EVAPORATOR - Ewb (F)								
		75 Dry Bulb			75 Dry Bulb			75 Dry Bulb		
		62.5 Wet Bulb			64 Wet Bulb			65.3 Wet Bulb		
		(50% Relative)			(56% Relative)			(60% Relative)		
		Air Entering Evaporator - Cfm								
		900	1200	1500	900	1200	1500	900	1200	1500
80	TC	16.46	17.15	17.74	16.66	17.23	17.79	16.85	17.74	18.29
	SHC	5.10	6.60	8.15	3.21	4.33	5.61	1.59	2.75	3.83
	kW	1.94	2.01	2.02	2.04	2.13	2.15	2.12	2.14	2.16
75	TC	16.61	17.52	18.09	17.18	18.09	18.67	17.69	18.61	19.19
	SHC	5.24	6.96	8.48	3.71	5.15	6.45	2.40	3.59	4.69
	kW	1.98	2.00	2.01	1.99	2.01	2.02	2.00	2.02	2.03
70	TC	17.00	18.06	18.63	17.56	18.46	19.40	18.41	19.35	20.10
	SHC	5.62	7.47	9.00	4.08	5.50	7.16	3.09	4.31	5.58
	kW	1.96	1.94	1.96	1.97	2.00	1.94	1.91	1.94	1.92
60	TC	17.63	18.49	19.37	18.17	19.38	19.95	18.66	19.52	20.46
	SHC	6.21	7.89	9.71	4.66	6.39	7.68	3.31	4.45	5.90
	kW	1.93	1.96	1.92	1.95	1.92	1.94	1.97	2.00	1.96
50	TC	17.82	18.59	19.72	18.31	19.73	20.26	18.76	20.21	20.73
	SHC	6.40	7.99	10.05	4.79	6.71	7.97	3.40	5.11	6.16
	kW	1.98	2.03	1.94	2.01	1.94	1.97	2.03	1.96	1.99
40	TC	17.70	19.38	19.85	19.10	20.30	20.34	19.53	20.76	21.26
	SHC	6.30	8.74	10.17	5.54	7.26	8.05	4.13	5.64	6.67
	kW	2.07	1.95	1.99	1.93	1.91	2.02	1.96	1.94	1.97

LEGEND

Edb – Entering Dry–Bulb
Ewb – Entering Wet–Bulb
kW – Compressor Motor Power Input
Idb – Leaving Dry–Bulb
Iwb – Leaving Wet–Bulb
SHC – Sensible Heat Capacity (1000 Btuh) Gross
TC – Total Capacity (1000 Btuh) Gross

NOTES:

1. Direct interpolation is permissible. Do not extrapolate.
2. The following formulas may be used:

$$t_{ldb} = t_{edb} - \frac{\text{sensible capacity (Btuh)}}{1.10 \times \text{cfm}}$$

t_{lwb} = Wet–bulb temperature corresponding to enthalpy of air leaving evaporator coil (h_{lwb})

$$h_{lwb} = h_{ewb} - \frac{\text{total capacity (Btuh)}}{4.5 \times \text{cfm}}$$

Where: h_{ewb} = Enthalpy of air entering evaporator coil

Table 14 – COOLING CAPACITIES 1-STAGE COOLING 4 TONS

48HC*A05				AMBIENT TEMPERATURE														
				85			95			105			115			125		
				EA (dB)			EA (dB)			EA (dB)			EA (dB)			EA (dB)		
				75	80	85	75	80	85	75	80	85	75	80	85	75	80	85
1200 Cfm	EA (wb)	58	TC	43.2	43.2	49.1	41.5	41.5	47.2	39.7	39.7	45.1	37.7	37.7	42.9	35.6	35.6	40.4
			SHC	37.3	43.2	49.1	35.9	41.5	47.2	34.3	39.7	45.1	32.6	37.7	42.9	30.7	35.6	40.4
		62	TC	45.9	45.9	46.0	43.7	43.7	45.0	41.3	41.3	43.8	38.8	38.8	42.6	36.0	36.0	41.2
			SHC	33.5	39.8	46.0	32.5	38.7	45.0	31.3	37.6	43.8	30.1	36.3	42.6	28.8	35.0	41.2
		67	TC	50.5	50.5	50.5	48.0	48.0	48.0	45.4	45.4	45.4	42.6	42.6	42.6	39.6	39.6	39.6
			SHC	27.9	34.1	40.4	26.8	33.1	39.4	25.7	32.0	38.2	24.5	30.8	37.1	23.2	29.5	35.8
		72	TC	55.4	55.4	55.4	52.7	52.7	52.7	49.9	49.9	49.9	46.8	46.8	46.8	43.5	43.5	43.5
			SHC	22.0	28.4	34.7	21.0	27.3	33.7	19.9	26.2	32.5	18.7	25.0	31.3	17.4	23.8	30.1
		76	TC	–	59.7	59.7	–	56.8	56.8	–	53.7	53.7	–	50.4	50.4	–	46.8	46.8
			SHC	–	23.6	30.2	–	22.6	29.2	–	21.5	28.1	–	20.3	26.8	–	19.1	25.5
1400 Cfm	EA (wb)	58	TC	45.6	45.6	51.9	43.8	43.8	49.8	41.9	41.9	47.6	39.7	39.7	45.1	37.3	37.3	42.4
			SHC	39.4	45.6	51.9	37.9	43.8	49.8	36.2	41.9	47.6	34.3	39.7	45.1	32.3	37.3	42.4
		62	TC	47.4	47.4	50.5	45.1	45.1	49.3	42.6	42.6	48.0	40.0	40.0	46.5	37.4	37.4	44.2
			SHC	36.0	43.2	50.5	34.9	42.1	49.3	33.7	40.9	48.0	32.4	39.5	46.5	30.6	37.4	44.2
		67	TC	52.1	52.1	52.1	49.5	49.5	49.5	46.7	46.7	46.7	43.7	43.7	43.7	40.5	40.5	40.5
			SHC	29.5	36.8	44.0	28.4	35.7	42.9	27.3	34.5	41.8	26.0	33.3	40.5	24.7	32.0	39.2
		72	TC	57.1	57.1	57.1	54.3	54.3	54.3	51.2	51.2	51.2	48.0	48.0	48.0	44.5	44.5	44.5
			SHC	22.8	30.1	37.4	21.7	29.0	36.3	20.5	27.8	35.1	19.3	26.6	33.9	18.0	25.3	32.6
		76	TC	–	61.4	61.4	–	58.3	58.3	–	55.1	55.1	–	51.6	51.6	–	47.8	47.8
			SHC	–	24.6	32.2	–	23.5	31.1	–	22.4	29.9	–	21.2	28.7	–	19.9	27.4
1600 Cfm	EA (wb)	58	TC	47.7	47.7	54.2	45.8	45.8	52.0	43.7	43.7	49.6	41.3	41.3	47.0	38.8	38.8	44.1
			SHC	41.2	47.7	54.2	39.5	45.8	52.0	37.7	43.7	49.6	35.7	41.3	47.0	33.5	38.8	44.1
		62	TC	48.7	48.7	54.5	46.3	46.3	53.2	43.7	43.7	51.7	41.4	41.4	48.9	38.8	38.8	45.9
			SHC	38.3	46.4	54.5	37.1	45.2	53.2	35.8	43.7	51.7	33.9	41.4	48.9	31.8	38.8	45.9
		67	TC	53.3	53.3	53.3	50.6	50.6	50.6	47.7	47.7	47.7	44.6	44.6	44.6	41.2	41.2	42.6
			SHC	31.0	39.2	47.5	29.9	38.1	46.3	28.7	37.0	45.2	27.5	35.7	43.9	26.2	34.4	42.6
		72	TC	58.4	58.4	58.4	55.4	55.4	55.4	52.3	52.3	52.3	48.9	48.9	48.9	45.2	45.2	45.2
			SHC	23.4	31.7	39.9	22.3	30.6	38.8	21.1	29.4	37.6	19.9	28.2	36.4	18.6	26.8	35.1
		76	TC	–	62.7	62.7	–	59.5	59.5	–	56.1	56.1	–	52.5	52.5	–	48.6	48.6
			SHC	–	25.5	34.0	–	24.4	32.9	–	23.2	31.7	–	22.0	30.4	–	20.7	29.1
1800 Cfm	EA (wb)	58	TC	49.5	49.5	56.2	47.4	47.4	53.9	45.2	45.2	51.3	42.7	42.7	48.5	40.1	40.1	45.5
			SHC	42.8	49.5	56.2	41.0	47.4	53.9	39.0	45.2	51.3	36.9	42.7	48.5	34.6	40.1	45.5
		62	TC	49.8	49.8	58.1	47.5	47.5	56.1	45.2	45.2	53.4	42.8	42.8	50.5	40.1	40.1	47.4
			SHC	40.4	49.2	58.1	38.8	47.5	56.1	37.0	45.2	53.4	35.0	42.8	50.5	32.8	40.1	47.4
		67	TC	54.3	54.3	54.3	51.5	51.5	51.5	48.5	48.5	48.5	45.3	45.3	47.1	41.8	41.8	45.7
			SHC	32.5	41.7	50.8	31.4	40.5	49.7	30.2	39.3	48.5	28.9	38.0	47.1	27.5	36.6	45.7
		72	TC	59.4	59.4	59.4	56.3	56.3	56.3	53.1	53.1	53.1	49.6	49.6	49.6	45.8	45.8	45.8
			SHC	24.0	33.2	42.4	22.9	32.1	41.3	21.7	30.9	40.1	20.4	29.6	38.8	19.1	28.3	37.5
		76	TC	–	63.8	63.8	–	60.5	60.5	–	57.0	57.0	–	53.2	53.2	–	49.2	49.2
			SHC	–	26.3	35.8	–	25.2	34.6	–	24.0	33.4	–	22.8	32.1	–	21.5	30.8
2000 Cfm	EA (wb)	58	TC	51.0	51.0	58.0	48.8	48.8	55.5	46.5	46.5	52.8	43.9	43.9	49.9	41.1	41.1	46.7
			SHC	44.1	51.0	58.0	42.2	48.8	55.5	40.2	46.5	52.8	37.9	43.9	49.9	35.5	41.1	46.7
		62	TC	51.1	51.1	60.4	48.9	48.9	57.8	46.5	46.5	55.0	44.0	44.0	51.9	41.1	41.1	48.6
			SHC	41.8	51.1	60.4	40.0	48.9	57.8	38.1	46.5	55.0	36.0	44.0	51.9	33.7	41.1	48.6
		67	TC	55.1	55.1	55.1	52.1	52.1	52.9	49.1	49.1	51.6	45.8	45.8	50.2	42.3	42.3	48.7
			SHC	33.9	44.0	54.1	32.7	42.8	52.9	31.5	41.5	51.6	30.2	40.2	50.2	28.8	38.8	48.7
		72	TC	60.3	60.3	60.3	57.1	57.1	57.1	53.7	53.7	53.7	50.1	50.1	50.1	46.3	46.3	46.3
			SHC	24.5	34.7	44.8	23.4	33.5	43.6	22.2	32.3	42.4	21.0	31.1	41.2	19.6	29.7	39.8
		76	TC	–	64.6	64.6	–	61.2	61.2	–	57.6	57.6	–	53.8	53.8	–	49.7	49.7
			SHC	–	27.1	37.5	–	26.0	36.3	–	24.8	35.1	–	23.5	33.8	–	22.2	32.4

LEGEND:

– – Do not operate
Cfm – Cubic feet per minute (supply air)
EAT(db) – Entering air temperature (dry bulb)
EAT(wb) – Entering air temperature (wet bulb)
SHC – Sensible heat capacity
TC – Total capacity

48HC05 (4 TONS) – UNIT WITH HUMIDI–MIZER IN SUBCOOLING MODE										
Temp (F) Air Entering Condenser (Edb)		AIR ENTERING EVAPORATOR – CFM								
		1200			1600			2000		
		Air Entering Evaporator – Ewb (F)								
		72	67	62	72	67	62	72	67	62
75	TC	57.8	52.3	47.2	61.5	55.6	50.6	63.7	57.9	0.0
	SHC	24.2	30.5	36.8	27.9	35.9	44.0	31.2	40.9	0.0
	kW	2.50	2.47	2.44	2.46	2.48	2.51	2.53	2.50	0.00
85	TC	54.1	48.9	44.1	57.1	52.0	47.3	59.6	54.0	49.5
	SHC	20.7	27.3	33.9	23.9	32.6	41.0	27.3	37.3	47.1
	kW	2.81	2.78	2.76	2.78	2.80	2.82	2.84	2.81	2.79
95	TC	50.1	45.3	40.8	53.3	48.2	43.7	55.2	50.1	45.8
	SHC	17.0	24.0	30.9	20.4	29.1	37.7	23.3	33.6	43.6
	kW	3.16	3.14	3.12	3.13	3.15	3.18	3.19	3.16	3.14
105	TC	45.7	41.1	37.2	48.6	43.8	39.8	50.5	45.5	41.8
	SHC	12.9	20.1	27.6	16.0	25.0	34.1	19.0	29.4	39.9
	kW	3.56	3.54	3.52	3.54	3.55	3.58	3.59	3.56	3.55
115	TC	41.1	37.0	33.2	43.5	39.2	35.5	45.4	41.1	37.5
	SHC	8.7	16.4	23.9	11.3	20.7	30.1	14.3	25.4	35.8
	kW	4.02	4.01	4.00	4.00	4.01	4.03	4.04	4.03	4.01
125	TC	36.3	32.5	29.0	38.6	34.7	31.2	40.2	36.1	32.9
	SHC	4.3	12.2	20.1	6.8	16.6	26.2	9.4	20.8	31.5
	kW	4.54	4.53	4.53	4.53	4.54	4.54	4.55	4.54	4.54

48HC05 (4 TONS) – UNIT WITH HUMIDI–MIZER SYSTEM IN HOT GAS REHEAT MODE										
Temp (F) Air Entering Condenser (Edb)		AIR ENTERING EVAPORATOR – Ewb (F)								
		75 Dry Bulb			75 Dry Bulb			75 Dry Bulb		
		62.5 Wet Bulb			64 Wet Bulb			65.3 Wet Bulb		
		(50% Relative)			(56% Relative)			(60% Relative)		
		Air Entering Evaporator – Cfm								
		1200	1600	2000	1200	1600	2000	1200	1600	2000
80	TC	18.64	19.95	20.78	19.35	20.71	21.51	20.00	21.37	22.33
	SHC	0.78	4.36	8.24	–1.95	1.01	4.29	–4.33	–1.91	0.99
	kW	2.66	2.68	2.69	2.67	2.69	2.69	2.68	2.69	2.68
75	TC	19.37	21.21	22.15	20.47	21.97	22.92	21.15	22.78	23.65
	SHC	1.48	5.52	9.49	–0.91	2.18	5.57	–3.26	–0.61	2.20
	kW	2.62	2.54	2.54	2.56	2.55	2.55	2.56	2.55	2.56
70	TC	19.92	21.63	22.64	20.77	22.52	23.61	21.70	23.39	24.26
	SHC	2.01	5.94	9.98	–0.61	2.70	6.23	–2.72	–0.02	2.78
	kW	2.60	2.56	2.54	2.58	2.54	2.53	2.54	2.52	2.54
60	TC	20.11	21.27	22.23	20.75	23.15	23.43	22.49	23.78	24.55
	SHC	2.24	5.70	9.70	–0.57	3.35	6.15	–1.95	0.40	3.13
	kW	2.69	2.74	2.73	2.72	2.58	2.68	2.56	2.60	2.63
50	TC	21.56	22.70	23.37	22.18	23.33	24.01	22.75	23.90	25.40
	SHC	3.61	7.03	10.76	0.78	3.57	6.73	–1.67	0.57	3.96
	kW	2.57	2.63	2.66	2.60	2.66	2.69	2.63	2.69	2.62
40	TC	21.67	23.23	24.04	22.76	23.82	25.57	23.28	24.34	26.13
	SHC	3.74	7.56	9.89	1.35	4.06	8.17	–1.15	1.01	4.67
	kW	2.64	2.64	2.69	2.61	2.67	2.58	2.64	2.70	2.61

LEGEND

Edb – Entering Dry–Bulb
Ewb – Entering Wet–Bulb
kW – Compressor Motor Power Input
Idb – Leaving Dry–Bulb
Iwb – Leaving Wet–Bulb
SHC – Sensible Heat Capacity (1000 Btuh) Gross
TC – Total Capacity (1000 Btuh) Gross

NOTES:

1. Direct interpolation is permissible. Do not extrapolate.
2. The following formulas may be used:

$$t_{ldb} = t_{edb} - \frac{\text{sensible capacity (Btuh)}}{1.10 \times \text{cfm}}$$

t_{lwb} = Wet–bulb temperature corresponding to enthalpy of air leaving evaporator coil (h_{lwb})

$$h_{lwb} = h_{ewb} - \frac{\text{total capacity (Btuh)}}{4.5 \times \text{cfm}}$$

Where: h_{ewb} = Enthalpy of air entering evaporator coil

Table 16 – COOLING CAPACITIES 1-STAGE COOLING 5 TONS

48HC*A06				AMBIENT TEMPERATURE														
				85			95			105			115			125		
				EA (dB)			EA (dB)			EA (dB)			EA (dB)			EA (dB)		
				75	80	85	75	80	85	75	80	85	75	80	85	75	80	85
1500 Cfm	EA (wb)	58	TC	53.4	53.4	60.6	51.3	51.3	58.2	49.0	49.0	55.6	46.5	46.5	52.7	43.7	43.7	49.5
			SHC	46.3	53.4	60.6	44.5	51.3	58.2	42.5	49.0	55.6	40.3	46.5	52.7	37.9	43.7	49.5
		62	TC	55.6	55.6	58.2	52.9	52.9	56.9	50.0	50.0	55.5	46.9	46.9	53.9	43.8	43.8	51.6
			SHC	42.0	50.1	58.2	40.7	48.8	56.9	39.4	47.4	55.5	37.9	45.9	53.9	36.0	43.8	51.6
		67	TC	60.8	60.8	60.8	57.8	57.8	57.8	54.6	54.6	54.6	51.1	51.1	51.1	47.4	47.4	47.4
			SHC	34.4	42.6	50.7	33.2	41.3	49.4	31.8	39.9	48.1	30.4	38.5	46.6	28.9	37.0	45.1
		72	TC	66.6	66.6	66.6	63.2	63.2	63.2	59.7	59.7	59.7	55.9	55.9	55.9	51.8	51.8	51.8
			SHC	26.7	34.8	43.0	25.4	33.6	41.7	24.1	32.2	40.4	22.6	30.8	38.9	21.1	29.3	37.4
		76	TC	–	71.4	71.4	–	67.9	67.9	–	64.0	64.0	–	59.9	59.9	–	55.5	55.5
			SHC	–	28.5	36.7	–	27.2	35.5	–	25.9	34.2	–	24.5	32.7	–	23.0	31.3
1750 Cfm	EA (wb)	58	TC	56.3	56.3	63.8	54.0	54.0	61.2	51.5	51.5	58.3	48.7	48.7	55.2	45.7	45.7	51.8
			SHC	48.8	56.3	63.8	46.8	54.0	61.2	44.6	51.5	58.3	42.2	48.7	55.2	39.6	45.7	51.8
		62	TC	57.3	57.3	64.0	54.5	54.5	62.5	51.6	51.6	60.7	48.8	48.8	57.5	45.8	45.8	53.9
			SHC	45.3	54.7	64.0	44.0	53.3	62.5	42.4	51.6	60.7	40.1	48.8	57.5	37.6	45.8	53.9
		67	TC	62.5	62.5	62.5	59.3	59.3	59.3	55.9	55.9	55.9	52.3	52.3	52.3	48.3	48.3	49.7
			SHC	36.6	46.0	55.4	35.3	44.7	54.1	33.9	43.3	52.7	32.4	41.8	51.3	30.9	40.3	49.7
		72	TC	68.3	68.3	68.3	64.8	64.8	64.8	61.0	61.0	61.0	57.0	57.0	57.0	52.7	52.7	52.7
			SHC	27.5	37.0	46.5	26.2	35.7	45.2	24.9	34.4	43.8	23.4	32.9	42.4	21.9	31.4	40.8
		76	TC	–	73.2	73.2	–	69.4	69.4	–	65.4	65.4	–	61.1	61.1	–	56.5	56.5
			SHC	–	29.7	39.3	–	28.4	38.0	–	27.1	36.7	–	25.6	35.2	–	24.1	33.7
2000 Cfm	EA (wb)	58	TC	58.7	58.7	66.5	56.2	56.2	63.7	53.5	53.5	60.6	50.6	50.6	57.3	47.3	47.3	53.7
			SHC	50.9	58.7	66.5	48.7	56.2	63.7	46.4	53.5	60.6	43.8	50.6	57.3	41.0	47.3	53.7
		62	TC	58.8	58.8	69.2	56.3	56.3	66.3	53.6	53.6	63.1	50.6	50.6	59.6	47.4	47.4	55.8
			SHC	48.3	58.8	69.2	46.3	56.3	66.3	44.0	53.6	63.1	41.6	50.6	59.6	39.0	47.4	55.8
		67	TC	63.8	63.8	63.8	60.4	60.4	60.4	56.9	56.9	57.3	53.1	53.1	55.8	49.1	49.1	54.1
			SHC	38.6	49.3	60.1	37.3	48.0	58.7	35.9	46.6	57.3	34.4	45.1	55.8	32.8	43.4	54.1
		72	TC	69.6	69.6	69.6	65.9	65.9	65.9	62.1	62.1	62.1	57.9	57.9	57.9	53.5	53.5	53.5
			SHC	28.4	39.1	49.9	27.0	37.8	48.6	25.7	36.4	47.2	24.2	35.0	45.7	22.6	33.4	44.2
		76	TC	–	74.5	74.5	–	70.6	70.6	–	66.5	66.5	–	62.0	62.0	–	–	–
			SHC	–	30.8	41.8	–	29.5	40.4	–	28.2	39.0	–	26.7	37.6	–	–	–
2250 Cfm	EA (wb)	58	TC	60.7	60.7	68.8	58.1	58.1	65.8	55.2	55.2	62.6	52.1	52.1	59.1	48.7	48.7	55.2
			SHC	52.6	60.7	68.8	50.3	58.1	65.8	47.9	55.2	62.6	45.2	52.1	59.1	42.2	48.7	55.2
		62	TC	60.8	60.8	71.6	58.1	58.1	68.5	55.3	55.3	65.1	52.2	52.2	61.4	48.7	48.7	57.4
			SHC	50.0	60.8	71.6	47.8	58.1	68.5	45.4	55.3	65.1	42.9	52.2	61.4	40.1	48.7	57.4
		67	TC	64.7	64.7	64.7	61.3	61.3	63.2	57.7	57.7	61.7	53.8	53.8	60.1	49.7	49.7	58.3
			SHC	40.6	52.6	64.5	39.2	51.2	63.2	37.8	49.7	61.7	36.2	48.2	60.1	34.6	46.5	58.3
		72	TC	70.6	70.6	70.6	66.8	66.8	66.8	62.8	62.8	62.8	58.6	58.6	58.6	54.0	54.0	54.0
			SHC	29.1	41.2	53.3	27.8	39.9	51.9	26.4	38.4	50.5	24.9	37.0	49.0	23.3	35.4	47.4
		76	TC	–	75.6	75.6	–	71.6	71.6	–	67.3	67.3	–	–	–	–	–	–
			SHC	–	31.9	44.1	–	30.6	42.8	–	29.2	41.4	–	–	–	–	–	–
2500 Cfm	EA (wb)	58	TC	62.5	62.5	70.8	59.7	59.7	67.6	56.7	56.7	64.2	53.4	53.4	60.5	49.9	49.9	56.5
			SHC	54.1	62.5	70.8	51.7	59.7	67.6	49.1	56.7	64.2	46.3	53.4	60.5	43.2	49.9	56.5
		62	TC	62.5	62.5	73.6	59.7	59.7	70.3	56.7	56.7	66.8	53.5	53.5	63.0	49.9	49.9	58.8
			SHC	51.4	62.5	73.6	49.1	59.7	70.3	46.6	56.7	66.8	43.9	53.5	63.0	41.0	49.9	58.8
		67	TC	65.5	65.5	68.9	62.0	62.0	67.4	58.3	58.3	65.9	54.4	54.4	64.2	50.2	50.2	62.2
			SHC	42.5	55.7	68.9	41.1	54.3	67.4	39.6	52.7	65.9	38.0	51.1	64.2	36.3	49.2	62.2
		72	TC	71.4	71.4	71.4	67.5	67.5	67.5	63.4	63.4	63.4	59.1	59.1	59.1	54.4	54.4	54.4
			SHC	29.9	43.2	56.5	28.5	41.8	55.2	27.1	40.4	53.7	25.6	38.9	52.2	24.0	37.3	50.6
		76	TC	–	76.4	76.4	–	72.3	72.3	–	–	–	–	–	–	–	–	–
			SHC	–	33.0	46.4	–	31.6	45.1	–	–	–	–	–	–	–	–	–

LEGEND:

– – Do not operate
Cfm – Cubic feet per minute (supply air)
EAT(db) – Entering air temperature (dry bulb)
EAT(wb) – Entering air temperature (wet bulb)
SHC – Sensible heat capacity
TC – Total capacity

48HC06 (5 TONS) – UNIT WITH HUMIDI–MIZER IN SUBCOOLING MODE										
Temp (F) Air Entering Condenser (Edb)		AIR ENTERING EVAPORATOR – CFM								
		1500			2000			2500		
		Air Entering Evaporator – Ewb (F)								
		72	67	62	72	67	62	72	67	62
75	TC	66.9	60.3	54.8	71.0	64.4	58.6	73.5	66.9	61.6
	SHC	25.8	34.1	43.0	30.5	41.7	52.6	35.0	48.6	61.2
	kW	3.11	3.06	3.03	3.05	3.09	3.16	3.16	3.11	3.07
85	TC	62.4	56.5	51.2	66.3	60.1	54.7	68.2	62.3	57.5
	SHC	21.5	30.6	39.6	26.1	37.6	49.0	29.9	44.2	57.2
	kW	3.47	3.43	3.39	3.42	3.46	3.51	3.52	3.48	3.44
95	TC	57.8	52.3	47.3	61.3	55.6	50.6	63.5	57.7	53.2
	SHC	17.2	26.6	35.9	21.4	33.3	45.1	25.6	39.9	53.2
	kW	3.89	3.85	3.80	3.83	3.88	3.93	3.95	3.90	3.86
105	TC	52.8	47.5	42.9	55.4	50.0	45.3	58.0	52.2	47.9
	SHC	12.5	22.1	31.7	15.8	28.1	40.1	20.4	34.7	47.9
	kW	4.36	4.31	4.26	4.29	4.33	4.38	4.42	4.36	4.32
115	TC	47.4	42.8	38.6	50.1	45.2	41.1	51.8	47.1	43.4
	SHC	7.4	17.7	27.8	11.0	23.6	36.1	14.7	30.0	43.4
	kW	4.88	4.83	4.78	4.81	4.86	4.91	4.93	4.88	4.84
125	TC	41.6	37.5	33.8	44.0	39.7	35.8	45.8	41.3	38.0
	SHC	2.1	12.8	23.3	5.3	18.6	31.2	9.1	24.7	38.0
	kW	5.44	5.39	5.35	5.37	5.42	5.47	5.49	5.44	5.40

48HC06 (5 TONS) – UNIT WITH HUMIDI–MIZER SYSTEM IN HOT GAS REHEAT MODE										
Temp (F) Air Entering Condenser (Edb)		AIR ENTERING EVAPORATOR – Ewb (F)								
		75 Dry Bulb			75 Dry Bulb			75 Dry Bulb		
		62.5 Wet Bulb			64 Wet Bulb			65.3 Wet Bulb		
		(50% Relative)			(56% Relative)			(60% Relative)		
		Air Entering Evaporator – Cfm								
		1500	2000	2500	1500	2000	2500	1500	2000	2500
80	TC	25.29	27.61	28.72	26.81	28.62	29.71	27.68	29.53	30.63
	SHC	5.06	10.68	15.86	2.37	6.73	11.22	–0.40	3.30	7.17
	kW	3.23	3.12	3.13	3.12	3.13	3.14	3.12	3.14	3.15
75	TC	26.69	28.45	29.73	27.65	29.64	30.73	28.53	30.55	31.65
	SHC	6.39	11.52	16.85	3.20	7.72	12.20	0.43	4.29	8.16
	kW	3.08	3.11	3.09	3.10	3.09	3.11	3.11	3.10	3.12
70	TC	27.04	29.08	30.15	28.29	30.04	31.09	29.13	30.91	31.97
	SHC	6.76	12.14	17.28	3.82	8.14	12.60	1.02	4.67	8.51
	kW	3.15	3.12	3.15	3.11	3.14	3.17	3.13	3.16	3.18
60	TC	27.99	29.57	31.33	28.86	30.46	32.25	29.63	32.44	33.81
	SHC	7.70	12.66	18.45	4.41	8.60	13.74	1.54	6.16	10.28
	kW	3.17	3.23	3.15	3.21	3.26	3.18	3.23	3.12	3.10
50	TC	30.09	31.66	32.64	30.93	32.57	33.53	31.73	33.38	34.35
	SHC	9.72	14.66	19.72	6.40	10.61	14.99	3.56	7.10	10.85
	kW	3.01	3.07	3.11	3.04	3.10	3.15	3.07	3.14	3.18
40	TC	28.39	30.78	32.67	31.13	32.60	34.40	31.86	33.33	36.07
	SHC	8.17	13.89	19.80	6.63	10.69	15.85	3.72	7.10	12.51
	kW	3.39	3.32	3.24	3.14	3.23	3.15	3.18	3.27	3.08

LEGEND

Edb – Entering Dry–Bulb
Ewb – Entering Wet–Bulb
kW – Compressor Motor Power Input
Idb – Leaving Dry–Bulb
Iwb – Leaving Wet–Bulb
SHC – Sensible Heat Capacity (1000 Btuh) Gross
TC – Total Capacity (1000 Btuh) Gross

NOTES:

1. Direct interpolation is permissible. Do not extrapolate.
2. The following formulas may be used:

$$t_{ldb} = t_{edb} - \frac{\text{sensible capacity (Btuh)}}{1.10 \times \text{cfm}}$$

t_{lwb} = Wet–bulb temperature corresponding to enthalpy of air leaving evaporator coil (h_{lwb})

$$h_{lwb} = h_{ewb} - \frac{\text{total capacity (Btuh)}}{4.5 \times \text{cfm}}$$

Where: h_{ewb} = Enthalpy of air entering evaporator coil

Table 18 – COOLING CAPACITIES 1-STAGE COOLING 6 TONS

48HC*A07				AMBIENT TEMPERATURE													
				85			95			105			115			125	
				EA (dB)			EA (dB)			EA (dB)			EA (dB)			EA (dB)	
				75	80	85	75	80	85	75	80	85	75	80	85	75	80	85
1800 Cfm	EA (wb)	58	TC	64.1	64.1	72.5	61.8	61.8	69.9	59.2	59.2	67	56.3	56.3	63.7	53.2	53.2	60.2
			SHC	55.7	64.1	72.5	53.7	61.8	69.9	51.4	59.2	67	48.9	56.3	63.7	46.2	53.2	60.2
		62	TC	67.9	67.9	68.5	64.9	64.9	67	61.5	61.5	65.3	57.9	57.9	63.5	54	54	61.4
			SHC	50.2	59.4	68.5	48.8	57.9	67	47.1	56.2	65.3	45.4	54.4	63.5	43.4	52.4	61.4
		67	TC	74.8	74.8	74.8	71.5	71.5	71.5	67.8	67.8	67.8	63.8	63.8	63.8	59.5	59.5	59.5
			SHC	41.8	50.9	60.1	40.3	49.5	58.7	38.8	47.9	57.1	37.1	46.2	55.4	35.3	44.4	53.6
		72	TC	82.2	82.2	82.2	78.7	78.7	78.7	74.7	74.7	74.7	70.4	70.4	70.4	65.6	65.6	65.6
			SHC	33	42.3	51.6	31.6	40.9	50.2	30.1	39.3	48.6	28.4	37.7	46.9	26.7	35.9	45.1
		76	TC	–	88.7	88.7	–	84.8	84.8	–	80.6	80.6	–	76	76	–	70.9	70.9
			SHC	–	35.3	45.2	–	33.9	43.7	–	32.4	42	–	30.7	40.3	–	28.9	38.5
2100 Cfm	EA (wb)	58	TC	67.6	67.6	76.5	65.1	65.1	73.7	62.3	62.3	70.5	59.3	59.3	67.1	55.9	55.9	63.2
			SHC	58.7	67.6	76.5	56.6	65.1	73.7	54.1	62.3	70.5	51.5	59.3	67.1	48.5	55.9	63.2
		62	TC	70.1	70.1	74.9	67	67	73.2	63.5	63.5	71.3	59.7	59.7	69.1	56	56	65.8
			SHC	53.9	64.4	74.9	52.4	62.8	73.2	50.6	61	71.3	48.7	58.9	69.1	46.2	56	65.8
		67	TC	77.1	77.1	77.1	73.6	73.6	73.6	69.7	69.7	69.7	65.5	65.5	65.5	60.9	60.9	60.9
			SHC	44.2	54.8	65.3	42.7	53.3	63.9	41.2	51.7	62.3	39.4	50	60.5	37.6	48.1	58.6
		72	TC	84.7	84.7	84.7	80.9	80.9	80.9	76.8	76.8	76.8	72.2	72.2	72.2	67.2	67.2	67.2
			SHC	34.2	44.8	55.5	32.7	43.4	54	31.1	41.8	52.4	29.5	40.1	50.7	27.6	38.2	48.8
		76	TC	–	91.3	91.3	–	87.2	87.2	–	82.7	82.7	–	77.8	77.8	–	72.5	72.5
			SHC	–	36.7	47.8	–	35.3	46.3	–	33.7	44.7	–	32	43	–	30.2	41.1
2400 Cfm	EA (wb)	58	TC	70.6	70.6	79.9	68	68	76.9	65	65	73.5	61.7	61.7	69.8	58.1	58.1	65.8
			SHC	61.3	70.6	79.9	59	68	76.9	56.4	65	73.5	53.6	61.7	69.8	50.5	58.1	65.8
		62	TC	72	72	80.6	68.7	68.7	78.7	65.2	65.2	76.6	61.8	61.8	72.6	58.2	58.2	68.4
			SHC	57.3	69	80.6	55.6	67.2	78.7	53.7	65.2	76.6	50.9	61.8	72.6	48	58.2	68.4
		67	TC	78.9	78.9	78.9	75.2	75.2	75.2	71.2	71.2	71.2	66.8	66.8	66.8	62	62	63.4
			SHC	46.5	58.4	70.3	45	56.9	68.8	43.4	55.3	67.2	41.6	53.5	65.4	39.7	51.6	63.4
		72	TC	86.6	86.6	86.6	82.7	82.7	82.7	78.3	78.3	78.3	73.6	73.6	73.6	68.4	68.4	68.4
			SHC	35.2	47.2	59.2	33.7	45.7	57.7	32.1	44.1	56	30.4	42.3	54.3	28.5	40.5	52.4
		76	TC	–	93.3	93.3	–	89	89	–	84.4	84.4	–	79.3	79.3	–	73.7	73.7
			SHC	–	38	50.4	–	36.6	48.9	–	35	47.3	–	33.3	45.5	–	31.4	43.6
2700 Cfm	EA (wb)	58	TC	73.2	73.2	82.8	70.4	70.4	79.6	67.3	67.3	76.1	63.8	63.8	72.2	60	60	67.9
			SHC	63.6	73.2	82.8	61.1	70.4	79.6	58.4	67.3	76.1	55.4	63.8	72.2	52.1	60	67.9
		62	TC	73.7	73.7	85.5	70.5	70.5	82.8	67.3	67.3	79.1	63.9	63.9	75.1	60.1	60.1	70.6
			SHC	60.2	72.9	85.5	58.1	70.5	82.8	55.5	67.3	79.1	52.7	63.9	75.1	49.5	60.1	70.6
		67	TC	80.3	80.3	80.3	76.5	76.5	76.5	72.4	72.4	72.4	67.8	67.8	70	62.9	62.9	67.9
			SHC	48.7	61.9	75.1	47.1	60.4	73.6	45.5	58.7	71.9	43.7	56.8	70	41.7	54.8	67.9
		72	TC	88.2	88.2	88.2	84	84	84	79.6	79.6	79.6	74.6	74.6	74.6	69.3	69.3	69.3
			SHC	36.1	49.4	62.7	34.6	47.9	61.2	33	46.2	59.5	31.2	44.5	57.7	29.3	42.6	55.8
		76	TC	–	94.9	94.9	–	90.4	90.4	–	85.6	85.6	–	80.4	80.4	–	74.7	74.7
			SHC	–	39.2	52.9	–	37.7	51.4	–	36.1	49.7	–	34.4	47.9	–	32.5	46
3000 Cfm	EA (wb)	58	TC	75.4	75.4	85.3	72.5	72.5	82	69.2	69.2	78.3	65.6	65.6	74.2	61.7	61.7	69.8
			SHC	65.5	75.4	85.3	62.9	72.5	82	60.1	69.2	78.3	57	65.6	74.2	53.5	61.7	69.8
		62	TC	75.5	75.5	88.7	72.5	72.5	85.3	69.3	69.3	81.4	65.7	65.7	77.2	61.7	61.7	72.5
			SHC	62.2	75.5	88.7	59.8	72.5	85.3	57.1	69.3	81.4	54.1	65.7	77.2	50.9	61.7	72.5
		67	TC	81.4	81.4	81.4	77.5	77.5	78.1	73.3	73.3	76.4	68.7	68.7	74.4	63.7	63.7	72.2
			SHC	50.7	65.2	79.7	49.2	63.7	78.1	47.5	61.9	76.4	45.6	60	74.4	43.6	57.9	72.2
		72	TC	89.4	89.4	89.4	85.2	85.2	85.2	80.5	80.5	80.5	75.5	75.5	75.5	70.1	70.1	70.1
			SHC	36.9	51.5	66.1	35.4	50	64.6	33.8	48.3	62.9	32	46.5	61.1	30.1	44.6	59.1
		76	TC	–	96.1	96.1	–	91.6	91.6	–	86.7	86.7	–	81.3	81.3	–	75.5	75.5
			SHC	–	40.4	55.3	–	38.9	53.8	–	37.2	52.1	–	35.5	50.3	–	33.6	48.3

LEGEND:

– – Do not operate
Cfm – Cubic feet per minute (supply air)
EAT(db) – Entering air temperature (dry bulb)
EAT(wb) – Entering air temperature (wet bulb)
SHC – Sensible heat capacity
TC – Total capacity

48HC07 (6 TONS) – UNIT WITH HUMIDI–MIZER SYSTEM IN SUBCOOLING MODE										
Temp (F) Air Entering Condenser (Edb)		AIR ENTERING EVAPORATOR – CFM								
		1800			2400			3000		
		Air Entering Evaporator – Ewb (F)								
		72	67	62	72	67	62	72	67	62
75	TC	85.7	77.4	70.0	91.1	82.6	74.9	94.5	85.7	78.4
	SHC	38.2	47.1	56.1	43.9	55.6	67.1	49.0	63.1	76.4
	kW	4.05	4.01	3.97	4.00	4.04	4.08	4.09	4.05	4.02
85	TC	80.9	73.1	66.0	85.9	77.9	70.6	89.2	80.9	73.9
	SHC	33.5	42.9	52.3	38.8	51.1	63.0	43.9	58.6	72.1
	kW	4.46	4.43	4.39	4.42	4.45	4.48	4.51	4.47	4.43
95	TC	75.7	68.4	61.7	80.6	72.9	66.0	83.6	75.7	69.1
	SHC	28.7	38.5	48.3	33.8	46.4	58.7	38.6	53.7	67.6
	kW	4.92	4.89	4.86	4.88	4.91	4.95	4.96	4.92	4.90
105	TC	70.2	63.3	57.0	74.7	67.5	61.1	77.5	70.1	64.0
	SHC	23.6	33.9	44.1	28.4	41.4	54.2	32.9	48.6	62.7
	kW	5.43	5.40	5.37	5.39	5.42	5.45	5.47	5.43	5.41
115	TC	64.3	57.8	52.0	68.4	61.7	55.7	71.0	64.1	58.3
	SHC	18.2	28.9	39.6	22.7	36.2	49.4	27.0	43.1	58.2
	kW	5.99	5.96	5.93	5.95	5.98	6.01	6.02	5.99	5.97
125	TC	57.9	52.0	46.6	61.6	55.4	49.9	64.0	57.5	52.4
	SHC	12.4	23.8	34.9	16.6	30.7	44.3	20.7	37.3	52.4
	kW	6.59	6.57	6.55	6.56	6.59	6.61	6.62	6.60	6.58

48HC07 (6 TONS) – UNIT WITH HUMIDI–MIZER SYSTEM IN HOT GAS REHEAT MODE										
Temp (F) Air Entering Condenser (Edb)		AIR ENTERING EVAPORATOR – Ewb (F)								
		75 Dry Bulb			75 Dry Bulb			75 Dry Bulb		
		62.5 Wet Bulb			64 Wet Bulb			65.3 Wet Bulb		
		(50% Relative)			(56% Relative)			(60% Relative)		
		Air Entering Evaporator – Cfm								
		1800	2400	3000	1800	2400	3000	1800	2400	3000
80	TC	24.17	25.88	26.92	25.35	27.08	28.15	26.39	28.18	29.25
	SHC	–1.44	2.99	7.86	–5.08	–1.55	2.50	–8.25	–5.47	–2.14
	kW	4.15	4.16	4.17	4.17	4.18	4.18	4.18	4.19	4.20
75	TC	26.03	27.87	28.95	27.27	29.11	30.21	28.36	30.24	31.35
	SHC	0.43	4.97	9.86	–3.12	0.49	4.56	–6.19	–3.36	–0.03
	kW	3.96	3.97	3.98	3.98	3.99	4.00	4.00	4.01	4.01
70	TC	26.50	28.76	30.07	27.92	29.99	31.34	29.45	31.67	33.23
	SHC	0.87	5.84	10.97	–2.49	1.35	5.68	–5.06	–1.85	1.94
	kW	3.97	3.93	3.91	3.96	3.95	3.93	3.92	3.89	3.87
60	TC	27.59	29.22	30.17	28.70	30.33	31.30	31.50	31.32	32.91
	SHC	1.91	6.25	11.02	–1.79	1.63	5.57	–3.31	–2.39	1.45
	kW	3.95	3.99	4.01	3.99	4.02	4.04	4.09	4.05	4.01
50	TC	27.77	29.18	30.03	28.75	30.18	32.02	29.63	32.07	32.96
	SHC	2.03	6.18	10.85	–1.80	1.43	6.25	–5.14	–1.69	1.45
	kW	4.03	4.08	4.11	4.07	4.12	4.05	4.12	4.06	4.09
40	TC	29.02	30.38	31.46	29.96	31.32	32.09	30.79	33.49	34.34
	SHC	3.26	7.34	10.07	–0.63	2.54	6.29	–4.01	–0.30	2.80
	kW	3.96	4.02	4.08	4.01	4.08	4.11	4.06	4.00	4.03

LEGEND

Edb – Entering Dry–Bulb
Ewb – Entering Wet–Bulb
kW – Compressor Motor Power Input
Idb – Leaving Dry–Bulb
Iwb – Leaving Wet–Bulb
SHC – Sensible Heat Capacity (1000 Btuh) Gross
TC – Total Capacity (1000 Btuh) Gross

NOTES:

1. Direct interpolation is permissible. Do not extrapolate.
2. The following formulas may be used:

$$t_{ldb} = t_{edb} - \frac{\text{sensible capacity (Btuh)}}{1.10 \times \text{cfm}}$$

t_{lwb} = Wet–bulb temperature corresponding to enthalpy of air leaving evaporator coil (h_{lwb})

$$h_{lwb} = h_{ewb} - \frac{\text{total capacity (Btuh)}}{4.5 \times \text{cfm}}$$

Where: h_{ewb} = Enthalpy of air entering evaporator coil

Table 20 – COOLING CAPACITIES 2-STAGE COOLING 7.5 TONS

48HC*D08				AMBIENT TEMPERATURE														
				85			95			105			115			125		
				EA (dB)			EA (dB)			EA (dB)			EA (dB)			EA (dB)		
				75	80	85	75	80	85	75	80	85	75	80	85	75	80	85
2250 Cfm	EA (wb)	58	TC	81	81	91.8	77.9	77.9	88.4	74.7	74.7	84.6	71.1	71.1	80.6	67.3	67.3	76.3
			SHC	70.2	81	91.8	67.5	77.9	88.4	64.7	74.7	84.6	61.6	71.1	80.6	58.3	67.3	76.3
		62	TC	85.1	85.1	87.2	81.1	81.1	85.3	76.9	76.9	83.2	72.5	72.5	81	67.8	67.8	78.5
			SHC	63.3	75.3	87.2	61.4	73.4	85.3	59.5	71.3	83.2	57.3	69.2	81	55	66.7	78.5
		67	TC	93.3	93.3	93.3	89	89	89	84.3	84.3	84.3	79.4	79.4	79.4	74.1	74.1	74.1
			SHC	52.3	64.2	76.2	50.4	62.4	74.4	48.4	60.4	72.4	46.4	58.3	70.3	44.2	56.2	68.1
		72	TC	102.3	102.3	102.3	97.5	97.5	97.5	92.5	92.5	92.5	87.1	87.1	87.1	81.3	81.3	81.3
			SHC	40.9	53	65	39	51.1	63.1	37.1	49.2	61.2	35.1	47.1	59.1	32.9	44.9	57
		76	TC	–	110	110	–	104.8	104.8	–	99.4	99.4	–	93.5	93.5	–	87.3	87.3
			SHC	–	43.7	56.1	–	41.9	54.2	–	39.9	52.2	–	37.9	50.2	–	35.8	48
2625 Cfm	EA (wb)	58	TC	85.4	85.4	96.9	82.1	82.1	93.1	78.6	78.6	89.1	74.7	74.7	84.7	70.5	70.5	80
			SHC	74	85.4	96.9	71.2	82.1	93.1	68.1	78.6	89.1	64.7	74.7	84.7	61.1	70.5	80
		62	TC	87.8	87.8	95.7	83.7	83.7	93.6	79.3	79.3	91.3	75	75	87.8	70.6	70.6	83.2
			SHC	68.2	82	95.7	66.2	79.9	93.6	64.1	77.7	91.3	61.3	74.6	87.8	58	70.6	83.2
		67	TC	96	96	96	91.4	91.4	91.4	86.5	86.5	86.5	81.3	81.3	81.3	75.8	75.8	75.8
			SHC	55.4	69.3	83.2	53.5	67.4	81.2	51.5	65.4	79.2	49.4	63.2	77.1	47.2	61	74.8
		72	TC	105.2	105.2	105.2	100.1	100.1	100.1	94.8	94.8	94.8	89.1	89.1	89.1	83	83	83
			SHC	42.3	56.2	70.2	40.4	54.3	68.2	38.4	52.3	66.2	36.3	50.2	64.1	34.1	48	61.9
		76	TC	–	112.9	112.9	–	107.5	107.5	–	101.7	101.7	–	95.6	95.6	–	89.1	89.1
			SHC	–	45.5	59.8	–	43.6	57.8	–	41.7	55.8	–	39.6	53.7	–	37.4	51.5
3000 Cfm	EA (wb)	58	TC	89.2	89.2	101.1	85.6	85.6	97.1	81.8	81.8	92.8	77.7	77.7	88.1	73.2	73.2	83
			SHC	77.3	89.2	101.1	74.2	85.6	97.1	70.9	81.8	92.8	67.3	77.7	88.1	63.5	73.2	83
		62	TC	90.1	90.1	103.5	86.1	86.1	100.3	81.9	81.9	96.5	77.8	77.8	91.6	73.3	73.3	86.4
			SHC	72.7	88.1	103.5	70.1	85.2	100.3	67.3	81.9	96.5	63.9	77.8	91.6	60.2	73.3	86.4
		67	TC	98.1	98.1	98.1	93.3	93.3	93.3	88.2	88.2	88.2	82.8	82.8	83.6	77	77	81.3
			SHC	58.4	74.1	89.9	56.5	72.2	87.9	54.4	70.1	85.8	52.3	67.9	83.6	50	65.6	81.3
		72	TC	107.3	107.3	107.3	102.1	102.1	102.1	96.5	96.5	96.5	90.6	90.6	90.6	84.3	84.3	84.3
			SHC	43.5	59.3	75.1	41.6	57.3	73.1	39.5	55.3	71.1	37.4	53.2	69	35.2	50.9	66.7
		76	TC	–	115.2	115.2	–	109.5	109.5	–	103.5	103.5	–	97.2	97.2	–	90.4	90.4
			SHC	–	47.2	63.2	–	45.3	61.3	–	43.3	59.3	–	41.2	57.1	–	38.9	54.8
3375 Cfm	EA (wb)	58	TC	92.4	92.4	104.7	88.6	88.6	100.4	84.6	84.6	95.9	80.2	80.2	90.9	75.5	75.5	85.6
			SHC	80	92.4	104.7	76.8	88.6	100.4	73.3	84.6	95.9	69.5	80.2	90.9	65.4	75.5	85.6
		62	TC	92.5	92.5	109	88.7	88.7	104.5	84.6	84.6	99.7	80.3	80.3	94.6	75.6	75.6	89
			SHC	76	92.5	109	72.9	88.7	104.5	69.6	84.6	99.7	66	80.3	94.6	62.1	75.6	89
		67	TC	99.7	99.7	99.7	94.8	94.8	94.8	89.5	89.5	92.2	84	84	89.9	78	78	87.4
			SHC	61.3	78.8	96.4	59.3	76.8	94.3	57.2	74.7	92.2	55	72.4	89.9	52.6	70	87.4
		72	TC	109	109	109	103.6	103.6	103.6	97.8	97.8	97.8	91.8	91.8	91.8	85.3	85.3	85.3
			SHC	44.6	62.2	79.9	42.7	60.3	77.9	40.6	58.2	75.8	38.5	56.1	73.6	36.2	53.8	71.3
		76	TC	–	116.9	116.9	–	111.1	111.1	–	104.9	104.9	–	98.4	98.4	–	91.5	91.5
			SHC	–	48.8	66.6	–	46.8	64.6	–	44.8	62.6	–	42.7	60.4	–	40.4	58.1
3750 Cfm	EA (wb)	58	TC	95.1	95.1	107.8	91.2	91.2	103.3	86.9	86.9	98.5	82.3	82.3	93.3	77.4	77.4	87.8
			SHC	82.4	95.1	107.8	79	91.2	103.3	75.3	86.9	98.5	71.3	82.3	93.3	67.1	77.4	87.8
		62	TC	95.2	95.2	112.2	91.2	91.2	107.5	87	87	102.5	82.4	82.4	97.1	77.5	77.5	91.3
			SHC	78.2	95.2	112.2	75	91.2	107.5	71.5	87	102.5	67.7	82.4	97.1	63.7	77.5	91.3
		67	TC	101.1	101.1	102.6	96	96	100.5	90.6	90.6	98.3	84.9	84.9	95.9	78.9	78.9	93.2
			SHC	64	83.3	102.6	62	81.2	100.5	59.8	79.1	98.3	57.6	76.7	95.9	55.1	74.2	93.2
		72	TC	110.4	110.4	110.4	104.8	104.8	104.8	98.9	98.9	98.9	92.7	92.7	92.7	86.1	86.1	86.1
			SHC	45.7	65.1	84.5	43.7	63.1	82.5	41.7	61	80.4	39.5	58.8	78.2	37.2	56.5	75.9
		76	TC	–	118.3	118.3	–	112.4	112.4	–	106	106	–	99.4	99.4	–	92.3	92.3
			SHC	–	50.3	69.9	–	48.3	67.9	–	46.2	65.8	–	44.1	63.6	–	41.8	61.3

* See Minimum – Maximum Airflow Ratings in Table 7. Do not operate outside these limits.

LEGEND:

– – Do not operate
Cfm – Cubic feet per minute (supply air)
EAT(db) – Entering air temperature (dry bulb)
EAT(wb) – Entering air temperature (wet bulb)
SHC – Sensible heat capacity
TC – Total capacity

48HC08 (7.5 TONS) – UNIT WITH HUMIDI–MIZER SYSTEM IS SUBCOOLING MODE										
Temp (F) Air Entering Condenser (Edb)		AIR ENTERING EVAPORATOR – CFM								
		2250			3000			3750		
		Air Entering Evaporator – Ewb (F)								
		72	67	62	72	67	62	72	67	62
75	TC	101.9	92.9	84.0	109.6	96.3	89.9	113.6	103.0	94.5
	SHC	43.9	54.6	66.7	50.2	62.7	80.9	56.8	75.8	93.0
	kW	4.60	4.54	4.48	4.65	4.50	4.52	4.68	4.60	4.55
85	TC	96.6	87.3	78.9	102.8	92.9	84.5	106.5	96.7	88.7
	SHC	36.8	49.3	61.9	43.8	59.7	75.9	50.2	69.8	87.4
	kW	5.15	5.09	5.04	5.20	5.13	5.08	5.22	5.16	5.11
95	TC	90.2	81.4	73.5	95.7	86.8	78.8	99.4	90.1	82.7
	SHC	30.8	43.9	56.9	37.2	54.1	70.5	43.6	63.8	81.6
	kW	5.78	5.72	5.67	5.82	5.76	5.71	5.85	5.79	5.74
105	TC	83.5	75.2	67.8	88.8	80.2	72.7	92.0	83.2	76.4
	SHC	24.6	38.2	51.7	30.8	48.0	64.9	36.7	57.4	75.5
	kW	6.50	6.45	6.40	6.54	6.48	6.43	6.57	6.50	6.46
115	TC	76.3	68.7	61.8	81.1	73.2	66.3	84.1	76.0	69.7
	SHC	17.9	32.1	46.2	23.7	41.5	59.0	29.4	50.7	69.0
	kW	7.32	7.28	7.24	7.35	7.31	7.27	7.38	7.32	7.29
125	TC	68.6	61.6	55.4	73.0	65.7	59.3	75.8	68.2	62.6
	SHC	10.9	25.6	40.3	16.2	34.7	52.6	21.7	43.6	62.1
	kW	8.24	8.22	8.20	8.27	8.23	8.21	8.29	8.25	8.22

48HC08 (7.5 TONS) – UNIT WITH HUMIDI–MIZER SYSTEM IN HOT GAS REHEAT MODE										
Temp (F) Air Entering Condenser (Edb)		AIR ENTERING EVAPORATOR – Ewb (F)								
		75 Dry Bulb			75 Dry Bulb			75 Dry Bulb		
		62.5 Wet Bulb			64 Wet Bulb			65.3 Wet Bulb		
		(50% Relative)			(56% Relative)			(60% Relative)		
		Air Entering Evaporator – Cfm								
		2250	3000	3750	2250	3000	3750	2250	3000	3750
80	TC	24.06	26.14	27.48	25.50	27.56	28.78	26.59	28.71	29.96
	SHC	–5.55	1.16	8.38	–10.20	–4.69	1.40	–14.39	–9.85	–4.68
	kW	4.43	4.42	4.41	4.40	4.41	4.42	4.42	4.43	4.44
75	TC	24.87	27.26	28.47	26.06	28.53	30.02	27.67	29.77	31.02
	SHC	–4.77	2.23	9.32	–9.65	–3.76	2.59	–13.35	–8.83	–3.66
	kW	4.42	4.36	4.38	4.45	4.38	4.36	4.36	4.39	4.40
70	TC	25.16	27.88	28.56	26.72	29.10	30.26	28.17	30.20	31.83
	SHC	–4.48	2.84	9.45	–9.02	–3.19	2.85	–12.88	–8.40	–2.87
	kW	4.49	4.38	4.48	4.44	4.41	4.44	4.40	4.44	4.40
60	TC	26.43	28.14	29.14	27.49	29.24	30.27	28.50	30.24	32.33
	SHC	–3.25	3.14	10.05	–8.26	–2.99	2.94	–12.54	–8.29	–2.32
	kW	4.48	4.55	4.59	4.53	4.60	4.65	4.58	4.65	4.54
50	TC	27.19	29.55	31.26	28.94	30.59	32.36	30.54	31.54	32.52
	SHC	–2.50	4.50	12.05	–6.87	–1.69	4.92	–10.60	–7.02	–2.07
	kW	4.53	4.51	4.46	4.48	4.57	4.52	4.43	4.63	4.70
40	TC	27.92	31.58	32.82	28.81	32.60	33.54	31.82	33.50	34.44
	SHC	–1.79	6.42	10.84	–6.94	0.23	6.05	–9.36	–5.15	–0.25
	kW	4.57	4.37	4.46	4.65	4.45	4.51	4.40	4.51	4.58

LEGEND

Edb – Entering Dry–Bulb
Ewb – Entering Wet–Bulb
kW – Compressor Motor Power Input
Idb – Leaving Dry–Bulb
Iwb – Leaving Wet–Bulb
SHC – Sensible Heat Capacity (1000 Btuh) Gross
TC – Total Capacity (1000 Btuh) Gross

NOTES:

1. Direct interpolation is permissible. Do not extrapolate.
2. The following formulas may be used:

$$t_{ldb} = t_{edb} - \frac{\text{sensible capacity (Btuh)}}{1.10 \times \text{cfm}}$$

t_{lwb} = Wet–bulb temperature corresponding to enthalpy of air leaving evaporator coil (h_{lwb})

$$h_{lwb} = h_{ewb} - \frac{\text{total capacity (Btuh)}}{4.5 \times \text{cfm}}$$

Where: h_{ewb} = Enthalpy of air entering evaporator coil

Table 22 – COOLING CAPACITIES 2-STAGE COOLING 8.5 TONS

48HC*D09				AMBIENT TEMPERATURE														
				85			95			105			115			125		
				EA (dB)			EA (dB)			EA (dB)			EA (dB)			EA (dB)		
				75	80	85	75	80	85	75	80	85	75	80	85	75	80	85
2550 Cfm	EA (wb)	58	TC	90.5	90.5	102.4	87	87	98.5	83.2	83.2	94.2	79.1	79.1	89.6	74.7	74.7	84.6
			SHC	78.6	90.5	102.4	75.5	87	98.5	72.2	83.2	94.2	68.7	79.1	89.6	64.8	74.7	84.6
		62	TC	94.8	94.8	98.1	90.2	90.2	95.8	85.4	85.4	93.4	80.3	80.3	90.8	74.9	74.9	87.8
			SHC	71.2	84.6	98.1	69.1	82.4	95.8	66.8	80.1	93.4	64.3	77.5	90.8	61.6	74.7	87.8
		67	TC	104	104	104	99	99	99	93.7	93.7	93.7	88	88	88	81.9	81.9	81.9
			SHC	58.7	72.2	85.7	56.6	70	83.5	54.3	67.8	81.3	52	65.4	78.9	49.5	62.9	76.4
		72	TC	114	114	114	108.5	108.5	108.5	102.7	102.7	102.7	96.5	96.5	96.5	89.8	89.8	89.8
			SHC	45.8	59.3	72.9	43.7	57.2	70.8	41.4	55	68.5	39.1	52.7	66.2	36.7	50.2	63.7
		76	TC	–	122.4	122.4	–	116.5	116.5	–	110.3	110.3	–	103.7	103.7	–	96.5	96.5
			SHC	–	48.8	62.8	–	46.7	60.6	–	44.5	58.4	–	42.2	56	–	39.8	53.5
2975 Cfm	EA (wb)	58	TC	95.4	95.4	108	91.6	91.6	103.7	87.5	87.5	99	83.1	83.1	94	78.3	78.3	88.6
			SHC	82.8	95.4	108	79.5	91.6	103.7	75.9	87.5	99	72.1	83.1	94	68	78.3	88.6
		62	TC	97.7	97.7	107.4	93	93	104.9	88.1	88.1	102.1	83.2	83.2	97.9	78.4	78.4	92.2
			SHC	76.7	92	107.4	74.3	89.6	104.9	71.8	86.9	102.1	68.6	83.2	97.9	64.6	78.4	92.2
		67	TC	106.9	106.9	106.9	101.6	101.6	101.6	96	96	96	90.1	90.1	90.1	83.7	83.7	83.9
			SHC	62.3	77.8	93.4	60.1	75.6	91.2	57.8	73.3	88.9	55.4	70.9	86.5	52.8	68.3	83.9
		72	TC	117	117	117	111.2	111.2	111.2	105.1	105.1	105.1	98.6	98.6	98.6	91.7	91.7	91.7
			SHC	47.3	62.9	78.6	45.1	60.8	76.4	42.9	58.5	74.1	40.5	56.1	71.7	38	53.6	69.2
		76	TC	–	125.6	125.6	–	119.4	119.4	–	112.8	112.8	–	105.9	105.9	–	98.4	98.4
			SHC	–	50.8	66.8	–	48.7	64.6	–	46.4	62.3	–	44.1	59.9	–	41.6	57.4
3400 Cfm	EA (wb)	58	TC	99.5	99.5	112.7	95.4	95.4	108	91	91	103	86.3	86.3	97.7	81.2	81.2	91.9
			SHC	86.4	99.5	112.7	82.8	95.4	108	79	91	103	74.9	86.3	97.7	70.5	81.2	91.9
		62	TC	100.3	100.3	115.8	95.6	95.6	112.4	91.2	91.2	107.2	86.4	86.4	101.6	81.3	81.3	95.6
			SHC	81.5	98.6	115.8	78.7	95.6	112.4	75.1	91.2	107.2	71.2	86.4	101.6	67	81.3	95.6
		67	TC	109.1	109.1	109.1	103.6	103.6	103.6	97.8	97.8	97.8	91.6	91.6	93.7	85	85	90.9
			SHC	65.6	83.2	100.8	63.4	81	98.6	61	78.6	96.2	58.6	76.1	93.7	55.9	73.4	90.9
		72	TC	119.3	119.3	119.3	113.3	113.3	113.3	107	107	107	100.3	100.3	100.3	93	93	93
			SHC	48.7	66.4	84.1	46.5	64.2	81.8	44.2	61.8	79.5	41.8	59.4	77.1	39.2	56.9	74.5
		76	TC	–	128	128	–	121.5	121.5	–	114.7	114.7	–	107.5	107.5	–	99.8	99.8
			SHC	–	52.6	70.6	–	50.5	68.4	–	48.2	66.1	–	45.8	63.6	–	43.3	61.1
3825 Cfm	EA (wb)	58	TC	103	103	116.6	98.7	98.7	111.7	94	94	106.4	89	89	100.8	83.6	83.6	94.7
			SHC	89.4	103	116.6	85.6	98.7	111.7	81.6	94	106.4	77.3	89	100.8	72.6	83.6	94.7
		62	TC	103.1	103.1	121.3	98.8	98.8	116.1	94.1	94.1	110.7	89.1	89.1	104.8	83.7	83.7	98.4
			SHC	85	103.1	121.3	81.4	98.8	116.1	77.5	94.1	110.7	73.4	89.1	104.8	69	83.7	98.4
		67	TC	110.9	110.9	110.9	105.2	105.2	105.7	99.2	99.2	103.2	92.9	92.9	100.5	86.1	86.1	97.6
			SHC	68.8	88.4	108	66.5	86.1	105.7	64.1	83.7	103.2	61.6	81.1	100.5	58.9	78.3	97.6
		72	TC	121.2	121.2	121.2	114.9	114.9	114.9	108.4	108.4	108.4	101.5	101.5	101.5	94.1	94.1	94.1
			SHC	50	69.7	89.4	47.7	67.4	87.1	45.4	65.1	84.7	43	62.6	82.3	40.4	60	79.6
		76	TC	–	129.8	129.8	–	123.2	123.2	–	116.2	116.2	–	108.8	108.8	–	100.9	100.9
			SHC	–	54.4	74.3	–	52.2	72.1	–	49.9	69.7	–	47.5	67.3	–	44.9	64.7
4250 Cfm	EA (wb)	58	TC	106	106	119.9	101.4	101.4	114.8	96.6	96.6	109.3	91.3	91.3	103.4	85.7	85.7	97
			SHC	92	106	119.9	88	101.4	114.8	83.8	96.6	109.3	79.3	91.3	103.4	74.4	85.7	97
		62	TC	106.1	106.1	124.7	101.5	101.5	119.4	96.6	96.6	113.6	91.4	91.4	107.5	85.7	85.7	100.8
			SHC	87.4	106.1	124.7	83.6	101.5	119.4	79.6	96.6	113.6	75.3	91.4	107.5	70.6	85.7	100.8
		67	TC	112.3	112.3	114.9	106.5	106.5	112.5	100.4	100.4	109.9	93.9	93.9	107	87.1	87.1	103.8
			SHC	71.8	93.4	114.9	69.5	91	112.5	67	88.5	109.9	64.4	85.7	107	61.6	82.7	103.8
		72	TC	122.6	122.6	122.6	116.2	116.2	116.2	109.5	109.5	109.5	102.5	102.5	102.5	94.9	94.9	94.9
			SHC	51.2	72.8	94.5	48.9	70.5	92.2	46.6	68.2	89.8	44.1	65.7	87.3	41.5	63.1	84.6
		76	TC	–	131.3	131.3	–	124.5	124.5	–	117.4	117.4	–	109.8	109.8	–	101.8	101.8
			SHC	–	56	77.9	–	53.8	75.6	–	51.5	73.3	–	49.1	70.8	–	46.5	68.1

* See Minimum–Maximum Airflow Ratings in Table 7. Do not operate outside these limits.

LEGEND:

– – Do not operate
Cfm – Cubic feet per minute (supply air)
EAT(db) – Entering air temperature (dry bulb)
EAT(wb) – Entering air temperature (wet bulb)
SHC – Sensible heat capacity
TC – Total capacity

48HC09 (8.5 TONS) – UNIT WITH HUMIDI–MIZER SYSTEM IN SUBCOOLING MODE										
Temp (F) Air Entering Condenser (Edb)		AIR ENTERING EVAPORATOR – CFM								
		2550			3400			4250		
		Air Entering Evaporator – Ewb (F)								
		72	67	62	72	67	62	72	67	62
75	TC	114.7	103.9	93.9	104.3	110.6	100.5	122.9	114.6	105.5
	SHC	48.7	62.2	75.7	84.7	74.2	91.4	60.6	85.1	103.9
	kW	5.17	5.09	5.01	5.10	5.14	5.07	5.20	5.18	5.11
85	TC	107.8	97.4	88.0	114.2	102.9	94.2	116.2	107.6	98.7
	SHC	42.3	56.3	70.3	49.7	67.0	85.6	61.1	78.7	97.3
	kW	5.79	5.71	5.63	5.85	5.75	5.69	5.88	5.80	5.72
95	TC	100.5	90.8	82.0	106.6	96.2	87.7	110.2	100.1	92.2
	SHC	35.6	50.2	64.8	42.8	61.0	79.6	49.2	71.9	91.0
	kW	6.50	6.42	6.34	6.56	6.46	6.40	6.59	6.50	6.44
105	TC	92.7	83.8	75.7	98.5	89.0	80.9	102.1	92.4	85.1
	SHC	28.5	43.9	59.1	35.4	54.6	73.4	41.9	64.9	84.2
	kW	7.30	7.23	7.16	7.36	7.28	7.21	7.40	7.31	7.25
115	TC	85.0	76.5	69.0	90.0	81.3	73.8	93.3	84.4	77.7
	SHC	21.5	37.4	53.1	27.7	47.6	66.9	34.0	57.7	77.0
	kW	8.23	8.16	8.10	8.27	8.20	8.14	8.31	8.23	8.18
125	TC	76.5	68.8	61.8	81.1	72.9	66.2	84.1	75.8	69.8
	SHC	13.8	30.4	46.7	19.7	40.0	60.1	25.6	50.0	69.8
	kW	9.25	9.20	9.16	9.28	9.22	9.19	9.31	9.25	9.21

48HC09 (8.5 TONS) – UNIT WITH HUMIDI–MIZER SYSTEM IN HOT GAS REHEAT MODE										
Temp (F) Air Entering Condenser (Edb)		AIR ENTERING EVAPORATOR – Ewb (F)								
		75 Dry Bulb			75 Dry Bulb			75 Dry Bulb		
		62.5 Wet Bulb			64 Wet Bulb			65.3 Wet Bulb		
		(50% Relative)			(56% Relative)			(60% Relative)		
		Air Entering Evaporator – Cfm								
		2550	3400	4250	2550	3400	4250	2550	3400	4250
80	TC	27.53	29.56	30.72	28.95	31.03	32.22	30.26	32.33	33.58
	SHC	–3.84	3.82	11.92	–9.25	–2.92	4.09	–13.93	–8.77	–2.82
	kW	5.09	5.11	5.13	5.11	5.14	5.15	5.14	5.15	5.17
75	TC	29.09	31.60	32.81	30.77	33.10	34.33	32.30	34.45	35.73
	SHC	–2.34	5.72	13.84	–7.51	–0.98	6.04	–11.95	–6.78	–0.82
	kW	4.97	4.91	4.93	4.95	4.94	4.95	4.94	4.96	4.97
70	TC	29.58	32.45	33.63	31.48	34.12	35.55	33.12	35.65	37.38
	SHC	–1.88	6.54	14.63	–6.83	0.00	7.20	–11.16	–5.63	0.75
	kW	4.99	4.90	4.92	4.96	4.90	4.89	4.93	4.90	4.86
60	TC	30.71	33.44	34.52	32.90	34.79	35.86	34.07	36.02	37.09
	SHC	–0.78	7.52	15.54	–5.47	0.68	7.57	–10.28	–5.24	0.55
	kW	5.03	4.95	5.00	4.94	5.01	5.05	4.99	5.06	5.09
50	TC	32.63	34.31	35.26	33.81	35.53	36.51	34.90	36.66	37.65
	SHC	1.05	8.38	16.29	–4.60	1.42	8.24	–9.49	–4.59	1.14
	kW	4.92	5.01	5.06	4.99	5.07	5.13	5.05	5.14	5.19
40	TC	31.94	33.26	35.77	32.96	35.70	37.86	35.17	38.01	38.92
	SHC	0.45	7.47	13.75	–5.35	1.63	9.52	–9.20	–3.29	2.36
	kW	5.16	5.27	5.20	5.25	5.19	5.10	5.16	5.11	5.17

LEGEND

Edb – Entering Dry–Bulb
Ewb – Entering Wet–Bulb
kW – Compressor Motor Power Input
Idb – Leaving Dry–Bulb
Iwb – Leaving Wet–Bulb
SHC – Sensible Heat Capacity (1000 Btuh) Gross
TC – Total Capacity (1000 Btuh) Gross

NOTES:

1. Direct interpolation is permissible. Do not extrapolate.
2. The following formulas may be used:

$$t_{ldb} = t_{edb} - \frac{\text{sensible capacity (Btuh)}}{1.10 \times \text{cfm}}$$

t_{lwb} = Wet–bulb temperature corresponding to enthalpy of air leaving evaporator coil (h_{lwb})

$$h_{lwb} = h_{ewb} - \frac{\text{total capacity (Btuh)}}{4.5 \times \text{cfm}}$$

Where: h_{ewb} = Enthalpy of air entering evaporator coil

Table 24 – COOLING CAPACITIES 2-STAGE COOLING 10 TONS (12.0 EER)

48HC*D11				AMBIENT TEMPERATURE														
				85			95			105			115			125		
				EA (dB)			EA (dB)			EA (dB)			EA (dB)			EA (dB)		
				75	80	85	75	80	85	75	80	85	75	80	85	75	80	85
3000 Cfm	EA (wB)	58	THC	105.6	105.6	118.0	101.7	101.7	114.1	97.5	97.5	109.9	97.5	97.5	109.9	87.8	87.8	100.2
			SHC	93.3	105.6	118.0	89.4	101.7	114.1	85.1	97.5	109.9	85.1	97.5	109.9	75.4	87.8	100.2
		62	THC	110.6	110.6	110.6	105.5	105.5	108.0	100.1	100.1	105.5	100.1	100.1	105.5	88.5	88.5	98.5
			SHC	85.6	98.0	110.3	83.3	95.7	108.0	80.7	93.1	105.5	80.7	93.1	105.5	73.8	86.1	98.5
		67	THC	120.5	120.5	120.5	115.0	115.0	115.0	109.0	109.0	109.0	109.0	109.0	109.0	95.7	95.7	95.7
			SHC	70.0	82.3	94.7	67.7	80.1	92.5	65.4	77.8	90.1	65.4	77.8	90.1	60.0	72.4	84.8
		72	THC	131.4	131.4	131.4	125.4	125.4	125.4	118.8	118.8	118.8	118.8	118.8	118.8	104.2	104.2	104.2
			SHC	53.9	66.3	78.7	51.8	64.2	76.6	49.5	61.9	74.3	49.5	61.9	74.3	44.3	56.7	69.1
		76	THC	–	140.8	140.8	–	134.2	134.2	–	127.0	127.0	–	127.0	127.0	–	111.5	111.5
			SHC	–	52.5	64.9	–	50.8	63.2	–	48.7	61.1	–	48.7	61.1	–	44.0	56.4
3500 Cfm	EA (wB)	58	THC	110.9	110.9	125.3	106.7	106.7	121.1	102.1	102.1	116.5	102.1	102.1	116.5	91.6	91.6	106.0
			SHC	96.4	110.9	125.3	92.2	106.7	121.1	87.6	102.1	116.5	87.6	102.1	116.5	77.1	91.6	106.0
		62	THC	113.6	113.6	120.7	108.4	108.4	118.1	103.1	103.1	114.5	103.1	103.1	114.5	92.0	92.0	105.3
			SHC	91.9	106.3	120.7	89.3	103.7	118.1	85.7	100.1	114.5	85.7	100.1	114.5	76.4	90.8	105.3
		67	THC	123.5	123.5	123.5	117.8	117.8	117.8	111.5	111.5	111.5	111.5	111.5	111.5	97.6	97.6	97.6
			SHC	74.2	88.6	103.1	72.2	86.6	101.0	69.8	84.3	98.7	69.8	84.3	98.7	64.3	78.8	93.2
		72	THC	134.6	134.6	134.6	128.2	128.2	128.2	121.3	121.3	121.3	121.3	121.3	121.3	106.1	106.1	106.1
			SHC	55.9	70.3	84.8	53.7	68.1	82.6	51.4	65.8	80.2	51.4	65.8	80.2	46.1	60.6	75.0
		76	THC	–	144.0	144.0	–	137.1	137.1	–	129.7	129.7	–	129.7	129.7	–	113.5	113.5
			SHC	–	55.3	69.7	–	53.1	67.6	–	50.9	65.4	–	50.9	65.4	–	46.0	60.5
4000 Cfm	EA (wB)	58	THC	115.3	115.3	131.8	110.7	110.7	127.2	105.8	105.8	122.3	105.8	105.8	122.3	94.6	94.6	111.1
			SHC	98.8	115.3	131.8	94.2	110.7	127.2	89.3	105.8	122.3	89.3	105.8	122.3	78.1	94.6	111.1
		62	THC	116.5	116.5	129.1	112.0	112.0	124.0	106.5	106.5	120.9	106.5	106.5	120.9	94.7	94.7	111.2
			SHC	96.1	112.6	129.1	91.0	107.5	124.0	87.9	104.4	120.9	87.9	104.4	120.9	78.2	94.7	111.2
		67	THC	125.9	125.9	125.9	119.8	119.8	119.8	113.3	113.3	113.3	113.3	113.3	113.3	99.1	99.1	101.1
			SHC	78.2	94.7	111.2	76.0	92.5	109.0	73.5	90.0	106.5	73.5	90.0	106.5	68.1	84.6	101.1
		72	THC	137.0	137.0	137.0	130.3	130.3	130.3	123.2	123.2	123.2	123.2	123.2	123.2	107.5	107.5	107.5
			SHC	57.7	74.2	90.7	55.4	71.9	88.4	53.0	69.5	86.0	53.0	69.5	86.0	47.7	64.2	80.7
		76	THC	–	146.5	146.5	–	139.3	139.3	–	131.6	131.6	–	131.6	131.6	–	115.0	115.0
			SHC	–	57.4	73.9	–	55.3	71.8	–	53.0	69.5	–	53.0	69.5	–	48.0	64.5
4500 Cfm	EA (wB)	58	THC	118.9	118.9	137.5	114.1	114.1	132.7	108.9	108.9	127.5	108.9	108.9	127.5	97.2	97.2	115.8
			SHC	100.3	118.9	137.5	95.5	114.1	132.7	90.3	108.9	127.5	90.3	108.9	127.5	78.6	97.2	115.8
		62	THC	119.9	119.9	135.3	115.0	115.0	130.8	109.2	109.2	126.7	109.2	109.2	126.7	97.2	97.2	115.8
			SHC	98.2	116.8	135.3	93.7	112.3	130.8	89.6	108.2	126.7	89.6	108.2	126.7	78.7	97.2	115.8
		67	THC	127.7	127.7	127.7	121.4	121.4	121.4	114.8	114.8	114.8	114.8	114.8	114.8	100.1	100.1	108.5
			SHC	82.1	100.7	119.3	79.8	98.3	116.9	77.2	95.8	114.4	77.2	95.8	114.4	71.4	89.9	108.5
		72	THC	138.9	138.9	138.9	132.1	132.1	132.1	124.7	124.7	124.7	124.7	124.7	124.7	108.6	108.6	108.6
			SHC	59.3	77.9	96.5	57.2	75.7	94.3	54.8	73.3	91.9	54.8	73.3	91.9	49.3	67.9	86.5
		76	THC	–	148.4	148.4	–	141.1	141.1	–	133.2	133.2	–	133.2	133.2	–	116.1	116.1
			SHC	–	59.4	78.0	–	57.2	75.8	–	54.9	73.5	–	54.9	73.5	–	49.9	68.4
5000 Cfm	EA (wB)	58	THC	122.0	122.0	142.6	117.0	117.0	137.6	111.6	111.6	132.2	111.6	111.6	132.2	99.3	99.3	119.9
			SHC	101.4	122.0	142.6	96.4	117.0	137.6	90.9	111.6	132.2	90.9	111.6	132.2	78.7	99.3	119.9
		62	THC	122.7	122.7	141.4	117.1	117.1	137.7	111.6	111.6	132.2	111.6	111.6	132.2	99.4	99.4	120.0
			SHC	100.2	120.8	141.4	96.4	117.1	137.7	91.0	111.6	132.2	91.0	111.6	132.2	78.8	99.4	120.0
		67	THC	129.2	129.2	129.2	122.8	122.8	124.6	115.9	115.9	121.9	115.9	115.9	121.9	101.1	101.1	115.7
			SHC	85.7	106.4	127.0	83.3	104.0	124.6	80.7	101.3	121.9	80.7	101.3	121.9	74.4	95.1	115.7
		72	THC	140.5	140.5	140.5	133.4	133.4	133.4	125.9	125.9	125.9	125.9	125.9	125.9	109.6	109.6	109.6
			SHC	61.0	81.6	102.3	58.7	79.3	99.9	56.3	76.9	97.5	56.3	76.9	97.5	50.9	71.5	92.1
		76	THC	–	150.1	150.1	–	142.6	142.6	–	134.5	134.5	–	134.5	134.5	–	117.1	117.1
			SHC	–	61.4	82.0	–	59.2	79.8	–	56.8	77.4	–	56.8	77.4	–	51.7	72.3

* See Minimum–Maximum Airflow Ratings in Table 7. Do not operate outside these limits.

LEGEND:

– – Do not operate
Cfm – Cubic feet per minute (supply air)
EAT(db) – Entering air temperature (dry bulb)
EAT(wb) – Entering air temperature (wet bulb)
SHC – Sensible heat capacity
TC – Total capacity

NOTES:

1. Direct interpolation is permissible. Do not extrapolate.
2. The following formulas may be used:

$$t_{ldb} = t_{edb} - \frac{\text{sensible capacity (Btuh)}}{1.10 \times \text{cfm}}$$

t_{lwb} = Wet–bulb temperature corresponding to enthalpy of air leaving evaporator coil (h_{lwb})

$$h_{lwb} = h_{ewb} - \frac{\text{total capacity (Btuh)}}{4.5 \times \text{cfm}}$$

Where: h_{ewb} = Enthalpy of air entering evaporator coil

48HC11 (10 TONS) – UNIT WITH HUMIDI–MIZER SYSTEM IN SUBCOOLING MODE										
Temp (F) Air Entering Condenser (Edb)		AIR ENTERING EVAPORATOR – CFM								
		3000			4000			5000		
		Air Entering Evaporator – Ewb (F)								
		72	67	62	72	67	62	72	67	62
75	TC	121.34	110.46	99.60	139.20	125.18	111.17	157.20	140.10	110.50
	SHC	58.86	72.03	85.20	67.31	80.25	93.18	74.00	86.80	72.00
	kW	6.61	6.54	6.45	6.65	6.58	6.50	6.67	6.62	6.53
85	TC	115.30	105.01	94.73	128.03	114.90	101.77	140.90	124.90	105.00
	SHC	45.81	62.19	78.57	55.02	71.16	87.29	62.30	78.30	62.20
	kW	6.76	6.88	6.78	6.80	6.73	6.83	6.82	6.77	6.87
95	TC	109.26	99.57	89.89	116.87	104.62	92.38	124.60	109.70	99.60
	SHC	32.76	52.35	71.93	42.70	62.07	81.40	50.60	69.80	52.30
	kW	7.55	7.49	7.39	7.58	7.51	7.45	7.60	7.56	7.49
105	TC	103.21	94.13	85.04	105.71	94.34	82.98	108.20	94.60	94.10
	SHC	19.71	42.51	65.30	30.45	52.98	75.51	39.00	61.30	42.50
	kW	8.47	8.42	8.32	8.51	8.44	8.37	8.53	8.49	8.41
115	TC	97.17	88.68	80.20	94.54	84.06	73.58	91.90	79.40	88.70
	SHC	6.67	32.66	58.66	18.16	43.89	69.62	27.30	52.80	32.60
	kW	9.42	9.37	9.27	9.46	9.39	9.32	9.48	9.44	9.36
125	TC	91.12	83.24	75.36	83.38	73.78	64.19	75.60	64.20	83.20
	SHC	–6.40	22.82	52.03	5.87	34.80	63.73	15.60	44.30	22.80
	kW	10.35	10.30	10.20	10.39	10.32	10.25	10.41	10.37	10.29

48HC11 (10 TONS) – UNIT WITH HUMIDI–MIZER SYSTEM IN HOT GAS REHEAT MODE										
Temp (F) Air Entering Condenser (Edb)		AIR ENTERING EVAPORATOR – Ewb (F)								
		75 Dry Bulb 62.5 Wet Bulb (50% Relative)			75 Dry Bulb 64 Wet Bulb (56% Relative)			75 Dry Bulb 65.3 Wet Bulb (60% Relative)		
		Air Entering Evaporator – Cfm								
		3000	4000	5000	3000	4000	5000	3000	4000	5000
75	TC	46.00	49.70	52.50	50.20	52.60	55.00	51.40	55.60	57.90
	SHC	8.50	18.40	26.50	3.60	11.90	18.50	–1.10	5.20	11.70
	kW	6.56	6.50	6.42	6.55	6.48	6.40	6.53	6.49	6.40
85	TC	47.80	51.30	54.10	51.70	54.20	56.80	53.30	57.50	59.70
	SHC	10.20	20.00	28.20	5.30	13.40	20.10	0.50	6.80	13.20
	kW	6.51	6.45	6.36	6.50	6.44	6.35	6.47	6.44	6.35
95	TC	50.00	53.60	56.20	54.00	56.30	58.80	55.30	59.60	61.80
	SHC	12.00	21.60	29.80	6.90	15.00	21.70	2.20	8.50	14.70
	kW	6.45	6.40	6.29	6.45	6.39	6.28	6.42	6.39	6.28
105	TC	54.00	57.50	60.10	57.90	60.20	62.70	59.30	63.50	65.70
	SHC	15.20	24.70	31.90	10.20	18.30	24.90	5.40	11.80	18.00
	kW	6.33	6.28	6.19	6.33	6.27	6.17	6.30	6.27	6.17
115	TC	58.00	61.40	64.20	61.80	64.40	66.50	63.30	67.20	69.50
	SHC	18.50	28.00	36.20	13.50	21.50	28.20	8.70	15.10	21.30
	kW	6.22	6.17	6.10	6.22	6.16	6.08	6.19	6.16	6.08
125	TC	61.90	65.30	68.00	65.70	68.10	70.50	67.20	71.30	73.50
	SHC	21.70	31.10	39.30	16.70	24.90	31.20	12.00	18.30	24.60
	kW	6.10	6.05	5.98	6.10	6.04	5.96	6.07	6.04	5.96

LEGEND

Edb – Entering Dry–Bulb
Ewb – Entering Wet–Bulb
kW – Compressor Motor Power Input
Idb – Leaving Dry–Bulb
Iwb – Leaving Wet–Bulb
SHC – Sensible Heat Capacity (1000 Btuh) Gross
TC – Total Capacity (1000 Btuh) Gross

NOTES:

1. Direct interpolation is permissible. Do not extrapolate.
2. The following formulas may be used:

$$t_{ldb} = t_{edb} - \frac{\text{sensible capacity (Btuh)}}{1.10 \times \text{cfm}}$$

t_{lwb} = Wet–bulb temperature corresponding to enthalpy of air leaving evaporator coil (h_{lwb})

$$h_{lwb} = h_{ewb} - \frac{\text{total capacity (Btuh)}}{4.5 \times \text{cfm}}$$

Where: h_{ewb} = Enthalpy of air entering evaporator coil

Table 26 – COOLING CAPACITIES 2-STAGE COOLING 10 TONS (11.5 EER)

48HC*D12				AMBIENT TEMPERATURE														
				85			95			105			115			125		
				EA (dB)			EA (dB)			EA (dB)			EA (dB)			EA (dB)		
				75	80	85	75	80	85	75	80	85	75	80	85	75	80	85
3000 Cfm	EA (wb)	58	TC	104.3	104.3	118.5	99.5	99.5	113	93.4	93.4	106.1	86.7	86.7	98.6	79.7	79.7	90.6
			SHC	90.2	104.3	118.5	86	99.5	113	80.6	93.4	106.1	74.9	86.7	98.6	68.8	79.7	90.6
		62	TC	109.7	109.7	112.4	103.6	103.6	109.5	95.9	95.9	105.9	87.6	87.6	101.2	79.8	79.8	94.4
			SHC	80.8	96.6	112.4	78	93.8	109.5	74.5	90.2	105.9	70.3	85.7	101.2	65.2	79.8	94.4
		67	TC	121.5	121.5	121.5	115.4	115.4	115.4	107.8	107.8	107.8	98.7	98.7	98.7	89.1	89.1	89.1
			SHC	65.2	81	96.9	62.7	78.6	94.5	59.7	75.6	91.5	56.2	72	87.9	52.5	68.3	84.2
		72	TC	133	133	133	127.1	127.1	127.1	120.5	120.5	120.5	112	112	112	102.1	102.1	102.1
			SHC	48.7	64.5	80.4	46.5	62.4	78.3	44.1	60	75.9	41.2	57.1	73	37.8	53.7	69.6
		76	TC	–	140.9	140.9	–	135.1	135.1	–	128.4	128.4	–	121.3	121.3	–	112.5	112.5
			SHC	–	50.6	67.1	–	48.7	65.2	–	46.6	63.1	–	44.3	60.7	–	41.4	57.7
3500 Cfm	EA (wb)	58	TC	109.9	109.9	124.9	104.9	104.9	119.3	98.7	98.7	112.2	91.6	91.6	104.2	84.2	84.2	95.8
			SHC	94.9	109.9	124.9	90.6	104.9	119.3	85.2	98.7	112.2	79	91.6	104.2	72.6	84.2	95.8
		62	TC	112.8	112.8	123.1	106.7	106.7	120	99.5	99.5	115.3	91.7	91.7	108.5	84.3	84.3	99.8
			SHC	86.8	104.9	123.1	83.9	102	120	80	97.6	115.3	74.9	91.7	108.5	68.8	84.3	99.8
		67	TC	124.2	124.2	124.2	118	118	118	110.3	110.3	110.3	101	101	101	91	91	92.5
			SHC	68.4	86.7	104.9	66.1	84.3	102.6	63.2	81.5	99.8	59.6	78	96.3	55.9	74.2	92.5
		72	TC	135.2	135.2	135.2	129.1	129.1	129.1	122.4	122.4	122.4	114.2	114.2	114.2	104.2	104.2	104.2
			SHC	49.2	67.3	85.4	47.1	65.3	83.4	44.8	63	81.2	42	60.4	78.7	38.7	57.1	75.5
		76	TC	–	142.4	142.4	–	136.5	136.5	–	129.6	129.6	–	122.4	122.4	–	114	114
			SHC	–	51.7	70.9	–	49.7	68.7	–	47.5	66.3	–	45.2	63.8	–	42.6	61.2
4000 Cfm	EA (wb)	58	TC	114.3	114.3	130	109.2	109.2	124.2	102.9	102.9	117	95.4	95.4	108.7	87.7	87.7	99.9
			SHC	98.6	114.3	130	94.2	109.2	124.2	88.7	102.9	117	82.2	95.4	108.7	75.5	87.7	99.9
		62	TC	115.3	115.3	132.4	109.6	109.6	128.3	102.9	102.9	121.9	95.5	95.5	113.2	87.8	87.8	104.1
			SHC	91.9	112.2	132.4	88.7	108.5	128.3	84	102.9	121.9	77.9	95.5	113.2	71.5	87.8	104.1
		67	TC	125.8	125.8	125.8	119.5	119.5	119.5	111.9	111.9	111.9	102.4	102.4	104.2	92.2	92.2	100.4
			SHC	71.3	91.8	112.3	69	89.6	110.2	66.2	86.9	107.6	62.8	83.5	104.2	59.1	79.7	100.4
		72	TC	136.3	136.3	136.3	130.2	130.2	130.2	123.4	123.4	123.4	115.4	115.4	115.4	105.3	105.3	105.3
			SHC	49.5	69.7	89.8	47.4	67.7	87.9	45.1	65.5	85.9	42.5	63.1	83.7	39.3	60.1	80.9
		76	TC	–	143.1	143.1	–	137.1	137.1	–	130.1	130.1	–	122.6	122.6	–	114.5	114.5
			SHC	–	52.2	73.2	–	50.2	71.1	–	48	68.7	–	45.7	66.4	–	43.3	64.1
4500 Cfm	EA (wb)	58	TC	117.5	117.5	133.8	112.4	112.4	127.9	106	106	120.7	98.4	98.4	112.1	90.3	90.3	103
			SHC	101.3	117.5	133.8	96.8	112.4	127.9	91.2	106	120.7	84.6	98.4	112.1	77.7	90.3	103
		62	TC	117.6	117.6	139.4	112.5	112.5	133.3	106.1	106.1	125.8	98.5	98.5	116.8	90.4	90.4	107.4
			SHC	95.9	117.6	139.4	91.6	112.5	133.3	86.4	106.1	125.8	80.1	98.5	116.8	73.5	90.4	107.4
		67	TC	126.6	126.6	126.6	120.2	120.2	120.2	112.8	112.8	114.8	103.2	103.2	111.6	93	93	107.6
			SHC	73.7	96.4	119.2	71.5	94.3	117.2	68.9	91.8	114.8	65.6	88.6	111.6	61.8	84.7	107.6
		72	TC	136.7	136.7	136.7	130.5	130.5	130.5	123.6	123.6	123.6	115.7	115.7	115.7	105.7	105.7	105.7
			SHC	49.4	71.6	93.7	47.4	69.7	91.9	45.1	67.5	89.9	42.7	65.4	88.2	39.5	62.6	85.8
		76	TC	–	143.1	143.1	–	137	137	–	129.9	129.9	–	122.4	122.4	–	114.3	114.3
			SHC	–	52.4	75.1	–	50.5	73.1	–	48.2	70.8	–	46	68.5	–	43.7	66.5
5000 Cfm	EA (wb)	58	TC	119.9	119.9	136.7	114.7	114.7	130.7	108.4	108.4	123.6	100.6	100.6	114.8	92.3	92.3	105.4
			SHC	103.2	119.9	136.7	98.6	114.7	130.7	93.2	108.4	123.6	86.4	100.6	114.8	79.2	92.3	105.4
		62	TC	120	120	142.4	114.7	114.7	136.2	108.5	108.5	128.8	100.7	100.7	119.7	92.4	92.4	109.9
			SHC	97.6	120	142.4	93.3	114.7	136.2	88.1	108.5	128.8	81.7	100.7	119.7	74.9	92.4	109.9
		67	TC	126.8	126.8	126.8	120.4	120.4	123.6	113.2	113.2	121.3	103.8	103.8	118.4	93.6	93.6	114
			SHC	75.7	100.6	125.4	73.6	98.6	123.6	71.2	96.2	121.3	68	93.2	118.4	64.2	89.1	114
		72	TC	136.5	136.5	136.5	130.2	130.2	130.2	123.2	123.2	123.2	115.5	115.5	115.5	105.6	105.6	105.6
			SHC	49.1	73.1	97	47.1	71.3	95.4	44.9	69.2	93.5	42.5	67.3	92	39.5	64.9	90.2
		76	TC	–	142.7	142.7	–	136.5	136.5	–	129.4	129.4	–	121.6	121.6	–	113.6	113.6
			SHC	–	52.2	76.7	–	50.4	74.7	–	48.2	72.4	–	45.9	70.1	–	43.7	68.3

* See Minimum–Maximum Airflow Ratings in Table 7. Do not operate outside these limits.

LEGEND:

– – Do not operate
Cfm – Cubic feet per minute (supply air)
EAT(db) – Entering air temperature (dry bulb)
EAT(wb) – Entering air temperature (wet bulb)
SHC – Sensible heat capacity
TC – Total capacity

48HC12 (10 TONS) – UNIT WITH HUMIDI–MIZER SYSTEM IN SUBCOOLING MODE										
Temp (F) Air Entering Condenser (Edb)		AIR ENTERING EVAPORATOR – CFM								
		3000			4000			5000		
		Air Entering Evaporator – Ewb (F)								
		72	67	62	72	67	62	72	67	62
75	TC	135.8	123.1	111.6	144.0	130.9	119.2	148.7	135.7	122.9
	SHC	56.7	72.8	88.9	66.1	86.9	107.4	74.4	100.1	121.0
	kW	6.42	6.26	6.13	6.54	6.37	6.22	6.61	6.43	6.26
85	TC	127.3	115.4	104.5	134.9	120.1	111.7	139.3	126.9	116.8
	SHC	48.6	65.4	82.1	57.5	76.6	100.2	65.4	91.8	115.0
	kW	7.20	7.04	6.90	7.31	7.11	7.00	7.38	7.21	7.07
95	TC	118.1	106.5	96.9	125.2	113.6	103.6	129.5	117.8	108.4
	SHC	39.9	57.0	74.9	48.3	70.5	92.4	56.2	83.1	106.8
	kW	8.06	7.89	7.76	8.17	8.00	7.86	8.24	8.07	7.93
105	TC	107.3	97.8	87.8	114.5	103.8	94.5	117.6	107.3	99.0
	SHC	29.6	48.7	66.2	38.1	61.3	83.8	44.9	73.1	97.5
	kW	8.99	8.85	8.72	9.11	8.95	8.82	9.16	9.01	8.88
115	TC	95.7	86.3	78.2	102.1	91.3	83.4	105.7	95.8	88.2
	SHC	18.6	37.8	57.1	26.4	49.4	73.2	33.6	62.3	87.0
	kW	10.03	9.89	9.79	10.14	9.97	9.86	10.20	10.05	9.94
125	TC	83.7	75.2	67.7	87.5	80.1	72.5	92.1	83.1	75.2
	SHC	7.3	27.4	47.2	12.5	38.8	62.9	20.6	50.3	74.2
	kW	11.17	11.06	10.98	11.23	11.13	11.03	11.30	11.17	11.07

48HC12 (10 TONS) – UNIT WITH HUMIDI–MIZER SYSTEM IN HOT GAS REHEAT MODE										
Temp (F) Air Entering Condenser (Edb)		AIR ENTERING EVAPORATOR – Ewb (F)								
		75 Dry Bulb			75 Dry Bulb			75 Dry Bulb		
		62.5 Wet Bulb			64 Wet Bulb			65.3 Wet Bulb		
		(50% Relative)			(56% Relative)			(60% Relative)		
		Air Entering Evaporator – Cfm								
		3000	4000	5000	3000	4000	5000	3000	4000	5000
80	TC	45.83	49.08	50.90	47.62	50.84	52.72	49.16	52.45	54.33
	SHC	4.82	14.45	24.36	–1.60	6.39	14.99	–7.27	–0.59	6.73
	kW	7.33	7.46	7.55	7.40	7.53	7.62	7.46	7.60	7.68
75	TC	48.52	51.89	53.81	50.31	53.74	55.73	51.92	55.47	57.43
	SHC	7.37	17.08	27.08	0.95	9.11	17.81	–4.65	2.25	9.63
	kW	6.93	7.07	7.15	7.00	7.14	7.23	7.06	7.21	7.29
70	TC	51.15	54.66	56.69	52.96	56.60	58.66	54.65	58.34	60.43
	SHC	9.87	19.70	29.80	3.47	11.82	20.57	–2.05	4.98	12.45
	kW	6.56	6.69	6.78	6.62	6.76	6.85	6.68	6.83	6.91
60	TC	52.89	56.41	59.04	55.63	59.10	62.68	58.00	62.31	64.50
	SHC	11.58	21.44	32.07	6.06	14.26	24.41	1.21	8.78	16.36
	kW	6.60	6.80	6.72	6.53	6.71	6.51	6.46	6.48	6.58
50	TC	55.13	59.53	62.75	58.04	62.61	64.69	59.64	64.34	66.41
	SHC	13.77	24.43	35.63	8.41	17.62	26.38	2.80	10.77	18.23
	kW	6.57	6.53	6.44	6.43	6.41	6.54	6.52	6.50	6.64
40	TC	57.08	60.11	64.35	58.75	63.63	65.58	60.16	65.23	69.04
	SHC	15.67	25.05	33.55	9.13	18.64	27.28	3.34	11.67	20.76
	kW	6.51	6.77	6.62	6.64	6.54	6.70	6.75	6.65	6.50

LEGEND

Edb – Entering Dry–Bulb
Ewb – Entering Wet–Bulb
kW – Compressor Motor Power Input
ldb – Leaving Dry–Bulb
lwb – Leaving Wet–Bulb
SHC – Sensible Heat Capacity (1000 Btuh) Gross
TC – Total Capacity (1000 Btuh) Gross

NOTES:

1. Direct interpolation is permissible. Do not extrapolate.
2. The following formulas may be used:

$$t_{ldb} = t_{edb} - \frac{\text{sensible capacity (Btuh)}}{1.10 \times \text{cfm}}$$

t_{lwb} = Wet–bulb temperature corresponding to enthalpy of air leaving evaporator coil (h_{lwb})

$$h_{lwb} = h_{ewb} - \frac{\text{total capacity (Btuh)}}{4.5 \times \text{cfm}}$$

Where: h_{ewb} = Enthalpy of air entering evaporator coil

Table 28 – COOLING CAPACITIES 2-STAGE COOLING 12.5 TONS

48HC*D14				AMBIENT TEMPERATURE														
				85			95			105			115			125		
				EA (dB)			EA (dB)			EA (dB)			EA (dB)			EA (dB)		
				75	80	85	75	80	85	75	80	85	75	80	85	75	80	85
3750 Cfm	EA (wb)	58	TC	131.9	131.9	149.8	127.0	127.0	144.1	121.5	121.5	137.9	115.4	115.4	131.0	108.7	108.7	123.4
			SHC	114.1	131.9	149.8	109.8	127.0	144.1	105.0	121.5	137.9	99.8	115.4	131.0	94.0	108.7	123.4
		62	TC	138.0	138.0	143.4	131.7	131.7	140.4	124.7	124.7	136.9	117.1	117.1	133.1	109.4	109.4	127.4
			SHC	103.4	123.4	143.4	100.4	120.4	140.4	97.1	117.0	136.9	93.4	113.2	133.1	88.8	108.1	127.4
		67	TC	151.5	151.5	151.5	144.5	144.5	144.5	136.9	136.9	136.9	128.5	128.5	128.5	119.4	119.4	119.4
			SHC	85.1	105.2	125.3	82.1	102.2	122.3	78.9	99.0	119.0	75.4	95.5	115.5	71.7	91.8	111.8
		72	TC	166.1	166.1	166.1	158.5	158.5	158.5	150.2	150.2	150.2	141.1	141.1	141.1	131.3	131.3	131.3
			SHC	66.2	86.5	106.7	63.3	83.6	103.8	60.2	80.4	100.6	56.8	76.9	97.1	53.1	73.3	93.4
		76	TC	–	178.6	178.6	–	170.5	170.5	–	161.6	161.6	–	151.8	151.8	–	141.3	141.3
			SHC	–	71.1	91.8	–	68.3	88.9	–	65.2	85.8	–	61.8	82.5	–	58.2	78.7
4375 Cfm	EA (wb)	58	TC	139.2	139.2	158.0	133.8	133.8	151.9	127.9	127.9	145.2	121.3	121.3	137.7	114.1	114.1	129.5
			SHC	120.4	139.2	158.0	115.7	133.8	151.9	110.6	127.9	145.2	104.9	121.3	137.7	98.7	114.1	129.5
		62	TC	142.4	142.4	157.6	135.8	135.8	154.1	128.9	128.9	149.2	121.7	121.7	142.9	114.2	114.2	134.8
			SHC	111.5	134.5	157.6	108.2	131.2	154.1	104.2	126.7	149.2	99.4	121.1	142.9	93.6	114.2	134.8
		67	TC	155.8	155.8	155.8	148.5	148.5	148.5	140.4	140.4	140.4	131.6	131.6	131.6	122.1	122.1	123.0
			SHC	90.3	113.6	136.8	87.3	110.5	133.8	84.0	107.2	130.5	80.4	103.6	126.8	76.6	99.8	123.0
		72	TC	170.6	170.6	170.6	162.7	162.7	162.7	154.0	154.0	154.0	144.4	144.4	144.4	134.1	134.1	134.1
			SHC	68.5	91.9	115.3	65.5	88.9	112.3	62.3	85.6	109.0	58.8	82.1	105.4	55.1	78.4	101.7
		76	TC	–	183.3	183.3	–	174.8	174.8	–	165.4	165.4	–	155.2	155.2	–	144.3	144.3
			SHC	–	74.3	98.3	–	71.3	95.2	–	68.0	91.9	–	64.6	88.3	–	60.9	84.5
5000 Cfm	EA (wb)	58	TC	145.3	145.3	164.9	139.5	139.5	158.4	133.2	133.2	151.2	126.2	126.2	143.2	118.5	118.5	134.5
			SHC	125.6	145.3	164.9	120.7	139.5	158.4	115.2	133.2	151.2	109.1	126.2	143.2	102.5	118.5	134.5
		62	TC	146.5	146.5	169.3	140.2	140.2	163.9	133.3	133.3	157.4	126.3	126.3	149.1	118.6	118.6	140.0
			SHC	118.3	143.8	169.3	114.1	139.0	163.9	109.3	133.3	157.4	103.5	126.3	149.1	97.2	118.6	140.0
		67	TC	159.1	159.1	159.1	151.5	151.5	151.5	143.1	143.1	143.1	134.0	134.0	137.7	124.2	124.2	133.7
			SHC	95.2	121.6	148.0	92.2	118.5	144.9	88.8	115.1	141.5	85.1	111.4	137.7	81.3	107.5	133.7
		72	TC	174.1	174.1	174.1	165.9	165.9	165.9	156.8	156.8	156.8	146.9	146.9	146.9	136.2	136.2	136.2
			SHC	70.5	97.0	123.5	67.5	94.0	120.5	64.2	90.7	117.1	60.6	87.1	113.5	56.9	83.3	109.6
		76	TC	–	187.0	187.0	–	178.1	178.1	–	168.3	168.3	–	157.7	157.7	–	146.4	146.4
			SHC	–	77.0	104.0	–	74.0	100.9	–	70.7	97.5	–	67.2	93.9	–	63.4	90.0
5625 Cfm	EA (wb)	58	TC	150.4	150.4	170.8	144.4	144.4	163.9	137.7	137.7	156.3	130.3	130.3	147.9	122.2	122.2	138.7
			SHC	130.1	150.4	170.8	124.9	144.4	163.9	119.0	137.7	156.3	112.7	130.3	147.9	105.7	122.2	138.7
		62	TC	150.7	150.7	177.9	144.5	144.5	170.6	137.8	137.8	162.7	130.4	130.4	153.9	122.3	122.3	144.4
			SHC	123.5	150.7	177.9	118.4	144.5	170.6	112.9	137.8	162.7	106.8	130.4	153.9	100.2	122.3	144.4
		67	TC	161.7	161.7	161.7	153.9	153.9	155.6	145.3	145.3	152.1	135.9	135.9	148.2	125.9	125.9	143.9
			SHC	100.0	129.4	158.8	96.8	126.2	155.6	93.4	122.7	152.1	89.7	118.9	148.2	85.6	114.8	143.9
		72	TC	176.9	176.9	176.9	168.3	168.3	168.3	159.0	159.0	159.0	148.8	148.8	148.8	137.9	137.9	137.9
			SHC	72.3	101.9	131.5	69.3	98.8	128.4	66.0	95.5	125.0	62.4	91.8	121.3	58.6	88.0	117.4
		76	TC	–	189.8	189.8	–	180.6	180.6	–	170.6	170.6	–	159.7	159.7	–	148.1	148.1
			SHC	–	79.6	109.7	–	76.5	106.5	–	73.2	103.0	–	69.6	99.2	–	65.7	95.1
6250 Cfm	EA (wb)	58	TC	154.8	154.8	175.8	148.5	148.5	168.6	141.5	141.5	160.6	133.7	133.7	151.8	125.3	125.3	142.3
			SHC	133.9	154.8	175.8	128.4	148.5	168.6	122.3	141.5	160.6	115.6	133.7	151.8	108.4	125.3	142.3
		62	TC	155.0	155.0	183.0	148.6	148.6	175.5	141.6	141.6	167.2	133.9	133.9	158.0	125.4	125.4	148.1
			SHC	127.0	155.0	183.0	121.8	148.6	175.5	116.0	141.6	167.2	109.7	133.9	158.0	102.8	125.4	148.1
		67	TC	163.8	163.8	169.3	155.8	155.8	166.0	147.0	147.0	162.3	137.5	137.5	158.1	127.4	127.4	153.3
			SHC	104.5	136.9	169.3	101.3	133.6	166.0	97.8	130.0	162.3	93.9	126.0	158.1	89.7	121.5	153.3
		72	TC	179.1	179.1	179.1	170.3	170.3	170.3	160.8	160.8	160.8	150.3	150.3	150.3	139.2	139.2	139.2
			SHC	74.1	106.7	139.3	71.0	103.6	136.1	67.7	100.2	132.7	64.1	96.5	128.9	60.2	92.6	124.9
		76	TC	–	192.1	192.1	–	182.7	182.7	–	172.3	172.3	–	161.2	161.2	–	149.4	149.4
			SHC	–	82.1	115.1	–	79.0	111.8	–	75.6	108.2	–	71.9	104.3	–	67.9	100.0

* See Minimum – Maximum Airflow Ratings in Table 7. Do not operate outside these limits.

LEGEND:

– – Do not operate
Cfm – Cubic feet per minute (supply air)
EAT(db) – Entering air temperature (dry bulb)
EAT(wb) – Entering air temperature (wet bulb)
SHC – Sensible heat capacity
TC – Total capacity

48HC14 (12.5 TONS) – UNIT WITH HUMIDI–MIZER SYSTEM IN SUBCOOLING MODE										
Temp (F) Air Entering Condenser (Edb)		AIR ENTERING EVAPORATOR – CFM								
		3750			5000			6250		
		Air Entering Evaporator – Ewb (F)								
		72	67	62	72	67	62	72	67	62
75	TC	162.0	147.4	132.8	185.6	167.2	148.8	209.5	187.2	164.9
	SHC	85.0	101.4	117.4	96.9	113.0	129.0	106.5	122.4	138.4
	kW	7.70	7.60	7.30	7.90	7.70	7.40	8.10	7.80	7.50
85	TC	154.8	140.9	127.0	171.7	154.4	137.1	188.8	168.0	147.2
	SHC	70.2	90.4	110.6	83.1	103.2	123.2	93.4	113.4	133.3
	kW	8.80	8.70	8.30	8.90	8.70	8.40	9.10	8.80	8.50
95	TC	147.5	134.4	121.2	157.8	141.6	125.4	168.1	148.8	129.6
	SHC	55.5	79.7	103.9	69.3	93.4	117.5	80.4	104.3	128.3
	kW	9.80	9.70	9.30	9.90	9.70	9.50	10.10	9.80	9.60
105	TC	140.3	127.8	115.4	143.8	128.7	113.7	147.4	129.7	111.9
	SHC	40.9	69.0	97.2	55.5	83.6	111.7	67.3	95.3	111.9
	kW	10.80	10.70	10.30	10.90	10.70	10.50	11.10	10.80	10.60
115	TC	133.0	121.3	109.5	129.9	115.9	101.9	126.7	110.5	94.2
	SHC	26.2	58.3	90.4	41.8	73.8	101.9	54.2	86.2	94.2
	kW	11.80	11.70	11.40	11.90	11.70	11.60	12.10	11.80	11.70
125	TC	125.8	114.7	103.7	115.9	103.1	90.2	106.0	91.3	76.6
	SHC	11.5	47.6	83.7	28.0	64.0	90.2	41.2	77.2	76.6
	kW	12.80	12.70	12.40	12.90	12.70	12.60	13.10	12.80	12.70

48HC14 (12.5 TONS) – UNIT WITH HUMIDI–MIZER SYSTEM IN HOT GAS REHEAT MODE										
Temp (F) Air Entering Condenser (Edb)		AIR ENTERING EVAPORATOR – Ewb (F)								
		75 Dry Bulb			75 Dry Bulb			75 Dry Bulb		
		62.5 Wet Bulb			64 Wet Bulb			65.3 Wet Bulb		
		(50% Relative)			(56% Relative)			(60% Relative)		
		Air Entering Evaporator – Cfm								
		3750	5000	6250	3750	5000	6250	3750	5000	6250
80	TC	57.70	60.00	66.40	60.20	66.80	69.50	64.30	69.10	72.30
	SHC	21.30	27.00	44.00	12.80	22.40	32.50	8.60	16.20	25.50
	kW	8.08	8.15	8.23	8.28	8.34	8.37	8.36	8.43	8.52
75	TC	59.00	61.20	67.90	61.40	68.10	71.00	65.80	70.70	73.70
	SHC	22.40	28.10	44.80	13.50	23.50	33.70	9.30	17.10	26.30
	kW	8.06	8.13	8.21	8.25	8.31	8.34	8.33	8.40	8.49
70	TC	60.40	62.90	69.20	63.10	69.40	72.50	67.00	72.00	75.00
	SHC	23.20	28.90	46.00	14.50	24.30	34.40	10.30	17.90	27.40
	kW	8.04	8.11	8.18	8.23	8.29	8.32	8.31	8.38	8.47
60	TC	63.40	65.70	72.00	65.90	72.30	75.20	70.00	74.80	77.80
	SHC	24.80	30.50	47.80	16.10	25.90	36.00	11.90	19.60	29.00
	kW	8.00	8.07	8.15	8.20	8.25	8.29	8.28	8.35	8.44
50	TC	66.20	68.60	74.30	68.80	74.60	78.20	72.80	77.80	80.70
	SHC	26.60	32.30	49.40	17.70	27.70	37.80	13.50	21.20	30.60
	kW	7.94	8.01	8.08	8.13	8.20	8.23	8.22	8.29	8.38
40	TC	69.10	71.60	77.80	71.80	78.00	81.00	75.70	80.60	83.70
	SHC	28.20	33.90	50.10	19.40	29.30	39.80	15.20	22.90	32.20
	kW	7.90	7.97	8.04	8.09	8.15	8.17	8.16	8.23	8.32

LEGEND

Edb – Entering Dry–Bulb
Ewb – Entering Wet–Bulb
kW – Compressor Motor Power Input
ldb – Leaving Dry–Bulb
lwb – Leaving Wet–Bulb
SHC – Sensible Heat Capacity (1000 Btuh) Gross
TC – Total Capacity (1000 Btuh) Gross

NOTES:

1. Direct interpolation is permissible. Do not extrapolate.
2. The following formulas may be used:

$$t_{ldb} = t_{edb} - \frac{\text{sensible capacity (Btuh)}}{1.10 \times \text{cfm}}$$

t_{lwb} = Wet–bulb temperature corresponding to enthalpy of air leaving evaporator coil (h_{lwb})

$$h_{lwb} = h_{ewb} - \frac{\text{total capacity (Btuh)}}{4.5 \times \text{cfm}}$$

Where: h_{ewb} = Enthalpy of air entering evaporator coil

Table 30 – STATIC PRESSURE ADDERS (IN. WG) (FACTORY OPTIONS AND/OR ACCESSORIES)

Humidi-MiZer

3–6 TONS									
CFM (in. wg)	1000	1250	1500	1750	2000	2250	2500	2750	3000
3 Tons	0.04	0.052	0.07	–	–	–	–	–	–
4 Tons	–	0.106	0.138	0.172	0.21	–	–	–	–
5 Tons	–	–	0.138	0.172	0.21	0.252	0.30	–	–
6 Tons	–	–	–	0.112	0.125	0.161	0.19	0.22	0.25

	7.5–12.5 TONS									
CFM (in. wg)	4000	4250	4500	4750	5000	5250	5500	5750	6000	6250
7.5 Tons	–	–	–	–	–	–	–	–	–	–
8.5 Tons	0.20	0.22	–	–	–	–	–	–	–	–
10 Tons	0.20	0.22	0.24	0.26	0.28	–	–	–	–	–
12.5 Tons	0.06	0.07	0.07	0.08	0.08	0.09	0.10	0.10	0.11	0.12

ECONOMIZER, BAROMETRIC RELIEF AND PE PERFORMANCE

Vertical Application

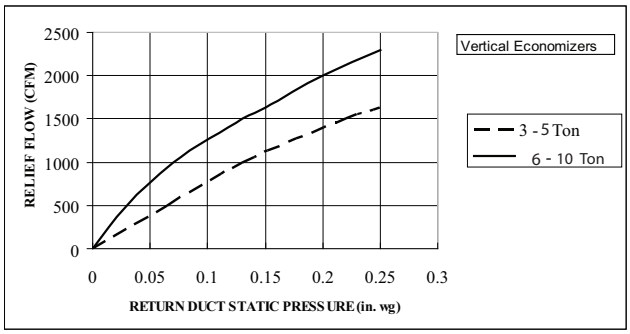

C10475

Fig. 16 - Barometric Relief Flow-Vertical 3-10 Ton

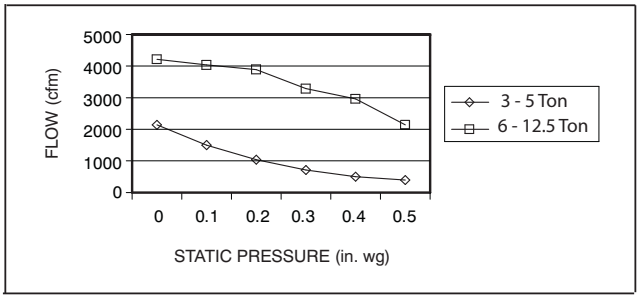

C10996

Fig. 18 - Vertical Power Exhaust Performance

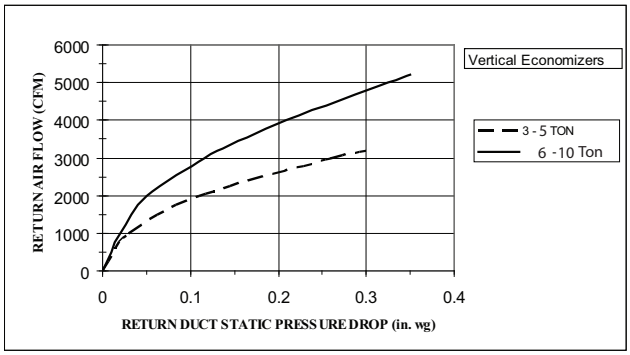

C10477

Fig. 17 - Return Air Pressure Drop-Vertical 3-10 Ton

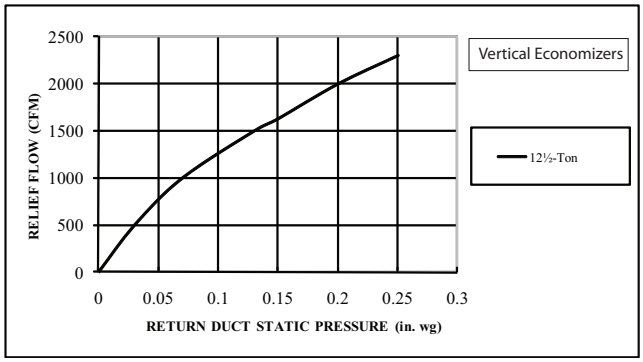

C101004

Fig. 19 - Barometric Relief Flow-Vertical 12.5 Ton

Vertical Application (cont.)

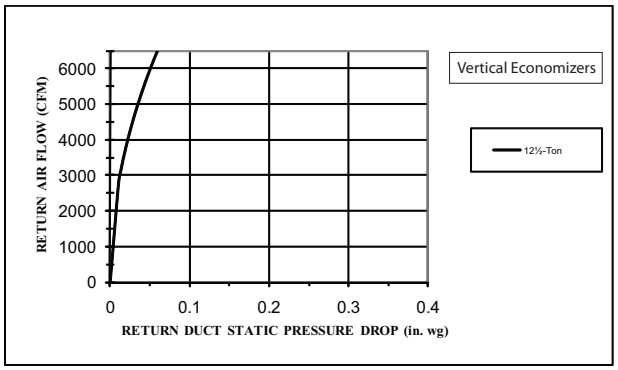

C101005

Fig. 20 - Return Air Pressure Drop-Vertical 12.5 Ton

Horizontal Application

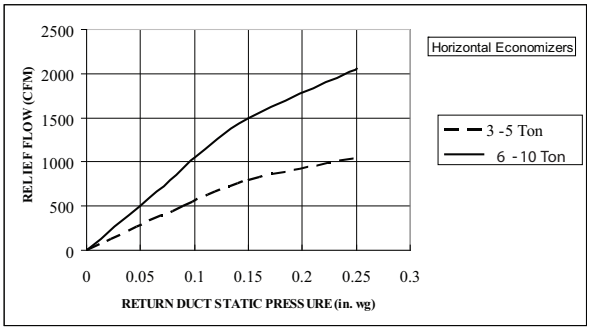

C10472

Fig. 21 - Barometric Relief Flow-Horizontal 3-10 Ton

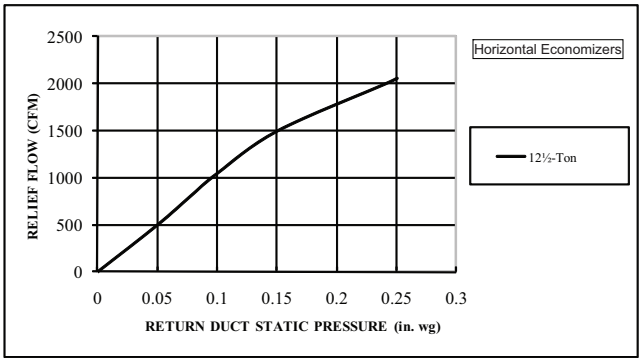

C101002

Fig. 23 - Barometric Relief Flow-Horizontal 12.5 Ton

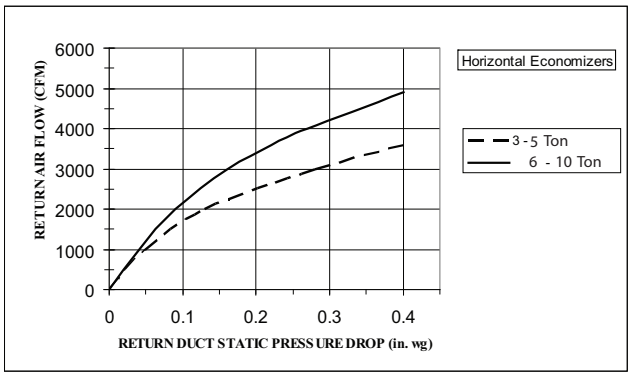

C10474

Fig. 22 - Return Air Pressure Drop-Horizontal 3-10 Ton

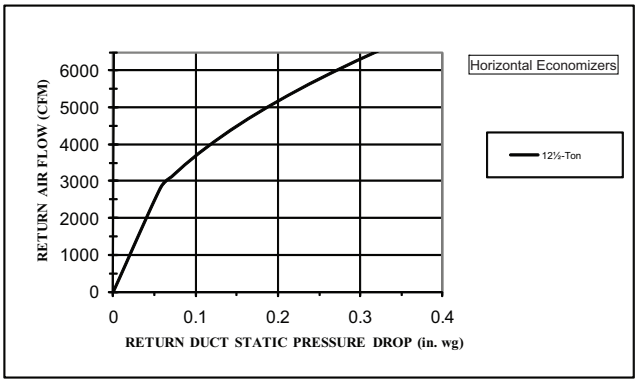

C101003

Fig. 24 - Return Air Pressure Drop-Horizontal-12.5 Ton

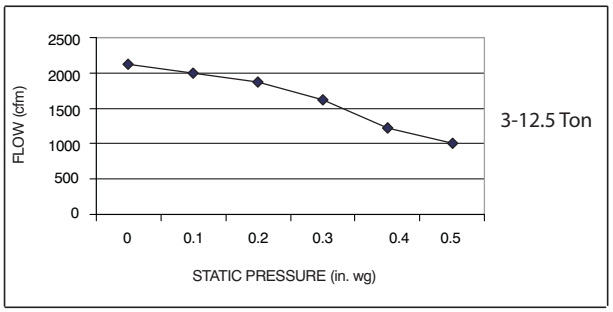

C10995

Fig. 25 - Horizontal Power Exhaust Performance

GENERAL FAN PERFORMANCE NOTES:

1. Interpolation is permissible. Do not extrapolate.
2. External static pressure is the static pressure difference between the return duct and the supply duct plus the static pressure caused by any FIOPs or accessories.
3. Tabular data accounts for pressure loss due to clean filters, unit casing, and wet coils. Factory options and accessories may add static pressure losses. Selection software is available, through your salesperson, to help you select the best motor/drive combination for your application.
4. The Fan Performance tables offer motor/drive recommendations. In cases when two motor/drive combinations would work, Carrier recommended the lower horsepower option.
5. For information on the electrical properties of Carrier motors, please see the Electrical information section of this book.
6. For more information on the performance limits of Carrier motors, see the application data section of this book.
7. The EPACT (Energy Policy Act of 1992) regulates energy requirements for specific types of indoor fan motors. Motors regulated by EPACT include any general purpose, T-frame (three-digit, 143 and larger), single-speed, foot mounted, polyphase, squirrel cage induction motors of NEMA (National Electrical Manufacturers Association) design A and B, manufactured for use in the United States. Ranging from 1 to 200 Hp, these continuous-duty motors operate on 230 and 460 volt, 60 Hz power. If a motor does not fit into these specifications, the motor does not have to be replaced by an EPACT compliant energy-efficient motor. Variable-speed motors are exempt from EPACT compliance requirements.

FAN PERFORMANCE (BELT DRIVE)

Table 31 – 48HC04** **3 PHASE NON-HUMIDI-MIZER** **3 TON VERTICAL SUPPLY**

CFM	Available External Static Pressure (in. wg)									
	0.2		0.4		0.6		0.8		1.0	
	RPM	BHP	RPM	BHP	RPM	BHP	RPM	BHP	RPM	BHP
900	**592**	**0.14**	**721**	**0.25**	826	0.38	916	0.53	997	0.69
975	**616**	**0.17**	**744**	**0.28**	847	0.41	936	0.56	1016	0.72
1050	**641**	**0.19**	**766**	**0.30**	868	0.44	957	0.59	1036	0.76
1125	**667**	**0.22**	790	0.33	890	0.47	978	0.63	1056	0.80
1200	**693**	**0.25**	813	0.37	913	0.51	999	0.67	1077	0.84
1275	**720**	**0.29**	837	0.41	935	0.55	1021	0.71	1098	0.88
1350	**747**	**0.33**	862	0.45	958	0.60	1043	0.76	1119	0.94
1425	775	0.37	887	0.50	982	0.65	1066	0.81	1141	0.99
1500	802	0.42	912	0.55	1006	0.70	1088	0.87	1163	1.05

CFM	Available External Static Pressure (in. wg)									
	1.2		1.4		1.6		1.8		2.0	
	RPM	BHP	RPM	BHP	RPM	BHP	RPM	BHP	RPM	BHP
900	1070	0.88	1137	1.07	1201	1.29	1260	1.51	1317	1.75
975	1089	0.91	1156	1.11	1219	1.32	1279	1.54	1335	1.78
1050	1108	0.94	1175	1.14	1238	1.36	1297	1.58	1353	1.82
1125	1128	0.98	1195	1.18	1257	1.40	1316	1.62	1372	1.86
1200	1148	1.03	1214	1.23	1276	1.44	1335	1.67	1391	1.91
1275	1169	1.07	1235	1.28	1296	1.50	1354	1.72	1410	1.97
1350	1190	1.13	1255	1.33	1316	1.55	1374	1.78	1429	2.03
1425	1211	1.19	1276	1.39	1337	1.61	1394	1.85	1449	2.09
1500	1232	1.25	1297	1.46	1357	1.68	1415	1.91	**1469**	**2.16**

NOTE: For more information, see General Fan Performance Notes.
Boldface indicates field–supplied drive is required.

Medium static 770–1175 RPM, 1.7 BHP max
High static 1035–1466 RPM, 2.4 BHP max

Table 32 – 48HC04** **3 PHASE HUMIDI-MIZER** **3 TON VERTICAL SUPPLY**

CFM	Available External Static Pressure (in. wg)									
	0.2		0.4		0.6		0.8		1.0	
	RPM	BHP	RPM	BHP	RPM	BHP	RPM	BHP	RPM	BHP
900	592	0.14	721	0.25	826	0.38	916	0.53	997	0.69
975	616	0.17	744	0.28	847	0.41	936	0.56	1016	0.72
1050	641	0.19	766	0.30	868	0.44	957	0.59	1036	0.76
1125	667	0.22	790	0.33	890	0.47	978	0.63	1056	0.80
1200	693	0.25	813	0.37	913	0.51	999	0.67	1077	0.84
1275	720	0.29	837	0.41	935	0.55	1021	0.71	1098	0.88
1350	747	0.33	862	0.45	958	0.60	1043	0.76	1119	0.94
1425	775	0.37	887	0.50	982	0.65	1066	0.81	1141	0.99
1500	802	0.42	912	0.55	1006	0.70	1088	0.87	1163	1.05

CFM	Available External Static Pressure (in. wg)									
	1.2		1.4		1.6		1.8		2.0	
	RPM	BHP	RPM	BHP	RPM	BHP	RPM	BHP	RPM	BHP
900	1070	0.88	1137	1.07	1201	1.29	1260	1.51	1317	1.75
975	1089	0.91	1156	1.11	1219	1.32	1279	1.54	1335	1.78
1050	1108	0.94	1175	1.14	1238	1.36	1297	1.58	1353	1.82
1125	1128	0.98	1195	1.18	1257	1.40	1316	1.62	1372	1.86
1200	1148	1.03	1214	1.23	1276	1.44	1335	1.67	1391	1.91
1275	1169	1.07	1235	1.28	1296	1.50	1354	1.72	1410	1.97
1350	1190	1.13	1255	1.33	1316	1.55	1374	1.78	1429	2.03
1425	1211	1.19	1276	1.39	1337	1.61	1394	1.85	1449	2.09
1500	1232	1.25	1297	1.46	1357	1.68	1415	1.91	**1469**	**2.16**

NOTE: For more information, see General Fan Performance Notes.
Boldface indicates field–supplied drive is required.

Standard static 560–854 RPM, 1.7 BHP max
Medium static 770–1175 RPM, 1.7 BHP max
High static 1035–1466 RPM, 2.4 BHP max

FAN PERFORMANCE (BELT DRIVE) cont.

Table 33 – 48HC04** **3 PHASE NON-HUMIDI-MIZER** **3 TON HORIZONTAL SUPPLY**

CFM	Available External Static Pressure (in. wg)									
	0.2		0.4		0.6		0.8		1.0	
	RPM	BHP	RPM	BHP	RPM	BHP	RPM	BHP	RPM	BHP
900	**582**	**0.14**	**715**	**0.24**	825	0.35	921	0.48	1007	0.63
975	**606**	**0.16**	**735**	**0.26**	843	0.38	938	0.51	1023	0.66
1050	**630**	**0.18**	**756**	**0.29**	862	0.41	955	0.55	1040	0.70
1125	**655**	**0.21**	778	0.32	882	0.45	974	0.58	1057	0.74
1200	**681**	**0.24**	800	0.35	902	0.48	992	0.63	1074	0.78
1275	**708**	**0.27**	823	0.39	923	0.53	1012	0.67	1093	0.83
1350	**735**	**0.31**	847	0.43	945	0.57	1032	0.72	1112	0.88
1425	**762**	**0.35**	871	0.48	967	0.62	1053	0.77	1131	0.94
1500	790	0.40	896	0.53	990	0.67	1074	0.83	1151	1.00

CFM	Available External Static Pressure (in. wg)									
	1.2		1.4		1.6		1.8		2.0	
	RPM	BHP	RPM	BHP	RPM	BHP	RPM	BHP	RPM	BHP
900	1086	0.79	1159	0.96	1228	1.14	1293	1.33	1354	1.53
975	1101	0.82	1174	0.99	1242	1.18	1306	1.37	1367	1.57
1050	1117	0.86	1189	1.03	1256	1.22	1320	1.41	1381	1.62
1125	1133	0.90	1204	1.08	1271	1.26	1335	1.46	1395	1.67
1200	1150	0.95	1221	1.13	1287	1.31	1350	1.51	1410	1.72
1275	1168	1.00	1237	1.18	1303	1.37	1365	1.57	1425	1.78
1350	1186	1.05	1255	1.24	1320	1.43	1382	1.63	1441	1.84
1425	1204	1.11	1272	1.30	1337	1.49	1398	1.70	1457	1.91
1500	1223	1.18	1291	1.36	1355	1.56	1415	1.77	**1473**	**1.99**

NOTE: For more information, see General Fan Performance Notes.
Boldface indicates field–supplied drive is required.

Medium static 770–1175 RPM, 1.7 BHP max
High static 1035–1466 RPM, 2.4 BHP max

Table 34 – 48HC04** **3 PHASE HUMIDI-MIZER** **3 TON HORIZONTAL SUPPLY**

CFM	Available External Static Pressure (in. wg)									
	0.2		0.4		0.6		0.8		1.0	
	RPM	BHP	RPM	BHP	RPM	BHP	RPM	BHP	RPM	BHP
900	582	0.14	715	0.24	825	0.35	921	0.48	1007	0.63
975	606	0.16	735	0.26	843	0.38	938	0.51	1023	0.66
1050	630	0.18	756	0.29	862	0.41	955	0.55	1040	0.70
1125	655	0.21	778	0.32	882	0.45	974	0.58	1057	0.74
1200	681	0.24	800	0.35	902	0.48	992	0.63	1074	0.78
1275	708	0.27	823	0.39	923	0.53	1012	0.67	1093	0.83
1350	735	0.31	847	0.43	945	0.57	1032	0.72	1112	0.88
1425	762	0.35	871	0.48	967	0.62	1053	0.77	1131	0.94
1500	790	0.40	896	0.53	990	0.67	1074	0.83	1151	1.00

CFM	Available External Static Pressure (in. wg)									
	1.2		1.4		1.6		1.8		2.0	
	RPM	BHP	RPM	BHP	RPM	BHP	RPM	BHP	RPM	BHP
900	1086	0.79	1159	0.96	1228	1.14	1293	1.33	1354	1.53
975	1101	0.82	1174	0.99	1242	1.18	1306	1.37	1367	1.57
1050	1117	0.86	1189	1.03	1256	1.22	1320	1.41	1381	1.62
1125	1133	0.90	1204	1.08	1271	1.26	1335	1.46	1395	1.67
1200	1150	0.95	1221	1.13	1287	1.31	1350	1.51	1410	1.72
1275	1168	1.00	1237	1.18	1303	1.37	1365	1.57	1425	1.78
1350	1186	1.05	1255	1.24	1320	1.43	1382	1.63	1441	1.84
1425	1204	1.11	1272	1.30	1337	1.49	1398	1.70	1457	1.91
1500	1223	1.18	1291	1.36	1355	1.56	1415	1.77	**1473**	**1.99**

NOTE: For more information, see General Fan Performance Notes.
Boldface indicates field–supplied drive is required.

Standard static 560–864 RPM, 1.7 BHP max
Medium static 770–1175 RPM, 1.7 BHP max
High static 1035–1466 RPM, 2.4 BHP max

FAN PERFORMANCE (BELT DRIVE) cont.

Table 35 – 48HC05** | **3 PHASE NON-HUMIDI-MIZER** | **4 TON VERTICAL SUPPLY**

CFM	Available External Static Pressure (in. wg)									
	0.2		0.4		0.6		0.8		1.0	
	RPM	BHP	RPM	BHP	RPM	BHP	RPM	BHP	RPM	BHP
1200	**693**	**0.25**	**813**	**0.37**	**913**	**0.51**	999	0.67	1077	0.84
1300	**729**	**0.30**	**846**	**0.42**	943	0.57	1028	0.73	1105	0.90
1400	**765**	**0.35**	**879**	**0.48**	974	0.63	1058	0.79	1134	0.97
1500	**802**	**0.42**	**912**	**0.55**	1006	0.70	1088	0.87	1163	1.05
1600	**840**	**0.49**	947	0.63	1038	0.78	1119	0.95	1193	1.14
1700	**878**	**0.57**	982	0.71	1071	0.87	1151	1.05	1224	1.24
1800	**917**	**0.65**	1017	0.81	1105	0.97	1183	1.15	1255	1.35
1900	956	0.75	1053	0.91	1139	1.08	1216	1.27	1287	1.47
2000	995	0.86	1090	1.02	1173	1.20	1249	1.39	1319	1.59

CFM	Available External Static Pressure (in. wg)									
	1.2		1.4		1.6		1.8		2.0	
	RPM	BHP	RPM	BHP	RPM	BHP	RPM	BHP	RPM	BHP
1200	1148	1.03	1214	1.23	1276	1.44	1335	1.67	1391	1.91
1300	1176	1.09	1241	1.30	1303	1.51	1361	1.74	1416	1.98
1400	1204	1.17	1269	1.37	1330	1.59	1388	1.82	1442	2.07
1500	1232	1.25	1297	1.46	1357	1.68	1415	1.91	1469	2.16
1600	1262	1.34	1325	1.55	1385	1.78	1442	2.01	1496	2.26
1700	1291	1.44	1354	1.66	1414	1.89	1470	2.12	1524	2.37
1800	1322	1.55	1384	1.77	1443	2.00	1499	2.25	1552	2.50
1900	1352	1.68	1414	1.90	1472	2.13	1528	2.38	1580	2.63
2000	1384	1.81	1445	2.04	1502	2.27	1557	2.52	1609	2.78

NOTE: For more information, see General Fan Performance Notes.
Boldface indicates field–supplied drive is required.

Medium static 920–1303 RPM, 1.7 BHP max
High static 1208–1639 RPM, 2.9 BHP max

Table 36 – 48HC05** | **3 PHASE HUMIDI-MIZER** | **4 TON VERTICAL SUPPLY**

CFM	Available External Static Pressure (in. wg)									
	0.2		0.4		0.6		0.8		1.0	
	RPM	BHP	RPM	BHP	RPM	BHP	RPM	BHP	RPM	BHP
1200	693	0.25	813	0.37	913	0.51	999	0.67	1077	0.84
1300	729	0.30	846	0.42	943	0.57	1028	0.73	1105	0.90
1400	765	0.35	879	0.48	974	0.63	1058	0.79	1134	0.97
1500	802	0.42	912	0.55	1006	0.70	1088	0.87	1163	1.05
1600	840	0.49	947	0.63	1038	0.78	1119	0.95	1193	1.14
1700	878	0.57	982	0.71	1071	0.87	1151	1.05	1224	1.24
1800	917	0.65	1017	0.81	1105	0.97	1183	1.15	1255	1.35
1900	956	0.75	1053	0.91	1139	1.08	1216	1.27	1287	1.47
2000	995	0.86	1090	1.02	1173	1.20	1249	1.39	1319	1.59

CFM	Available External Static Pressure (in. wg)									
	1.2		1.4		1.6		1.8		2.0	
	RPM	BHP	RPM	BHP	RPM	BHP	RPM	BHP	RPM	BHP
1200	1148	1.03	1214	1.23	1276	1.44	1335	1.67	1391	1.91
1300	1176	1.09	1241	1.30	1303	1.51	1361	1.74	1416	1.98
1400	1204	1.17	1269	1.37	1330	1.59	1388	1.82	1442	2.07
1500	1232	1.25	1297	1.46	1357	1.68	1415	1.91	1469	2.16
1600	1262	1.34	1325	1.55	1385	1.78	1442	2.01	1496	2.26
1700	1291	1.44	1354	1.66	1414	1.89	1470	2.12	1524	2.37
1800	1322	1.55	1384	1.77	1443	2.00	1499	2.25	1552	2.50
1900	1352	1.68	1414	1.90	1472	2.13	1528	2.38	1580	2.63
2000	1384	1.81	1445	2.04	1502	2.27	1557	2.52	1609	2.78

NOTE: For more information, see General Fan Performance Notes.

Standard static 560–854 RPM, 1.7 BHP max
Medium static 770–1175 RPM, 1.7 BHP max
High static 1208–1639 RPM, 2.9 BHP max

FAN PERFORMANCE (BELT DRIVE) cont.

Table 37 – 48HC05** **3 PHASE NON-HUMIDI-MIZER** **4 TON HORIZONTAL SUPPLY**

CFM	Available External Static Pressure (in. wg)									
	0.2		0.4		0.6		0.8		1.0	
	RPM	BHP	RPM	BHP	RPM	BHP	RPM	BHP	RPM	BHP
1200	**681**	**0.24**	**800**	**0.35**	**902**	**0.48**	992	0.63	1074	0.78
1300	**717**	**0.29**	**831**	**0.41**	930	0.54	1019	0.69	1099	0.85
1400	**753**	**0.34**	**863**	**0.46**	959	0.60	1046	0.75	1125	0.92
1500	**790**	**0.40**	**896**	**0.53**	990	0.67	1074	0.83	1151	1.00
1600	**828**	**0.46**	930	0.60	1021	0.75	1103	0.91	1179	1.09
1700	**866**	**0.54**	964	0.68	1053	0.84	1133	1.01	1207	1.18
1800	**905**	**0.62**	1000	0.77	1085	0.94	1164	1.11	1236	1.29
1900	944	0.71	1036	0.87	1119	1.04	1195	1.22	1266	1.41
2000	984	0.82	1072	0.98	1153	1.15	1227	1.34	1297	1.53

CFM	Available External Static Pressure (in. wg)									
	1.2		1.4		1.6		1.8		2.0	
	RPM	BHP	RPM	BHP	RPM	BHP	RPM	BHP	RPM	BHP
1200	1150	0.95	1221	1.13	1287	1.31	1350	1.51	1410	1.72
1300	1173	1.02	1243	1.20	1309	1.39	1371	1.59	1430	1.80
1400	1198	1.09	1266	1.28	1331	1.47	1393	1.68	1451	1.89
1500	1223	1.18	1291	1.36	1355	1.56	1415	1.77	1473	1.99
1600	1249	1.27	1316	1.46	1379	1.66	1439	1.87	1496	2.09
1700	1277	1.37	1342	1.57	1404	1.77	1463	1.99	1520	2.21
1800	1305	1.48	1369	1.68	1430	1.89	1489	2.11	1545	2.34
1900	1333	1.60	1397	1.81	1457	2.02	1514	2.25	1570	2.48
2000	1363	1.73	1425	1.94	1484	2.16	1541	2.39	1596	2.63

NOTE: For more information, see General Fan Performance Notes.
Boldface indicates field–supplied drive is required.
Medium static 920–1303 RPM, 1.7 BHP max
High static 1208–1639 RPM, 2.9 BHP max

Table 38 – 48HC05** **3 PHASE HUMIDI-MIZER** **4 TON HORIZONTAL SUPPLY**

CFM	Available External Static Pressure (in. wg)									
	0.2		0.4		0.6		0.8		1.0	
	RPM	BHP	RPM	BHP	RPM	BHP	RPM	BHP	RPM	BHP
1200	681	0.24	800	0.35	902	0.48	992	0.63	1074	0.78
1300	717	0.29	831	0.41	930	0.54	1019	0.69	1099	0.85
1400	753	0.34	863	0.46	959	0.60	1046	0.75	1125	0.92
1500	790	0.40	896	0.53	990	0.67	1074	0.83	1151	1.00
1600	828	0.46	930	0.60	1021	0.75	1103	0.91	1179	1.09
1700	866	0.54	964	0.68	1053	0.84	1133	1.01	1207	1.18
1800	905	0.62	1000	0.77	1085	0.94	1164	1.11	1236	1.29
1900	944	0.71	1036	0.87	1119	1.04	1195	1.22	1266	1.41
2000	984	0.82	1072	0.98	1153	1.15	1227	1.34	1297	1.53

CFM	Available External Static Pressure (in. wg)									
	1.2		1.4		1.6		1.8		2.0	
	RPM	BHP	RPM	BHP	RPM	BHP	RPM	BHP	RPM	BHP
1200	1150	0.95	1221	1.13	1287	1.31	1350	1.51	1410	1.72
1300	1173	1.02	1243	1.20	1309	1.39	1371	1.59	1430	1.80
1400	1198	1.09	1266	1.28	1331	1.47	1393	1.68	1451	1.89
1500	1223	1.18	1291	1.36	1355	1.56	1415	1.77	1473	1.99
1600	1249	1.27	1316	1.46	1379	1.66	1439	1.87	1496	2.09
1700	1277	1.37	1342	1.57	1404	1.77	1463	1.99	1520	2.21
1800	1305	1.48	1369	1.68	1430	1.89	1489	2.11	1545	2.34
1900	1333	1.60	1397	1.81	1457	2.02	1514	2.25	1570	2.48
2000	1363	1.73	1425	1.94	1484	2.16	1541	2.39	1596	2.63

NOTE: For more information, see General Fan Performance Notes.
Standard static 560–854 RPM, 1.7 BHP max
Medium static 770–1175 RPM, 1.7 BHP max
High static 1208–1639 RPM, 2.9 BHP max

FAN PERFORMANCE (BELT DRIVE) cont.

Table 39 – 48HC06** **3 PHASE NON-HUMIDI-MIZER** **5 TON VERTICAL SUPPLY**

CFM	Available External Static Pressure (in. wg)									
	0.2		0.4		0.6		0.8		1.0	
	RPM	BHP	RPM	BHP	RPM	BHP	RPM	BHP	RPM	BHP
1500	**847**	**0.41**	966	0.55	1067	0.68	1158	0.81	1240	0.93
1625	**896**	**0.50**	1010	0.65	1109	0.79	1198	0.93	1278	1.07
1750	**947**	**0.59**	1056	0.76	1152	0.92	1238	1.07	1318	1.22
1875	**998**	**0.70**	1103	0.88	1196	1.05	1280	1.22	1358	1.38
2000	1049	0.82	1151	1.02	1241	1.20	1323	1.38	1399	1.56
2125	1102	0.96	1199	1.17	1287	1.37	1367	1.56	1441	1.75
2250	1154	1.11	1248	1.33	1333	1.55	1411	1.75	1484	1.96
2375	1208	1.28	1298	1.52	1381	1.74	1457	1.96	1528	2.18
2500	1261	1.47	1349	1.72	1429	1.96	1503	2.19	1572	2.42

CFM	Available External Static Pressure (in. wg)									
	1.2		1.4		1.6		1.8		2.0	
	RPM	BHP	RPM	BHP	RPM	BHP	RPM	BHP	RPM	BHP
1500	1316	1.05	1387	1.17	1454	1.28	1517	1.39	1578	1.50
1625	1353	1.20	1423	1.33	1489	1.46	1552	1.58	1611	1.70
1750	1391	1.36	1460	1.51	1525	1.65	1587	1.78	1646	1.91
1875	1430	1.54	1498	1.70	1562	1.85	1623	2.00	1681	2.14
2000	1470	1.73	1537	1.90	1600	2.06	1660	2.23	**1718**	**2.38**
2125	1511	1.93	1576	2.12	1639	2.29	**1698**	**2.47**	**1755**	**2.64**
2250	1552	2.15	1617	2.35	1678	2.54	**1737**	**2.73**	1793	2.92
2375	1595	2.39	1658	2.60	**1718**	**2.80**	1776	3.01	–	–
2500	1638	2.64	**1700**	**2.87**	1760	3.08	–	–	–	–

NOTE: For more information, see General Fan Performance Notes.
Boldface indicates field–supplied drive is required.
Medium static 1035–1466 RPM, 2.4 BHP max
High static 1303 – 1687 RPM, 2.9 BHP max

Table 40 – 48HC06** **3 PHASE HUMIDI-MIZER** **5 TON VERTICAL SUPPLY**

CFM	Available External Static Pressure (in. wg)									
	0.2		0.4		0.6		0.8		1.0	
	RPM	BHP	RPM	BHP	RPM	BHP	RPM	BHP	RPM	BHP
1500	847	0.41	966	0.55	1067	0.68	1158	0.81	1240	0.93
1625	896	0.50	1010	0.65	1109	0.79	1198	0.93	1278	1.07
1750	947	0.59	1056	0.76	1152	0.92	1238	1.07	1318	1.22
1875	998	0.70	1103	0.88	1196	1.05	1280	1.22	1358	1.38
2000	1049	0.82	1151	1.02	1241	1.20	1323	1.38	1399	1.56
2125	1102	0.96	1199	1.17	1287	1.37	1367	1.56	1441	1.75
2250	1154	1.11	1248	1.33	1333	1.55	1411	1.75	1484	1.96
2375	1208	1.28	1298	1.52	1381	1.74	1457	1.96	1528	2.18
2500	1261	1.47	1349	1.72	1429	1.96	1503	2.19	1572	2.42

CFM	Available External Static Pressure (in. wg)									
	1.2		1.4		1.6		1.8		2.0	
	RPM	BHP	RPM	BHP	RPM	BHP	RPM	BHP	RPM	BHP
1500	1316	1.05	1387	1.17	1454	1.28	1517	1.39	1578	1.50
1625	1353	1.20	1423	1.33	1489	1.46	1552	1.58	1611	1.70
1750	1391	1.36	1460	1.51	1525	1.65	1587	1.78	1646	1.91
1875	1430	1.54	1498	1.70	1562	1.85	1623	2.00	1681	2.14
2000	1470	1.73	1537	1.90	1600	2.06	1660	2.23	**1718**	**2.38**
2125	1511	1.93	1576	2.12	1639	2.29	**1698**	**2.47**	**1755**	**2.64**
2250	1552	2.15	1617	2.35	1678	2.54	**1737**	**2.73**	**1793**	**2.92**
2375	1595	2.39	1658	2.60	**1718**	**2.80**	**1776**	**3.01**	**–**	**–**
2500	1638	2.64	**1700**	**2.87**	**1760**	**3.08**	**–**	**–**	**–**	**–**

NOTE: For more information, see General Fan Performance Notes.
Boldface indicates field–supplied drive is required.
Standard static 770–1175 RPM, 1.7 BHP max
Medium static 1035–1466 RPM, 2.4 BHP max
High static 1303–1687 RPM, 2.9 BHP max

FAN PERFORMANCE (BELT DRIVE) cont.

Table 41 – 48HC06** **3 PHASE NON-HUMIDI-MIZER** **5 TON HORIZONTAL SUPPLY**

CFM	Available External Static Pressure (in. wg)									
	0.2		0.4		0.6		0.8		1.0	
	RPM	BHP	RPM	BHP	RPM	BHP	RPM	BHP	RPM	BHP
1500	**798**	**0.41**	906	0.55	1002	0.71	1088	0.87	1167	1.05
1625	**845**	**0.50**	949	0.65	1041	0.81	1125	0.98	1202	1.17
1750	**893**	**0.60**	993	0.76	1081	0.93	1163	1.11	1238	1.30
1875	**942**	**0.71**	1037	0.88	1123	1.06	1202	1.25	1275	1.44
2000	**992**	**0.84**	1083	1.02	1166	1.21	1242	1.40	1313	1.61
2125	1043	0.98	1129	1.17	1209	1.37	1283	1.57	1353	1.79
2250	1093	1.14	1177	1.34	1254	1.55	1325	1.76	1393	1.98
2375	1145	1.32	1225	1.53	1299	1.74	1369	1.97	1434	2.20
2500	1196	1.51	1273	1.73	1345	1.96	1413	2.19	1477	2.43

CFM	Available External Static Pressure (in. wg)									
	1.2		1.4		1.6		1.8		2.0	
	RPM	BHP	RPM	BHP	RPM	BHP	RPM	BHP	RPM	BHP
1500	1241	1.23	1310	1.42	1375	1.63	1438	1.84	1497	2.06
1625	1274	1.36	1342	1.56	1406	1.77	1467	1.98	1526	2.21
1750	1308	1.50	1375	1.70	1438	1.92	1498	2.14	1555	2.37
1875	1344	1.65	1409	1.86	1471	2.09	1530	2.32	1586	2.55
2000	1380	1.82	1444	2.04	1505	2.27	1563	2.51	1619	2.75
2125	1418	2.01	1481	2.24	1540	2.47	1597	2.72	**1652**	**2.97**
2250	1457	2.21	1518	2.45	1576	2.69	**1632**	**2.94**	**1686**	**3.20**
2375	1497	2.43	1556	2.68	**1614**	**2.93**	**1669**	**3.19**	–	–
2500	1538	2.68	**1596**	**2.93**	**1652**	**3.19**	–	–	–	–

NOTE: For more information, see General Fan Performance Notes.
Boldface indicates field–supplied drive is required.
Medium static 1035–1466 RPM, 2.4 BHP max
High static 1303–1687 RPM, 2.9 BHP max

Table 42 – 48HC06** **3 PHASE HUMIDI-MIZER** **5 TON HORIZONTAL SUPPLY**

CFM	Available External Static Pressure (in. wg)									
	0.2		0.4		0.6		0.8		1.0	
	RPM	BHP	RPM	BHP	RPM	BHP	RPM	BHP	RPM	BHP
1500	798	0.41	906	0.55	1002	0.71	1088	0.87	1167	1.05
1625	845	0.50	949	0.65	1041	0.81	1125	0.98	1202	1.17
1750	893	0.60	993	0.76	1081	0.93	1163	1.11	1238	1.30
1875	942	0.71	1037	0.88	1123	1.06	1202	1.25	1275	1.44
2000	992	0.84	1083	1.02	1166	1.21	1242	1.40	1313	1.61
2125	1043	0.98	1129	1.17	1209	1.37	1283	1.57	1353	1.79
2250	1093	1.14	1177	1.34	1254	1.55	1325	1.76	1393	1.98
2375	1145	1.32	1225	1.53	1299	1.74	1369	1.97	1434	2.20
2500	1196	1.51	1273	1.73	1345	1.96	1413	2.19	1477	2.43

CFM	Available External Static Pressure (in. wg)									
	1.2		1.4		1.6		1.8		2.0	
	RPM	BHP	RPM	BHP	RPM	BHP	RPM	BHP	RPM	BHP
1500	1241	1.23	1310	1.42	1375	1.63	1438	1.84	1497	2.06
1625	1274	1.36	1342	1.56	1406	1.77	1467	1.98	1526	2.21
1750	1308	1.50	1375	1.70	1438	1.92	1498	2.14	1555	2.37
1875	1344	1.65	1409	1.86	1471	2.09	1530	2.32	1586	2.55
2000	1380	1.82	1444	2.04	1505	2.27	1563	2.51	1619	2.75
2125	1418	2.01	1481	2.24	1540	2.47	1597	2.72	1652	2.97
2250	1457	2.21	1518	2.45	1576	2.69	1632	2.94	**1686**	**3.20**
2375	1497	2.43	1556	2.68	1614	2.93	**1669**	**3.19**	–	–
2500	1538	2.68	1596	2.93	**1652**	**3.19**	–	–	–	–

NOTE: For more information, see General Fan Performance Notes.
Boldface indicates field–supplied drive is required.
Standard static 770–1175 RPM, 1.7 BHP max
Medium static 1035–1466 RPM, 2.4 BHP max
High static 1303–1687 RPM, 2.9 BHP max

FAN PERFORMANCE (BELT DRIVE) cont.

Table 43 – 48HC07** | **3 PHASE** | **6 TON VERTICAL SUPPLY**

CFM	Available External Static Pressure (in. wg)									
	0.2		0.4		0.6		0.8		1.0	
	RPM	BHP	RPM	BHP	RPM	BHP	RPM	BHP	RPM	BHP
1800	**449**	**0.34**	539	0.53	615	0.75	681	0.99	742	1.26
1950	**470**	**0.40**	557	0.60	631	0.83	696	1.08	756	1.35
2100	491	0.47	576	0.68	648	0.91	712	1.17	771	1.45
2250	513	0.54	595	0.76	665	1.01	728	1.27	786	1.56
2400	536	0.63	615	0.86	684	1.11	745	1.39	802	1.68
2550	558	0.72	635	0.97	702	1.23	763	1.51	818	1.81
2700	582	0.83	656	1.08	721	1.35	781	1.65	835	1.95
2850	605	0.94	677	1.21	741	1.49	799	1.79	853	2.11
3000	629	1.07	699	1.35	761	1.64	818	1.95	871	2.28

CFM	Available External Static Pressure (in. wg)									
	1.2		1.4		1.6		1.8		2.0	
	RPM	BHP	RPM	BHP	RPM	BHP	RPM	BHP	RPM	BHP
1800	797	1.54	848	1.84	896	2.16	942	2.49	985	2.84
1950	810	1.64	861	1.94	909	2.26	954	2.60	997	2.96
2100	824	1.74	875	2.06	922	2.38	967	2.73	1009	3.09
2250	839	1.86	889	2.18	935	2.52	980	2.87	1022	3.23
2400	854	1.99	903	2.32	950	2.66	993	3.02	1035	3.39
2550	870	2.13	918	2.46	964	2.81	1008	3.18	1049	3.55
2700	886	2.28	934	2.62	979	2.98	1022	3.35	1063	3.74
2850	903	2.44	950	2.79	995	3.16	1037	3.54	1078	3.93
3000	920	2.62	966	2.98	1010	3.35	1052	3.74	1093	4.14

NOTE: For more information, see General Fan Performance Notes.
Boldface indicates field–supplied drive is required.

Standard static 489 – 747 RPM, 1.7 BHP max
Medium static 733 – 949 RPM, 2.9 BHP max
High static 909 – 1102 RPM, 4.7 BHP max

Table 44 – 48HC07** | **3 PHASE** | **6 TON HORIZONTAL SUPPLY**

CFM	Available External Static Pressure (in. wg)									
	0.2		0.4		0.6		0.8		1.0	
	RPM	BHP	RPM	BHP	RPM	BHP	RPM	BHP	RPM	BHP
1800	**441**	**0.33**	533	0.51	611	0.72	681	0.96	745	1.23
1950	**462**	**0.38**	550	0.58	626	0.80	694	1.04	757	1.31
2100	**483**	**0.45**	567	0.65	641	0.88	708	1.13	769	1.40
2250	505	0.52	586	0.73	657	0.97	722	1.22	782	1.50
2400	528	0.60	605	0.82	674	1.07	738	1.33	796	1.62
2550	550	0.69	625	0.92	692	1.17	754	1.45	811	1.74
2700	574	0.80	645	1.03	710	1.29	770	1.57	826	1.88
2850	597	0.91	666	1.16	729	1.43	788	1.71	843	2.02
3000	621	1.03	688	1.29	749	1.57	806	1.87	859	2.18

CFM	Available External Static Pressure (in. wg)									
	1.2		1.4		1.6		1.8		2.0	
	RPM	BHP	RPM	BHP	RPM	BHP	RPM	BHP	RPM	BHP
1800	804	1.51	860	1.82	912	2.15	961	2.49	1008	2.85
1950	815	1.60	869	1.91	920	2.24	969	2.59	1016	2.96
2100	826	1.70	880	2.01	930	2.35	978	2.70	1024	3.07
2250	838	1.81	891	2.12	941	2.46	988	2.82	1033	3.19
2400	851	1.92	903	2.25	952	2.59	999	2.95	1043	3.33
2550	865	2.05	916	2.38	964	2.73	1010	3.10	1054	3.48
2700	879	2.19	929	2.53	976	2.88	1022	3.25	1066	3.64
2850	894	2.35	943	2.69	990	3.05	1035	3.43	1078	3.82
3000	910	2.51	958	2.86	1004	3.23	1048	3.61	1090	4.01

NOTE: For more information, see General Fan Performance Notes.
Boldface indicates field–supplied drive is required.

Standard static 489 – 747 RPM, 1.7 BHP max
Medium static 733 – 949 RPM, 2.9 BHP max
High static 909 – 1102 RPM, 4.7 BHP max

FAN PERFORMANCE (BELT DRIVE) cont.

Table 45 – 48HC08** 3 PHASE 7.5 TON VERTICAL SUPPLY

CFM	Available External Static Pressure (in. wg)									
	0.2		0.4		0.6		0.8		1.0	
	RPM	BHP	RPM	BHP	RPM	BHP	RPM	BHP	RPM	BHP
2250	505	0.39	595	0.54	676	0.69	750	0.86	819	1.03
2438	532	0.47	617	0.63	694	0.79	766	0.97	833	1.15
2625	559	0.56	640	0.73	714	0.90	783	1.08	848	1.28
2813	588	0.67	664	0.84	735	1.03	801	1.22	864	1.42
3000	616	0.79	689	0.97	757	1.16	821	1.36	882	1.57
3188	646	0.92	715	1.11	780	1.31	842	1.52	901	1.74
3375	675	1.06	742	1.27	804	1.48	864	1.70	920	1.93
3563	705	1.23	769	1.44	829	1.66	886	1.89	941	2.13
3750	736	1.41	797	1.63	855	1.86	910	2.10	963	2.35

CFM	Available External Static Pressure (in. wg)									
	1.2		1.4		1.6		1.8		2.0	
	RPM	BHP	RPM	BHP	RPM	BHP	RPM	BHP	RPM	BHP
2250	884	1.21	945	1.40	1003	1.60	1059	1.80	1112	2.01
2438	896	1.34	955	1.54	1012	1.74	1066	1.95	1118	2.17
2625	909	1.47	967	1.68	1022	1.89	1075	2.11	1126	2.34
2813	923	1.62	980	1.84	1034	2.06	1086	2.29	1136	2.52
3000	939	1.79	994	2.01	1047	2.24	1098	2.47	1147	2.71
3188	956	1.97	1010	2.20	1061	2.43	1111	2.68	1159	2.93
3375	975	2.16	1027	2.40	1077	2.65	1125	2.90	1172	3.15
3563	994	2.37	1044	2.62	1093	2.87	1141	3.13	1186	3.40
3750	1014	2.60	1063	2.86	1111	3.12	1157	3.39	1202	3.66

NOTE: For more information, see General Fan Performance Notes.

Standard static 518 – 733 RPM, 1.7 BHP max
Medium static 690 – 936 RPM, 2.4 BHP max
High static 838 – 1084 RPM, 3.7 BHP max

Table 46 – 48HC08** 3 PHASE 7.5 TON HORIZONTAL SUPPLY

CFM	Available External Static Pressure (in. wg)									
	0.2		0.4		0.6		0.8		1.0	
	RPM	BHP	RPM	BHP	RPM	BHP	RPM	BHP	RPM	BHP
2250	482	0.36	577	0.51	659	0.66	732	0.82	799	0.98
2438	505	0.43	597	0.59	676	0.75	748	0.92	813	1.09
2625	529	0.51	617	0.68	694	0.85	764	1.03	827	1.22
2813	554	0.60	638	0.78	713	0.97	781	1.16	843	1.35
3000	579	0.70	660	0.89	732	1.09	799	1.29	860	1.50
3188	604	0.81	683	1.02	753	1.23	817	1.44	877	1.65
3375	630	0.94	706	1.15	774	1.37	836	1.60	895	1.82
3563	657	1.08	729	1.31	795	1.54	856	1.77	913	2.01
3750	683	1.23	753	1.47	817	1.71	877	1.96	933	2.21

CFM	Available External Static Pressure (in. wg)									
	1.2		1.4		1.6		1.8		2.0	
	RPM	BHP	RPM	BHP	RPM	BHP	RPM	BHP	RPM	BHP
2250	860	1.14	917	1.31	971	1.48	1022	1.66	1071	1.84
2438	873	1.27	929	1.45	983	1.63	1033	1.81	1081	2.00
2625	887	1.40	942	1.59	995	1.78	1045	1.98	1092	2.18
2813	901	1.55	956	1.75	1008	1.95	1057	2.15	1104	2.36
3000	917	1.70	970	1.91	1021	2.13	1070	2.34	1117	2.56
3188	933	1.87	986	2.09	1036	2.32	1084	2.54	1130	2.77
3375	950	2.05	1002	2.29	1051	2.52	1098	2.76	1144	3.00
3563	967	2.25	1018	2.49	1067	2.74	1113	2.99	1158	3.24
3750	985	2.46	1035	2.71	1083	2.97	1129	3.23	1173	3.49

NOTE: For more information, see General Fan Performance Notes.

Standard static 518 – 733 RPM, 1.7 BHP max
Medium static 690 – 936 RPM, 2.4 BHP max
High static 838 – 1084 RPM, 3.7 BHP max

FAN PERFORMANCE (BELT DRIVE) cont.

Table 47 – 48HC09** 3 PHASE 8.5 TON VERTICAL SUPPLY

CFM	Available External Static Pressure (in. wg)									
	0.2		0.4		0.6		0.8		1.0	
	RPM	BHP	RPM	BHP	RPM	BHP	RPM	BHP	RPM	BHP
2250	505	0.39	595	0.54	676	0.69	750	0.86	819	1.03
2438	532	0.47	617	0.63	694	0.79	766	0.97	833	1.15
2625	559	0.56	640	0.73	714	0.90	783	1.08	848	1.28
2813	588	0.67	664	0.84	735	1.03	801	1.22	864	1.42
3000	616	0.79	689	0.97	757	1.16	821	1.36	882	1.57
3188	646	0.92	715	1.11	780	1.31	842	1.52	901	1.74
3375	675	1.06	742	1.27	804	1.48	864	1.70	920	1.93
3563	705	1.23	769	1.44	829	1.66	886	1.89	941	2.13
3750	736	1.41	797	1.63	855	1.86	910	2.10	963	2.35

CFM	Available External Static Pressure (in. wg)									
	1.2		1.4		1.6		1.8		2.0	
	RPM	BHP	RPM	BHP	RPM	BHP	RPM	BHP	RPM	BHP
2250	884	1.21	945	1.40	1003	1.60	1059	1.80	1112	2.01
2438	896	1.34	955	1.54	1012	1.74	1066	1.95	1118	2.17
2625	909	1.47	967	1.68	1022	1.89	1075	2.11	1126	2.34
2813	923	1.62	980	1.84	1034	2.06	1086	2.29	1136	2.52
3000	939	1.79	994	2.01	1047	2.24	1098	2.47	1147	2.71
3188	956	1.97	1010	2.20	1061	2.43	1111	2.68	1159	2.93
3375	975	2.16	1027	2.40	1077	2.65	1125	2.90	1172	3.15
3563	994	2.37	1044	2.62	1093	2.87	1141	3.13	1186	3.40
3750	1014	2.60	1063	2.86	1111	3.12	1157	3.39	1202	3.66

NOTE: For more information, see General Fan Performance Notes.

Standard static 518 – 733 RPM, 1.7 BHP max
Medium static 690 – 936 RPM, 2.4 BHP max
High static 838 – 1084 RPM, 3.7 BHP max

Table 48 – 48HC09** 3 PHASE 8.5 TON HORIZONTAL SUPPLY

CFM	Available External Static Pressure (in. wg)									
	0.2		0.4		0.6		0.8		1.0	
	RPM	BHP	RPM	BHP	RPM	BHP	RPM	BHP	RPM	BHP
2250	520	0.47	609	0.64	687	0.81	757	0.99	821	1.16
2438	547	0.57	633	0.75	708	0.94	776	1.12	839	1.31
2625	575	0.68	657	0.88	730	1.07	796	1.27	857	1.48
2813	604	0.81	683	1.02	753	1.23	817	1.44	877	1.65
3000	634	0.95	709	1.17	777	1.40	839	1.62	897	1.85
3188	664	1.11	736	1.35	801	1.58	862	1.82	919	2.06
3375	694	1.29	763	1.54	826	1.79	885	2.04	941	2.29
3563	725	1.49	791	1.75	852	2.01	909	2.28	963	2.54
3750	756	1.71	819	1.98	879	2.26	934	2.53	987	2.81

CFM	Available External Static Pressure (in. wg)									
	1.2		1.4		1.6		1.8		2.0	
	RPM	BHP	RPM	BHP	RPM	BHP	RPM	BHP	RPM	BHP
2250	881	1.35	937	1.53	990	1.72	1040	1.91	1088	2.11
2438	897	1.51	952	1.70	1004	1.90	1054	2.11	1101	2.31
2625	915	1.68	968	1.89	1020	2.10	1068	2.32	1115	2.53
2813	933	1.87	986	2.09	1036	2.32	1084	2.54	1130	2.77
3000	952	2.08	1004	2.31	1053	2.55	1100	2.79	1145	3.03
3188	972	2.30	1023	2.55	1071	2.80	1118	3.05	1162	3.30
3375	993	2.55	1043	2.81	1090	3.07	1136	3.33	1179	3.59
3563	1014	2.81	1063	3.08	1110	3.36	1154	3.63	1198	3.91
3750	1037	3.09	1084	3.38	1130	3.66	1174	3.95	1216	4.24

NOTE: For more information, see General Fan Performance Notes.

Standard static 518 – 733 RPM, 1.7 BHP max
Medium static 690 – 936 RPM, 2.4 BHP max
High static 838 – 1084 RPM, 3.7 BHP max

FAN PERFORMANCE (BELT DRIVE) cont.

Table 49 – 48HC11** **3 PHASE** **10 TON VERTICAL SUPPLY**

CFM	Available External Static Pressure (in. wg)									
	0.2		0.4		0.6		0.8		1.0	
	RPM	BHP	RPM	BHP	RPM	BHP	RPM	BHP	RPM	BHP
3000	616	0.79	689	0.97	757	1.16	821	1.36	882	1.57
3250	655	0.96	724	1.16	788	1.37	849	1.58	907	1.80
3500	695	1.17	760	1.38	821	1.60	879	1.83	934	2.06
3750	736	1.41	797	1.63	855	1.86	910	2.10	963	2.35
4000	777	1.68	834	1.91	889	2.16	942	2.41	993	2.67
4250	818	1.98	873	2.23	925	2.49	976	2.75	1025	3.02
4500	860	2.32	912	2.58	962	2.85	1010	3.13	1057	3.41
4750	902	2.69	951	2.97	999	3.26	1046	3.55	1091	3.84
5000	944	3.11	991	3.40	1037	3.70	1082	4.00	1125	4.31

CFM	Available External Static Pressure (in. wg)									
	1.2		1.4		1.6		1.8		2.0	
	RPM	BHP	RPM	BHP	RPM	BHP	RPM	BHP	RPM	BHP
3000	939	1.79	994	2.01	1047	2.24	1098	2.47	1147	2.71
3250	962	2.03	1015	2.26	1066	2.50	1115	2.75	1163	3.00
3500	987	2.30	1038	2.54	1088	2.80	1135	3.05	1181	3.32
3750	1014	2.60	1063	2.86	1111	3.12	1157	3.39	1202	3.66
4000	1042	2.93	1090	3.20	1136	3.48	1180	3.76	1224	4.04
4250	1072	3.30	1118	3.58	1162	3.87	1205	4.16	1247	4.46
4500	1103	3.70	1147	4.00	1190	4.29	1232	4.60	–	–
4750	1135	4.14	1177	4.45	–	–	–	–	–	–
5000	1167	4.63	–	–	–	–	–	–	–	–

NOTE: For more information, see General Fan Performance Notes.

Standard static 591 – 838 RPM, 2.4 BHP max
Medium static 838 – 1084 RPM, 3.7 BHP max
High static 1022 – 1240 RPM, 4.9 BHP max

Table 50 – 48HC11** **3 PHASE** **10 TON HORIZONTAL SUPPLY**

CFM	Available External Static Pressure (in. wg)									
	0.2		0.4		0.6		0.8		1.0	
	RPM	BHP	RPM	BHP	RPM	BHP	RPM	BHP	RPM	BHP
3000	579	0.70	660	0.89	732	1.09	799	1.29	860	1.50
3250	613	0.85	690	1.06	760	1.27	823	1.49	883	1.71
3500	648	1.03	721	1.25	788	1.48	850	1.71	907	1.95
3750	683	1.23	753	1.47	817	1.71	877	1.96	933	2.21
4000	719	1.45	786	1.71	848	1.97	905	2.23	959	2.50
4250	756	1.71	819	1.98	879	2.26	934	2.53	987	2.81
4500	792	1.99	853	2.28	910	2.57	964	2.87	1015	3.16
4750	830	2.31	888	2.62	943	2.92	995	3.23	1044	3.54
5000	867	2.66	923	2.98	976	3.30	1026	3.63	1074	3.95

CFM	Available External Static Pressure (in. wg)									
	1.2		1.4		1.6		1.8		2.0	
	RPM	BHP	RPM	BHP	RPM	BHP	RPM	BHP	RPM	BHP
3000	917	1.70	970	1.91	1021	2.13	1070	2.34	1117	2.56
3250	938	1.93	991	2.16	1041	2.38	1089	2.61	1134	2.85
3500	961	2.18	1013	2.42	1062	2.66	1108	2.91	1153	3.15
3750	985	2.46	1035	2.71	1083	2.97	1129	3.23	1173	3.49
4000	1011	2.76	1059	3.03	1106	3.30	1151	3.58	1194	3.85
4250	1037	3.09	1084	3.38	1130	3.66	1174	3.95	1216	4.24
4500	1064	3.46	1110	3.76	1155	4.06	1198	4.36	1239	4.66
4750	1091	3.85	1137	4.16	1180	4.48	–	–	–	–
5000	1120	4.28	1164	4.61	–	–	–	–	–	–

NOTE: For more information, see General Fan Performance Notes.

Standard static 591 – 838 RPM, 2.4 BHP max
Medium static 838 – 1084 RPM, 3.7 BHP max
High static 1022 – 1240 RPM, 4.9 BHP max

FAN PERFORMANCE (BELT DRIVE) cont.

Table 51 – 48HC12** **3 PHASE** **10 TON VERTICAL SUPPLY**

CFM	Available External Static Pressure (in. wg)									
	0.2		0.4		0.6		0.8		1.0	
	RPM	BHP	RPM	BHP	RPM	BHP	RPM	BHP	RPM	BHP
3000	616	0.79	689	0.97	757	1.16	821	1.36	882	1.57
3250	655	0.96	724	1.16	788	1.37	849	1.58	907	1.80
3500	695	1.17	760	1.38	821	1.60	879	1.83	934	2.06
3750	736	1.41	797	1.63	855	1.86	910	2.10	963	2.35
4000	777	1.68	834	1.91	889	2.16	942	2.41	993	2.67
4250	818	1.98	873	2.23	925	2.49	976	2.75	1025	3.02
4500	860	2.32	912	2.58	962	2.85	1010	3.13	1057	3.41
4750	902	2.69	951	2.97	999	3.26	1046	3.55	1091	3.84
5000	944	3.11	991	3.40	1037	3.70	1082	4.00	1125	4.31

CFM	Available External Static Pressure (in. wg)									
	1.2		1.4		1.6		1.8		2.0	
	RPM	BHP	RPM	BHP	RPM	BHP	RPM	BHP	RPM	BHP
3000	939	1.79	994	2.01	1047	2.24	1098	2.47	1147	2.71
3250	962	2.03	1015	2.26	1066	2.50	1115	2.75	1163	3.00
3500	987	2.30	1038	2.54	1088	2.80	1135	3.05	1181	3.32
3750	1014	2.60	1063	2.86	1111	3.12	1157	3.39	1202	3.66
4000	1042	2.93	1090	3.20	1136	3.48	1180	3.76	1224	4.04
4250	1072	3.30	1118	3.58	1162	3.87	1205	4.16	1247	4.46
4500	1103	3.70	1147	4.00	1190	4.29	1232	4.60	–	–
4750	1135	4.14	1177	4.45	–	–	–	–	–	–
5000	1167	4.63	–	–	–	–	–	–	–	–

NOTE: For more information, see General Fan Performance Notes.

Standard static 591 – 838 RPM, 2.4 BHP max
Medium static 838 – 1084 RPM, 3.7 BHP max
High static 1022 – 1240 RPM, 4.9 BHP max

Table 52 – 48HC12** **3 PHASE** **10 TON HORIZONTAL SUPPLY**

CFM	Available External Static Pressure (in. wg)									
	0.2		0.4		0.6		0.8		1.0	
	RPM	BHP	RPM	BHP	RPM	BHP	RPM	BHP	RPM	BHP
3000	579	0.70	660	0.89	732	1.09	799	1.29	860	1.50
3250	613	0.85	690	1.06	760	1.27	823	1.49	883	1.71
3500	648	1.03	721	1.25	788	1.48	850	1.71	907	1.95
3750	683	1.23	753	1.47	817	1.71	877	1.96	933	2.21
4000	719	1.45	786	1.71	848	1.97	905	2.23	959	2.50
4250	756	1.71	819	1.98	879	2.26	934	2.53	987	2.81
4500	792	1.99	853	2.28	910	2.57	964	2.87	1015	3.16
4750	830	2.31	888	2.62	943	2.92	995	3.23	1044	3.54
5000	867	2.66	923	2.98	976	3.30	1026	3.63	1074	3.95

CFM	Available External Static Pressure (in. wg)									
	1.2		1.4		1.6		1.8		2.0	
	RPM	BHP	RPM	BHP	RPM	BHP	RPM	BHP	RPM	BHP
3000	917	1.70	970	1.91	1021	2.13	1070	2.34	1117	2.56
3250	938	1.93	991	2.16	1041	2.38	1089	2.61	1134	2.85
3500	961	2.18	1013	2.42	1062	2.66	1108	2.91	1153	3.15
3750	985	2.46	1035	2.71	1083	2.97	1129	3.23	1173	3.49
4000	1011	2.76	1059	3.03	1106	3.30	1151	3.58	1194	3.85
4250	1037	3.09	1084	3.38	1130	3.66	1174	3.95	1216	4.24
4500	1064	3.46	1110	3.76	1155	4.06	1198	4.36	1239	4.66
4750	1091	3.85	1137	4.16	1180	4.48	–	–	–	–
5000	1120	4.28	1164	4.61	–	–	–	–	–	–

NOTE: For more information, see General Fan Performance Notes.

Standard static 591 – 838 RPM, 2.4 BHP max
Medium static 838 – 1084 RPM, 3.7 BHP max
High static 1022 – 1240 RPM, 4.9 BHP max

FAN PERFORMANCE (BELT DRIVE) cont.

Table 53 – 48HC14** 3 PHASE 12.5 TON VERTICAL SUPPLY

CFM	Available External Static Pressure (in. wg)									
	0.2		0.4		0.6		0.8		1.0	
	RPM	BHP	RPM	BHP	RPM	BHP	RPM	BHP	RPM	BHP
3438	431	0.59	504	0.81	574	1.08	643	1.40	706	1.74
3750	456	0.71	524	0.95	589	1.22	653	1.54	715	1.90
4063	481	0.86	546	1.11	606	1.39	666	1.71	725	2.07
4375	507	1.03	569	1.30	626	1.59	681	1.91	736	2.27
4688	533	1.22	593	1.51	647	1.81	698	2.13	750	2.49
5000	560	1.44	617	1.74	669	2.05	718	2.39	766	2.75
5313	587	1.68	642	2.00	691	2.33	738	2.67	784	3.04
5625	614	1.95	667	2.29	715	2.63	760	2.99	804	3.36
5938	642	2.25	692	2.60	739	2.97	782	3.34	824	3.72
6250	670	2.58	718	2.95	763	3.33	805	3.72	846	4.11

CFM	Available External Static Pressure (in. wg)									
	1.2		1.4		1.6		1.8		2.0	
	RPM	BHP	RPM	BHP	RPM	BHP	RPM	BHP	RPM	BHP
3438	763	2.10	815	2.46	862	2.82	905	3.18	946	3.55
3750	772	2.28	825	2.66	873	3.05	918	3.45	959	3.84
4063	781	2.46	834	2.87	883	3.29	929	3.71	971	4.14
4375	790	2.66	843	3.09	892	3.53	938	3.98	982	4.43
4688	801	2.89	852	3.32	901	3.78	947	4.25	991	4.73
5000	814	3.15	863	3.58	910	4.04	956	4.53	999	5.03
5313	830	3.44	875	3.87	920	4.33	965	4.83	1008	5.34
5625	847	3.77	890	4.20	933	4.66	975	5.15	1017	5.67
5938	865	4.13	906	4.56	947	5.03	987	5.52	1028	6.04
6250	885	4.53	924	4.97	962	5.43	1001	5.92	–	–

NOTE: For more information, see General Fan Performance Notes.

Standard static 440 – 609 RPM, 2.9 BHP max

Medium static 609 – 778 RPM, 3.7 BHP max

High static 776 – 955 RPM, 6.1 BHP max

Table 54 – 48HC14** 3 PHASE 12.5 TON HORIZONTAL SUPPLY

CFM	Available External Static Pressure (in. wg)									
	0.2		0.4		0.6		0.8		1.0	
	RPM	BHP	RPM	BHP	RPM	BHP	RPM	BHP	RPM	BHP
3438	421	0.57	493	0.78	561	1.02	627	1.30	688	1.62
3750	445	0.69	512	0.91	576	1.17	638	1.45	697	1.77
4063	470	0.84	533	1.07	593	1.33	651	1.62	707	1.94
4375	496	1.00	555	1.25	612	1.52	666	1.82	720	2.14
4688	522	1.19	579	1.46	632	1.74	683	2.04	734	2.37
5000	549	1.41	602	1.68	653	1.98	702	2.29	750	2.62
5313	576	1.64	627	1.94	675	2.24	721	2.57	767	2.91
5625	603	1.91	652	2.22	698	2.54	742	2.87	786	3.23
5938	630	2.20	677	2.53	721	2.87	764	3.21	805	3.57
6250	657	2.53	702	2.87	745	3.22	786	3.58	826	3.96

CFM	Available External Static Pressure (in. wg)									
	1.2		1.4		1.6		1.8		2.0	
	RPM	BHP	RPM	BHP	RPM	BHP	RPM	BHP	RPM	BHP
3438	746	1.96	799	2.32	849	2.70	896	3.09	940	3.50
3750	753	2.12	806	2.48	856	2.88	903	3.28	947	3.70
4063	761	2.29	813	2.67	862	3.07	909	3.48	953	3.92
4375	771	2.50	821	2.88	869	3.28	916	3.70	960	4.15
4688	783	2.73	831	3.11	878	3.52	923	3.95	966	4.40
5000	797	2.99	843	3.37	888	3.78	931	4.22	974	4.67
5313	812	3.28	856	3.67	899	4.08	941	4.52	983	4.98
5625	828	3.60	870	3.99	912	4.41	953	4.85	993	5.31
5938	846	3.95	886	4.36	926	4.78	965	5.22	1004	5.69
6250	865	4.35	904	4.75	942	5.18	979	5.63	–	–

NOTE: For more information, see General Fan Performance Notes.

Standard static 440 – 609 RPM, 2.9 BHP max

Medium static 609 – 778 RPM, 3.7 BHP max

High static 776 – 955 RPM, 6.1 BHP max

FAN PERFORMANCE (cont.)

X13 MULTI-SPEED/TORQUE MOTOR

Table 55 – 48HC*A04 Vertical Unit-Direct Drive

Speed (Torque) Tap	CFM	ESP	BHP
1	900	0.30	0.19
	975	0.17	0.17
	1050	0.06	0.16
	1125	–	–
	1200	–	–
	1275	–	–
	1350	–	–
	1425	–	–
	1500	–	–
2	900	0.48	0.25
	975	0.34	0.23
	1050	0.20	0.22
	1125	0.07	0.20
	1200	–	–
	1275	–	–
	1350	–	–
	1425	–	–
	1500	–	–
3	900	0.84	0.38
	975	0.69	0.36
	1050	0.53	0.33
	1125	0.38	0.32
	1200	0.24	0.31
	1275	0.10	0.31
	1350	–	–
	1425	–	–
	1500	–	–
4	900	0.99	0.43
	975	0.88	0.43
	1050	0.75	0.43
	1125	0.61	0.43
	1200	0.47	0.42
	1275	0.33	0.40
	1350	0.19	0.38
	1425	–	–
	1500	–	–
5	900	1.10	0.47
	975	1.02	0.49
	1050	0.75	0.51
	1125	0.61	0.54
	1200	0.81	0.56
	1275	0.74	0.58
	1350	0.67	0.61
	1425	0.60	0.63
	1500	0.52	0.66

Table 56 – 48HC*A04 Horizontal Unit-Direct Drive

Speed (Torque) Tap	CFM	ESP	BHP
1	900	0.45	0.23
	975	0.33	0.22
	1050	0.22	0.20
	1125	0.12	0.19
	1200	0.05	0.17
	1275	–	–
	1350	–	–
	1425	–	–
	1500	–	–
2	900	0.66	0.30
	975	0.52	0.28
	1050	0.39	0.27
	1125	0.27	0.26
	1200	0.16	0.24
	1275	0.05	0.23
	1350	–	–
	1425	–	–
	1500	–	–
3	900	1.01	0.43
	975	0.88	0.41
	1050	0.73	0.39
	1125	0.59	0.38
	1200	0.46	0.36
	1275	0.33	0.36
	1350	0.21	0.33
	1425	0.09	0.31
	1500	–	–
4	900	1.13	0.46
	975	1.03	0.46
	1050	0.92	0.46
	1125	0.81	0.46
	1200	0.69	0.46
	1275	0.57	0.45
	1350	0.44	0.44
	1425	0.31	0.42
	1500	0.18	0.40
5	900	1.20	0.49
	975	1.14	0.51
	1050	0.92	0.53
	1125	0.81	0.55
	1200	0.95	0.57
	1275	0.90	0.60
	1350	0.84	0.62
	1425	0.78	0.65
	1500	0.72	0.68

FAN PERFORMANCE (cont.)

X13 MULTI-SPEED/TORQUE MOTOR (cont.)

Table 57 – 48HC*A05 Vertical Unit-Direct Drive

Speed (Torque) Tap	CFM	ESP	BHP
1	1200	0.38	0.30
	1300	0.24	0.28
	1400	0.12	0.27
	1500	0.01	0.26
	1600	–	–
	1700	–	–
	1800	–	–
	1900	–	–
	2000	–	–
2	1200	0.49	0.34
	1300	0.34	0.32
	1400	0.20	0.31
	1500	0.05	0.29
	1600	–	–
	1700	–	–
	1800	–	–
	1900	–	–
	2000	–	–
3	1200	0.87	0.56
	1300	0.74	0.57
	1400	0.60	0.59
	1500	0.44	0.56
	1600	0.29	0.50
	1700	0.14	0.47
	1800	0.02	0.46
	1900	–	–
	2000	–	–
4	1200	0.93	0.57
	1300	0.83	0.60
	1400	0.72	0.63
	1500	0.60	0.63
	1600	0.48	0.62
	1700	0.35	0.62
	1800	0.21	0.61
	1900	0.06	0.58
	2000	–	–
5	1200	0.97	0.58
	1300	0.89	0.61
	1400	0.72	0.65
	1500	0.60	0.68
	1600	0.64	0.72
	1700	0.55	0.75
	1800	0.46	0.79
	1900	0.35	0.82
	2000	0.25	0.86

Table 58 – 48HC*A05 Horizontal Unit-Direct Drive

Speed (Torque) Tap	CFM	ESP	BHP
1	1200	0.49	0.35
	1300	0.34	0.33
	1400	0.20	0.31
	1500	0.06	0.29
	1600	–	–
	1700	–	–
	1800	–	–
	1900	–	–
	2000	–	–
2	1200	0.60	0.40
	1300	0.45	0.38
	1400	0.30	0.36
	1500	0.16	0.34
	1600	0.01	0.32
	1700	–	–
	1800	–	–
	1900	–	–
	2000	–	–
3	1200	0.94	0.59
	1300	0.83	0.61
	1400	0.71	0.63
	1500	0.59	0.61
	1600	0.46	0.59
	1700	0.33	0.56
	1800	0.19	0.53
	1900	0.07	0.49
	2000	–	–
4	1200	0.98	0.59
	1300	0.89	0.62
	1400	0.81	0.65
	1500	0.72	0.66
	1600	0.62	0.67
	1700	0.52	0.68
	1800	0.40	0.68
	1900	0.27	0.66
	2000	0.12	0.61
5	1200	1.02	0.60
	1300	0.95	0.63
	1400	0.81	0.67
	1500	0.72	0.70
	1600	0.74	0.74
	1700	0.67	0.78
	1800	0.59	0.82
	1900	0.51	0.86
	2000	0.42	0.89

FAN PERFORMANCE (cont.)

X13 MULTI-SPEED/TORQUE MOTOR (cont.)

Table 59 – 48HC*A06 Vertical Unit-Direct Drive

Speed (Torque) Tap	CFM	ESP	BHP
1	1500	0.27	0.45
	1625	0.08	0.43
	1750	–	–
	1875	–	–
	2000	–	–
	2125	–	–
	2250	–	–
	2375	–	–
	2500	–	–
2	1500	0.48	0.57
	1625	0.26	0.55
	1750	0.08	0.53
	1875	–	–
	2000	–	–
	2125	–	–
	2250	–	–
	2375	–	–
	2500	–	–
3	1500	0.91	0.82
	1625	0.72	0.82
	1750	0.52	0.81
	1875	0.31	0.78
	2000	0.11	0.77
	2125	–	–
	2250	–	–
	2375	–	–
	2500	–	–
4	1500	0.98	0.85
	1625	0.82	0.89
	1750	0.66	0.92
	1875	0.50	0.90
	2000	0.32	0.92
	2125	0.13	0.86
	2250	–	–
	2375	–	–
	2500	–	–
5	1500	1.00	–
	1625	0.86	0.91
	1750	0.66	0.95
	1875	0.50	0.98
	2000	0.41	1.01
	2125	0.25	0.88
	2250	0.06	1.01
	2375	–	–
	2500	–	–

Table 60 – 48HC*A06 Horizontal Unit-Direct Drive

Speed (Torque) Tap	CFM	ESP	BHP
1	1500	0.40	0.50
	1625	0.20	0.48
	1750	0.04	0.45
	1875	–	–
	2000	–	–
	2125	–	–
	2250	–	–
	2375	–	–
	2500	–	–
2	1500	0.62	0.62
	1625	0.39	0.60
	1750	0.19	0.57
	1875	0.03	0.53
	2000	–	–
	2125	–	–
	2250	–	–
	2375	–	–
	2500	–	–
3	1500	1.04	0.87
	1625	0.87	0.88
	1750	0.68	0.88
	1875	0.48	0.84
	2000	0.28	0.84
	2125	0.07	0.84
	2250	–	–
	2375	–	–
	2500	–	–
4	1500	1.10	0.90
	1625	0.96	0.94
	1750	0.81	0.98
	1875	0.65	0.95
	2000	0.47	1.00
	2125	0.27	0.94
	2250	0.05	0.96
	2375	–	–
	2500	–	–
5	1500	1.12	0.92
	1625	1.00	0.96
	1750	0.81	1.00
	1875	0.65	1.04
	2000	0.56	1.08
	2125	0.39	0.95
	2250	0.19	1.09
	2375	–	–
	2500	–	–

FAN PERFORMANCE (cont.)

Table 61 – PULLEY ADJUSTMENT

UNIT		Motor/Drive Combo	Motor Pulley turns open										
			0	0.5	1	1.5	2	2.5	3	3.5	4	4.5	5
04	1 Phase	Standard Static	854	825	795	766	736	707	678	648	619	589	560
		Medium Static	1175	1135	1094	1054	1013	973	932	892	851	811	770
	3 Phase	Standard Static*	854	825	795	766	736	707	678	648	619	589	560
		Medium Static*	1175	1135	1094	1054	1013	973	932	892	851	811	770
		High Static	1466	1423	1380	1337	1294	1251	1207	1164	1121	1078	1035
05	1 Phase	Standard Static	854	825	795	766	736	707	678	648	619	589	560
		Medium Static	1175	1135	1094	1054	1013	973	932	892	851	811	770
	3 Phase	Standard Static*	854	825	795	766	736	707	678	648	619	589	560
		Medium Static*	1175	1135	1094	1054	1013	973	932	892	851	811	770
		Medium Static	1303	1265	1226	1188	1150	1112	1073	1035	997	958	920
		High Static	1639	1596	1553	1510	1467	1424	1380	1337	1294	1251	1208
06	1 Phase	Standard Static	1175	1135	1094	1054	1013	973	932	892	851	811	770
		Medium Static	1466	1423	1380	1337	1294	1251	1207	1164	1121	1078	1035
	3 Phase	Standard Static*	1175	1135	1094	1054	1013	973	932	892	851	811	770
		Medium Static*	1466	1423	1380	1337	1294	1251	1207	1164	1121	1078	1035
		High Static	1687	1649	1610	1572	1533	1495	1457	1418	1380	1341	1303
07	3 Phase	Standard Static	747	721	695	670	644	618	592	566	541	515	489
		Medium Static	949	927	906	884	863	841	819	798	776	755	733
		High Static	1102	1083	1063	1044	1025	1006	986	967	948	928	909
08	3 Phase	Standard Static	733	712	690	669	647	626	604	583	561	540	518
		Medium Static	936	911	887	862	838	813	788	764	739	715	690
		High Static	1084	1059	1035	1010	986	961	936	912	887	863	838
09	3 Phase	Standard Static	733	712	690	669	647	626	604	583	561	540	518
		Medium Static	936	911	887	862	838	813	788	764	739	715	690
		High Static	1084	1059	1035	1010	986	961	936	912	887	863	838
11	3 Phase	Standard Static	838	813	789	764	739	715	690	665	640	616	591
		Medium Static	1084	1059	1035	1010	986	961	936	912	887	863	838
		High Static	1240	1218	1196	1175	1153	1131	1109	1087	1066	1044	1022
12	3 Phase	Standard Static	838	813	789	764	739	715	690	665	640	616	591
		Medium Static	1084	1059	1035	1010	986	961	936	912	887	863	838
		High Static	1240	1218	1196	1175	1153	1131	1109	1087	1066	1044	1022
14	3 Phase	Standard Static	609	592	575	558	541	525	508	491	474	457	440
		Medium Static	778	761	744	727	710	694	677	660	643	626	609
		High Static	955	973	951	929	907	886	864	842	820	798	776

– Factory settings

* Humidi–MiZer models only

ELECTRICAL INFORMATION

Table 62 – 48HC04** SINGLE STAGE COOLING WITH SINGLE SPEED INDOOR FAN MOTOR

V–Ph–Hz	VOLTAGE RANGE		COMP (ea)		OFM (ea)		IFM		
	MIN	MAX	RLA	LRA	WATTS	FLA	TYPE	EFF at Full Load	FLA
208–1–60	187	253	16.6	79	190	1.0	DD–STD	78%	7.4
					190	1.0	STD	67%	4.9
					190	1.0	MED	67%	4.9
230–1–60	187	253	16.6	79	190	1.0	DD–STD	78%	7.4
					190	1.0	STD	67%	4.9
					190	1.0	MED	67%	4.9
208–3–60	187	253	10.4	73	190	1.0	DD–STD	78%	7.4
					190	1.0	STD	75%	5.2
					190	1.0	MED	75%	5.2
					190	1.0	HIGH	87%	6.9
230–3–60	187	253	10.4	73	190	1.0	DD–STD	78%	7.4
					190	1.0	STD	75%	5.2
					190	1.0	MED	75%	5.2
					190	1.0	HIGH	87%	6.7
460–3–60	414	506	5.8	38	190	0.5	DD–STD	78%	4.0
					190	0.5	STD	75%	2.6
					190	0.5	MED	75%	2.6
					190	0.5	HIGH	87%	3.4
575–3–60	518	633	3.8	37	190	0.5	DD–STD	78%	4.0
					190	0.5	STD	73%	1.2
					190	0.5	MED	73%	1.2
					190	0.5	HIGH	78%	2.0

Table 63 – 48HC05** SINGLE STAGE COOLING WITH SINGLE SPEED INDOOR FAN MOTOR

V–Ph–Hz	VOLTAGE RANGE		COMP (ea)		OFM (ea)		IFM		
	MIN	MAX	RLA	LRA	WATTS	FLA	TYPE	EFF at Full Load	FLA
208–1–60	187	253	21.8	117	325	1.4	DD–STD	78%	7.4
					325	1.4	STD	67%	4.9
					325	1.4	MED	67%	4.9
230–1–60	187	253	21.8	117	325	1.4	DD–STD	78%	7.4
					325	1.4	STD	67%	4.9
					325	1.4	MED	67%	4.9
208–3–60	187	253	13.7	83	325	1.4	DD–STD	78%	7.4
					325	1.4	STD	75%	5.2
					325	1.4	MED	87%	5.2
					325	1.4	HIGH	89%	8.4
230–3–60	187	253	13.7	83	325	1.4	DD–STD	78%	7.4
					325	1.4	STD	75%	5.2
					325	1.4	MED	87%	4.9
					325	1.4	HIGH	89%	8.3
460–3–60	414	506	6.2	41	325	0.9	DD–STD	78%	4.0
					325	0.9	STD	75%	2.6
					325	0.9	MED	87%	2.5
					325	0.9	HIGH	89%	4.2
575–3–60	518	633	4.8	33	325	0.9	DD–STD	78%	4.0
					325	0.9	STD	73%	1.2
					325	0.9	MED	72%	1.6
					325	0.9	HIGH	77%	2.8

ELECTRICAL INFORMATION

Table 64 – 48HC06** SINGLE STAGE COOLING WITH SINGLE SPEED INDOOR FAN MOTOR

V–Ph–Hz	VOLTAGE RANGE		COMP (ea)		OFM (ea)		IFM		
	MIN	MAX	RLA	LRA	WATTS	FLA	TYPE	EFF at Full Load	FLA
208–1–60	187	253	25.0	134	325	1.4	DD–STD	78%	7.4
					325	1.4	STD	67%	4.9
					325	1.4	MED	76%	7.0
230–1–60	187	253	25.0	134	325	1.4	DD–STD	78%	7.4
					325	1.4	STD	67%	4.9
					325	1.4	MED	76%	7.0
208–3–60	187	253	15.9	110	325	1.4	DD–STD	78%	7.4
					325	1.4	STD	75%	5.2
					325	1.4	MED	87%	6.9
					325	1.4	HIGH	89%	8.4
230–3–60	187	253	15.9	110	325	1.4	DD–STD	78%	7.4
					325	1.4	STD	75%	5.2
					325	1.4	MED	87%	6.7
					325	1.4	HIGH	89%	8.3
460–3–60	414	506	7.0	52	325	0.9	DD–STD	78%	4.0
					325	0.9	STD	75%	2.6
					325	0.9	MED	87%	3.4
					325	0.9	HIGH	89%	4.2
575–3–60	518	633	5.1	40	325	0.9	DD–STD	78%	4.0
					325	0.9	STD	73%	1.2
					325	0.9	MED	78%	2.0
					325	0.9	HIGH	77%	2.8

Table 65 – 48HC07** SINGLE STAGE COOLING WITH SINGLE SPEED INDOOR FAN MOTOR

V–Ph–Hz	VOLTAGE RANGE		COMP (ea)		OFM (ea)		IFM		
	MIN	MAX	RLA	LRA	WATTS	FLA	TYPE	EFF at Full Load	FLA
208–3–60	187	253	19.0	123	325	1.5	STD	87%	5.2
					325	1.5	MED	89%	8.4
					325	1.5	HIGH	83%	13.6
230–3–60	187	253	19.0	123	325	1.5	STD	87%	4.9
					325	1.5	MED	89%	8.3
					325	1.5	HIGH	83%	12.7
460–3–60	414	506	9.7	62	325	0.8	STD	87%	2.5
					325	0.8	MED	89%	4.2
					325	0.8	HIGH	83%	6.4
575–3–60	518	633	7.4	50	325	0.6	STD	72%	1.6
					325	0.6	MED	77%	2.8
					325	0.6	HIGH	81%	5.6

Table 66 – 48HC08** — **2-STAGE COOLING WITH SINGLE SPEED INDOOR FAN MOTOR**

V–Ph–Hz	VOLTAGE RANGE		COMP (Cir 1)		COMP (Cir 2)		OFM (ea)		IFM		
	MIN	MAX	RLA	LRA	RLA	LRA	WATTS	FLA	TYPE	EFF at Full Load	FLA
208–3–60	187	253	13.6	83	13.6	83	325	1.5	STD	87%	5.2
							325	1.5	MED	87%	6.9
							325	1.5	HIGH	87%	10.6
230–3–60	187	253	13.6	83	13.6	83	325	1.5	STD	87%	4.9
							325	1.5	MED	87%	6.7
							325	1.5	HIGH	87%	10.6
460–3–60	414	506	6.1	41	6.1	41	325	0.8	STD	87%	2.5
							325	0.8	MED	87%	3.4
							325	0.8	HIGH	87%	5.3
575–3–60	518	633	4.2	33	4.2	33	325	0.6	STD	72%	1.6
							325	0.6	MED	78%	2
							325	0.6	HIGH	77%	2.8

Table 67 – 48HC09** — **2-STAGE COOLING WITH SINGLE SPEED INDOOR FAN MOTOR**

V–Ph–Hz	VOLTAGE RANGE		COMP (Cir 1)		COMP (Cir 2)		OFM (ea)		IFM		
	MIN	MAX	RLA	LRA	RLA	LRA	WATTS	FLA	TYPE	EFF at Full Load	FLA
208–3–60	187	253	13.7	83	13.7	83	325	1.5	STD	87%	5.2
							325	1.5	MED	87%	6.9
							325	1.5	HIGH	87%	10.6
230–3–60	187	253	13.7	83	13.7	83	325	1.5	STD	87%	4.9
							325	1.5	MED	87%	6.7
							325	1.5	HIGH	87%	10.6
460–3–60	414	506	6.2	41	6.2	41	325	0.8	STD	87%	2.5
							325	0.8	MED	87%	3.4
							325	0.8	HIGH	87%	5.3
575–3–60	518	633	4.8	33	4.8	33	325	0.6	STD	72%	1.6
							325	0.6	MED	78%	2
							325	0.6	HIGH	77%	2.8

Table 68 – 48HC11** — **2-STAGE COOLING WITH SINGLE SPEED INDOOR FAN MOTOR**

V–Ph–Hz	VOLTAGE RANGE		COMP (Cir 1)		COMP (Cir 2)		OFM (ea)		IFM		
	MIN	MAX	RLA	LRA	RLA	LRA	WATTS	FLA	TYPE	EFF at Full Load	FLA
208–3–60	187	253	15.9	110	15.9	110	610	7.4	STD	87%	6.9
							610	7.4	MED	87%	10.6
							610	7.4	HIGH	83%	13.6
230–3–60	187	253	15.9	110	15.9	110	610	7.4	STD	87%	6.7
							610	7.4	MED	87%	10.6
							610	7.4	HIGH	83%	12.7
460–3–60	414	506	7.0	52	7.0	52	610	3.6	STD	87%	3.4
							610	3.6	MED	87%	5.3
							610	3.6	HIGH	83%	6.4
575–3–60	518	633	5.1	40	5.1	40	610	3.6	STD	78%	2
							610	3.6	MED	77%	2.8
							610	3.6	HIGH	81%	5.6

Table 69 – 48HC12** **2-STAGE COOLING WITH SINGLE SPEED INDOOR FAN MOTOR**

V–Ph–Hz	VOLTAGE RANGE		COMP (Cir 1)		COMP (Cir 2)		OFM (ea)		IFM		
	MIN	MAX	RLA	LRA	RLA	LRA	WATTS	FLA	TYPE	EFF at Full Load	FLA
208–3–60	187	253	15.9	110	15.9	110	1070	6.2	STD	87%	6.9
							1070	6.2	MED	87%	10.6
							1070	6.2	HIGH	83%	13.6
230–3–60	187	253	15.9	110	15.9	110	1070	6.2	STD	87%	6.7
							1070	6.2	MED	87%	10.6
							1070	6.2	HIGH	83%	12.7
460–3–60	414	506	7.7	52	7.7	52	1070	3.1	STD	87%	3.4
							1070	3.1	MED	87%	5.3
							1070	3.1	HIGH	83%	6.4
575–3–60	518	633	5.7	39	5.7	39	1070	2.5	STD	78%	2
							1070	2.5	MED	77%	2.8
							1070	2.5	HIGH	81%	5.6

Table 70 – 48HC14** **2-STAGE COOLING WITH SINGLE SPEED INDOOR FAN MOTOR**

V–Ph–Hz	VOLTAGE RANGE		COMP (Cir 1)		COMP (Cir 2)		OFM (ea)		IFM		
	MIN	MAX	RLA	LRA	RLA	LRA	WATTS	FLA	TYPE	EFF at Full Load	FLA
208–3–60	187	253	19.0	123	19.0	123	280	1.5	STD	89%	8.4
							280	1.5	MED	87%	10.6
							280	1.5	HIGH	90%	20.4
230–3–60	187	253	19.0	123	19.0	123	280	1.5	STD	89%	8.3
							280	1.5	MED	87%	10.6
							280	1.5	HIGH	90%	20.4
460–3–60	414	506	9.7	62	9.7	62	280	0.8	STD	89%	4.2
							280	0.8	MED	87%	5.3
							280	0.8	HIGH	90%	10.2
575–3–60	518	633	7.4	50	7.4	50	280	0.7	STD	77%	2.8
							280	0.7	MED	77%	2.8
							280	0.7	HIGH	94%	9

ELECTRICAL INFORMATION

Table 71 – 48HC08** — **2-STAGE COOLING WITH 2-SPEED INDOOR FAN MOTOR**

V–Ph–Hz	VOLTAGE RANGE		COMP (Cir 1)		COMP (Cir 2)		OFM (ea)		IFM		
	MIN	MAX	RLA	LRA	RLA	LRA	WATTS	FLA	TYPE	EFF at Full Load	FLA
208–3–60	187	253	13.6	83	13.6	83	325	1.5	STD	84%	5.8
							325	1.5	MED	77%	7.1
							325	1.5	HIGH	82%	10.8
230–3–60	187	253	13.6	83	13.6	83	325	1.5	STD	84%	5.6
							325	1.5	MED	77%	6.8
							325	1.5	HIGH	82%	9.8
460–3–60	414	506	6.1	41	6.1	41	325	0.8	STD	79%	2.9
							325	0.8	MED	77%	3.8
							325	0.8	HIGH	82%	4.9
575–3–60	518	633	4.2	33	4.2	33	325	0.6	STD	81%	2.8
							325	0.6	MED	80%	3.5
							325	0.6	HIGH	84%	4.5

Table 72 – 48HC09** — **2-STAGE COOLING WITH 2-SPEED INDOOR FAN MOTOR**

V–Ph–Hz	VOLTAGE RANGE		COMP (Cir 1)		COMP (Cir 2)		OFM (ea)		IFM		
	MIN	MAX	RLA	LRA	RLA	LRA	WATTS	FLA	TYPE	EFF at Full Load	FLA
208–3–60	187	253	13.7	83	13.7	83	325	1.5	STD	84%	5.8
							325	1.5	MED	77%	7.1
							325	1.5	HIGH	82%	10.8
230–3–60	187	253	13.7	83	13.7	83	325	1.5	STD	84%	5.6
							325	1.5	MED	77%	6.8
							325	1.5	HIGH	82%	9.8
460–3–60	414	506	6.2	41	6.2	41	325	0.8	STD	79%	2.9
							325	0.8	MED	77%	3.8
							325	0.8	HIGH	82%	4.9
575–3–60	518	633	4.8	33	4.8	33	325	0.6	STD	81%	2.8
							325	0.6	MED	80%	3.5
							325	0.6	HIGH	84%	4.5

Table 73 – 48HC11** — **2-STAGE COOLING WITH 2-SPEED INDOOR FAN MOTOR**

V–Ph–Hz	VOLTAGE RANGE		COMP (Cir 1)		COMP (Cir 2)		OFM (ea)		IFM		
	MIN	MAX	RLA	LRA	RLA	LRA	WATTS	FLA	TYPE	EFF at Full Load	FLA
208–3–60	187	253	15.9	110	15.9	110	610	7.4	STD	77%	7.1
							610	7.4	MED	82%	10.8
							610	7.4	HIGH	84%	13.6
230–3–60	187	253	15.9	110	15.9	110	610	7.4	STD	77%	6.8
							610	7.4	MED	82%	9.8
							610	7.4	HIGH	84%	12.7
460–3–60	414	506	7.0	52	7.0	52	610	3.6	STD	77%	3.8
							610	3.6	MED	82%	4.9
							610	3.6	HIGH	84%	6.4
575–3–60	518	633	5.1	40	5.1	40	610	3.6	STD	80%	3.5
							610	3.6	MED	84%	4.5
							610	3.6	HIGH	83%	6.2

Table 74 – 48HC12** **2-STAGE COOLING WITH 2-SPEED INDOOR FAN MOTOR**

V–Ph–Hz	VOLTAGE RANGE		COMP (Cir 1)		COMP (Cir 2)		OFM (ea)		IFM		
	MIN	MAX	RLA	LRA	RLA	LRA	WATTS	FLA	TYPE	EFF at Full Load	FLA
208–3–60	187	253	15.9	110	15.9	110	1070	6.2	STD	77%	7.1
							1070	6.2	MED	82%	10.8
							1070	6.2	HIGH	84%	13.6
230–3–60	187	253	15.9	110	15.9	110	1070	6.2	STD	77%	6.8
							1070	6.2	MED	82%	9.8
							1070	6.2	HIGH	84%	12.7
460–3–60	414	506	7.7	52	7.7	52	1070	3.1	STD	77%	3.8
							1070	3.1	MED	82%	4.9
							1070	3.1	HIGH	84%	6.4
575–3–60	518	633	5.7	39	5.7	39	1070	2.5	STD	80%	3.5
							1070	2.5	MED	84%	4.5
							1070	2.5	HIGH	83%	6.2

Table 75 – 48HC14** **2-STAGE COOLING WITH 2-SPEED INDOOR FAN MOTOR**

V–Ph–Hz	VOLTAGE RANGE		COMP (Cir 1)		COMP (Cir 2)		OFM (ea)		IFM		
	MIN	MAX	RLA	LRA	RLA	LRA	WATTS	FLA	TYPE	EFF at Full Load	FLA
208–3–60	187	253	19.0	123	19.0	123	280	1.5	STD	85%	8.6
							280	1.5	MED	82%	10.8
							280	1.5	HIGH	90%	20.4
230–3–60	187	253	19.0	123	19.0	123	280	1.5	STD	85%	7.8
							280	1.5	MED	82%	9.8
							280	1.5	HIGH	90%	20.4
460–3–60	414	506	9.7	62	9.7	62	280	0.8	STD	85%	3.8
							280	0.8	MED	82%	4.9
							280	0.8	HIGH	90%	10.2
575–3–60	518	633	7.4	50	7.4	50	280	0.7	STD	84%	4.5
							280	0.7	MED	84%	4.5
							280	0.7	HIGH	94%	9

ELECTRICAL INFORMATION

Table 76 – UNIT WIRE/FUSE OR HACR BREAKER SIZING DATA WITH SINGLES SPEED INDOOR FAN MOTOR

UNIT	NOM. V–Ph–Hz	IFM TYPE	NO C.O. or UNPWR C.O.								w/ PWRD C.O.							
			NO P.E.				w/ P.E. (pwrd fr/ unit)				NO P.E.				w/ P.E. (pwrd fr/ unit)			
			MCA	MAX FUSE or HACR BRKR	DISC. SIZE		MCA	MAX FUSE or HACR BRKR	DISC. SIZE		MCA	MAX FUSE or HACR BRKR	DISC. SIZE		MCA	MAX FUSE or HACR BRKR	DISC. SIZE	
					FLA	LRA			FLA	LRA			FLA	LRA			FLA	LRA
48HC*A04	208/230–1–60	DD–STD	30	45	29	88	32	45	31	90	–	–	–	–	–	–	–	–
		STD	27	40	26	93	29	45	28	95	–	–	–	–	–	–	–	–
		MED	27	40	26	93	29	45	28	95	–	–	–	–	–	–	–	–
	208/230–3–60	DD–STD	22	30	22	82	24	30	24	84	27	30	27	87	29	35	29	89
		STD	20	25	19	94	22	30	21	96	24	30	25	99	26	30	27	101
		MED	20	25	19	94	22	30	21	96	24	30	25	99	26	30	27	101
		HIGH	21/21	30/30	21/21	132	23/23	30/30	23/23	134	26/26	30/30	27/26	137	28/28	35/35	29/29	139
	460–3–60	DD–STD	12	15	12	43	13	15	13	44	14	20	14	45	15	20	16	46
		STD	11	15	10	48	12	15	11	49	13	15	13	50	14	20	14	51
		MED	11	15	10	48	12	15	11	49	13	15	13	50	14	20	14	51
		HIGH	12	15	11	67	13	15	12	68	14	15	14	69	15	20	15	70
	575–3–60	DD–STD	10	15	10	42	12	15	12	44	11	15	12	44	13	15	14	46
		STD	7	15	6	45	9	15	9	47	9	15	8	47	11	15	10	49
		MED	7	15	6	45	9	15	9	47	9	15	8	47	11	15	10	49
		HIGH	8	15	7	49	10	15	9	51	9	15	9	51	11	15	11	53
48HC*A05	208/230–1–60	DD–STD	37	50	35	127	38	50	37	129	–	–	–	–	–	–	–	–
		STD	34	50	32	132	36	50	35	134	–	–	–	–	–	–	–	–
		MED	34	50	32	132	36	50	35	134	–	–	–	–	–	–	–	–
	208/230–3–60	DD–STD	26	30	26	93	28	40	28	95	31	40	31	98	33	45	34	100
		STD	24	30	23	105	26	30	26	107	29	40	29	110	31	40	31	112
		MED	24/24	30/30	23/23	122	26/26	30/30	26/25	124	29/29	40/40	29/29	127	31/31	40/40	31/31	129
		HIGH	27/27	40/40	27/27	158	29/29	40/40	29/29	160	32/32	45/45	33/32	163	34/34	45/45	35/35	165
	460–3–60	DD–STD	13	15	13	47	14	20	14	48	15	20	15	49	16	20	16	50
		STD	12	15	11	52	13	15	12	53	14	20	14	54	15	20	15	55
		MED	12	15	11	61	13	15	12	62	14	15	14	63	15	20	15	64
		HIGH	13	15	13	79	14	20	14	80	16	20	16	81	17	20	17	82
	575–3–60	DD–STD	11	15	11	39	13	15	13	41	13	15	13	41	15	20	15	43
		STD	9	15	8	42	10	15	10	44	10	15	10	44	12	15	12	46
		MED	9	15	8	42	11	15	11	44	11	15	10	44	13	15	13	46
		HIGH	10	15	10	57	12	15	12	59	12	15	12	59	14	15	14	61

ELECTRICAL INFORMATION

Table 76 - UNIT WIRE/FUSE OR HACR BREAKER SIZING DATA WITH SINGLES SPEED INDOOR FAN MOTOR (cont)

UNIT	NOM. V–Ph–Hz	IFM TYPE	NO C.O. or UNPWR C.O.								w/ PWRD C.O.							
			NO P.E.				w/ P.E. (pwrd fr/ unit)				NO P.E.				w/ P.E. (pwrd fr/ unit)			
			MCA	MAX FUSE or HACR BRKR	DISC. SIZE		MCA	MAX FUSE or HACR BRKR	DISC. SIZE		MCA	MAX FUSE or HACR BRKR	DISC. SIZE		MCA	MAX FUSE or HACR BRKR	DISC. SIZE	
					FLA	LRA			FLA	LRA			FLA	LRA			FLA	LRA
48HC*A06	208/230–1–60	DD–STD	41	60	39	144	42	60	41	146	–	–	–	–	–	–	–	–
		STD	38	60	36	149	40	60	38	151	–	–	–	–	–	–	–	–
		MED	40	60	38	174	42	60	41	176	–	–	–	–	–	–	–	–
	208/230–3–60	DD–STD	29	40	28	120	31	45	31	122	34	45	34	125	36	50	36	127
		STD	27	40	26	132	29	40	28	134	32	45	31	137	34	45	34	139
		MED	29/28	40/40	28/28	170	31/30	45/45	30/30	172	33/33	45/45	33/33	175	35/35	50/50	36/35	177
		HIGH	30/30	45/45	30/29	185	32/32	45/45	32/32	187	35/35	50/50	35/35	190	37/37	50/50	37/37	192
	460–3–60	DD–STD	14	20	14	58	15	20	15	59	16	20	16	60	17	20	17	61
		STD	13	15	12	63	14	20	13	64	15	20	15	65	16	20	16	66
		MED	14	20	13	82	15	20	14	83	16	20	16	84	17	20	17	85
		HIGH	14	20	14	90	15	20	15	91	17	20	16	92	18	20	18	93
	575–3–60	DD–STD	12	15	12	46	14	15	14	48	13	15	13	48	15	20	16	50
		STD	9	15	8	49	11	15	10	51	11	15	10	51	13	15	12	53
		MED	10	15	9	53	12	15	11	55	11	15	11	55	13	15	13	57
		HIGH	11	15	10	64	12	15	12	66	12	15	12	66	14	15	14	68
48HC*A07	208/230–3–60	STD	32/32	50/50	31/31	165	36/36	50/50	36/35	169	37/37	50/50	37/36	170	41/41	50/50	41/41	174
		MED	36/36	50/50	35/35	201	39/39	50/50	39/39	205	40/40	50/50	40/40	206	44/44	60/60	45/45	210
		HIGH	41/40	50/50	41/40	217	45/44	60/60	45/44	221	46/45	60/60	46/45	222	49/49	60/60	51/50	226
	460–3–60	STD	17	25	16	84	18	25	18	86	19	25	18	86	21	25	20	88
		MED	18	25	18	102	20	25	20	104	21	25	20	104	22	30	22	106
		HIGH	21	25	20	110	22	30	22	112	23	30	23	112	25	30	25	114
	575–3–60	STD	13	15	12	61	16	20	16	65	14	20	14	63	18	20	18	67
		MED	14	20	13	76	18	20	17	80	15	20	15	78	19	25	19	82
		HIGH	17	20	16	90	20	25	21	94	18	25	18	92	22	25	23	96
48HC*D08	208/230–3–60	STD	39/39	50/50	41/40	208	43/43	50/50	45/45	212	44/44	50/50	46/46	213	48/48	60/60	51/50	217
		MED	41/41	50/50	43/42	229	45/45	50/50	47/47	233	46/46	50/50	48/48	234	50/49	60/60	53/52	238
		HIGH	45	50	47	258	48	60	51	262	49	60	52	263	53	60	57	267
	460–3–60	STD	18	20	19	104	20	25	21	106	20	25	21	106	22	25	23	108
		MED	19	25	20	114	21	25	22	116	21	25	22	116	23	25	24	118
		HIGH	21	25	22	129	23	25	24	131	23	25	24	131	25	30	27	133
	575–3–60	STD	13	15	13	77	17	20	17	81	14	15	15	79	18	20	19	83
		MED	13	15	13	81	17	20	18	85	15	20	15	83	19	20	20	87
		HIGH	14	15	14	92	18	20	19	96	16	20	16	94	19	25	21	98

ELECTRICAL INFORMATION

Table 76 - UNIT WIRE/FUSE OR HACR BREAKER SIZING DATA WITH SINGLES SPEED INDOOR FAN MOTOR (cont)

UNIT	NOM. V–Ph–Hz	IFM TYPE	NO C.O. or UNPWR C.O.								w/ PWRD C.O.							
			NO P.E.				w/ P.E. (pwrd fr/ unit)				NO P.E.				w/ P.E. (pwrd fr/ unit)			
			MCA	MAX FUSE or HACR BRKR	DISC. SIZE		MCA	MAX FUSE or HACR BRKR	DISC. SIZE		MCA	MAX FUSE or HACR BRKR	DISC. SIZE		MCA	MAX FUSE or HACR BRKR	DISC. SIZE	
					FLA	LRA			FLA	LRA			FLA	LRA			FLA	LRA
48HC*D09	208/230–3–60	STD	39/39	50/50	41/41	208	43/43	50/50	45/45	212	44/44	50/50	46/46	213	48/48	60/60	51/50	217
		MED	41/41	50/50	43/43	229	45/45	50/50	47/47	233	46/46	50/50	48/48	234	50/50	60/60	53/53	238
		HIGH	45	50	47	258	49	60	52	262	50	60	53	263	53	60	57	267
	460–3–60	STD	19	20	19	104	20	25	21	106	21	25	22	106	23	25	24	108
		MED	19	25	20	114	21	25	22	116	22	25	23	116	23	25	25	118
		HIGH	21	25	22	129	23	25	24	131	24	25	25	131	25	30	27	133
	575–3–60	STD	14	15	14	77	18	20	19	81	16	20	16	79	20	25	21	83
		MED	14	20	15	81	18	20	19	85	16	20	17	83	20	25	21	87
		HIGH	15	20	16	92	19	20	20	96	17	20	18	94	21	25	22	98
48HC*D11	208/230–3–60	STD	51/50	60/60	53/53	284	54/54	60/60	57/57	288	55/55	60/60	59/58	289	59/59	70/70	63/63	293
		MED	54	60	57	313	58	70	62	317	59	70	63	318	63	70	67	322
		HIGH	57/56	70/60	61/60	315	61/60	70/70	65/64	319	62/61	70/70	66/65	320	66/65	80/80	71/70	324
	460–3–60	STD	23	25	24	136	25	30	26	138	25	30	27	138	27	30	29	140
		MED	25	30	26	151	27	30	28	153	27	30	29	153	29	35	31	155
		HIGH	26	30	28	152	28	30	30	154	28	30	30	154	30	35	32	156
	575–3–60	STD	18	20	18	95	21	25	23	99	19	25	20	97	23	25	24	101
		MED	18	20	19	106	22	25	23	110	20	25	21	108	24	25	25	112
		HIGH	21	25	22	120	25	30	27	124	23	25	24	122	27	30	29	126
48HC*D12	208/230–3–60	STD	49/49	60/60	52/51	309	53/53	60/60	56/56	313	54/54	60/60	57/57	314	58/58	70/70	62/61	318
		MED	53	60	56	338	57	70	60	342	58	70	61	343	62	70	66	347
		HIGH	56/55	60/60	59/58	340	60/59	70/70	64/63	344	61/60	70/70	65/64	345	65/64	80/70	69/68	349
	460–3–60	STD	24	30	25	148	26	30	27	150	26	30	28	150	28	30	30	152
		MED	26	30	27	163	28	30	29	165	28	30	30	165	30	35	32	167
		HIGH	27	30	29	164	29	35	31	166	29	35	31	166	31	35	33	168
	575–3–60	STD	18	20	18	105	22	25	23	109	19	25	20	107	23	25	25	111
		MED	19	20	19	116	22	25	24	120	20	25	21	118	24	30	26	122
		HIGH	21	25	22	130	25	30	27	134	23	25	24	132	27	30	29	136
48HC*D14	208/230–3–60	STD	56/56	70/70	59/58	330	60/60	70/70	63/63	334	61/61	70/70	64/64	335	65/65	80/80	68/68	339
		MED	58	70	61	344	62	80	65	348	63	80	67	349	67	80	71	353
		HIGH	68	80	72	350	72	80	77	354	73	80	78	355	77	90	82	359
	460–3–60	STD	29	35	30	166	31	35	32	168	31	40	32	168	33	40	35	170
		MED	30	35	31	173	32	40	33	175	32	40	34	175	34	40	36	177
		HIGH	35	40	37	176	37	45	39	178	37	45	39	178	39	45	41	180
	575–3–60	STD	22	25	23	128	26	30	27	132	24	30	25	130	28	30	29	134
		MED	22	25	23	128	26	30	27	132	24	30	25	130	28	30	29	134
		HIGH	29	35	30	140	32	40	34	144	30	35	32	142	34	40	36	146

ELECTRICAL INFORMATION

Table 77 – UNIT WIRE SIZING DATA WITH FACTORY INSTALLED HACR BREAKER WITH SINGLES SPEED INDOOR FAN MOTOR

UNIT	NOM. V–Ph–Hz	IFM TYPE	NO C.O. or UNPWR C.O.								w/ PWRD C.O.							
			NO P.E.				w/ P.E. (pwrd fr/ unit)				NO P.E.				w/ P.E. (pwrd fr/ unit)			
			MCA	HACR BRKR	DISC. SIZE		MCA	HACR BRKR	DISC. SIZE		MCA	HACR BRKR	DISC. SIZE		MCA	HACR BRKR	DISC. SIZE	
					FLA	LRA			FLA	LRA			FLA	LRA			FLA	LRA
48HC*A04	208/230–1–60	DD–STD	30	45	29	88	32	45	31	90	–	–	–	–	–	–	–	–
		STD	27	40	26	93	29	45	28	95	–	–	–	–	–	–	–	–
		MED	27	40	26	93	29	45	28	95	–	–	–	–	–	–	–	–
	208/230–3–60	DD–STD	22	30	22	82	24	30	24	84	27	30	27	87	29	35	29	89
		STD	20	25	19	94	22	30	21	96	24	30	25	99	26	30	27	101
		MED	20	25	19	94	22	30	21	96	24	30	25	99	26	30	27	101
		HIGH	21/21	30/30	21/21	132	23/23	30/30	23/23	134	26/26	30/30	27/26	137	28/28	35/35	29/29	139
	460–3–60	DD–STD	12	15	12	43	13	15	13	44	14	20	14	45	15	20	16	46
		STD	11	15	10	48	12	15	11	49	13	15	13	50	14	20	14	51
		MED	11	15	10	48	12	15	11	49	13	15	13	50	14	20	14	51
		HIGH	12	15	11	67	13	15	12	68	14	15	14	69	15	20	15	70
	575–3–60	DD–STD	10	15	10	42	12	15	12	44	11	15	12	44	13	15	14	46
		STD	7	15	6	45	9	15	9	47	9	15	8	47	11	15	10	49
		MED	7	15	6	45	9	15	9	47	9	15	8	47	11	15	10	49
		HIGH	8	15	7	49	10	15	9	51	9	15	9	51	11	15	11	53
48HC*A05	208/230–1–60	DD–STD	37	50	35	127	38	50	37	129	–	–	–	–	–	–	–	–
		STD	34	50	32	132	36	50	35	134	–	–	–	–	–	–	–	–
		MED	34	50	32	132	36	50	35	134	–	–	–	–	–	–	–	–
	208/230–3–60	DD–STD	26	30	26	93	28	40	28	95	31	40	31	98	33	45	34	100
		STD	24	30	23	105	26	30	26	107	29	40	29	110	31	40	31	112
		MED	24/24	30/30	23/23	122	26/26	30/30	26/25	124	29/29	40/40	29/29	127	31/31	40/40	31/31	129
		HIGH	27/27	40/40	27/27	158	29/29	40/40	29/29	160	32/32	45/45	33/32	163	34/34	45/45	35/35	165
	460–3–60	DD–STD	13	15	13	47	14	20	14	48	15	20	15	49	16	20	16	50
		STD	12	15	11	52	13	15	12	53	14	20	14	54	15	20	15	55
		MED	12	15	11	61	13	15	12	62	14	15	14	63	15	20	15	64
		HIGH	13	15	13	79	14	20	14	80	16	20	16	81	17	20	17	82
	575–3–60	DD–STD	11	15	11	39	13	15	13	41	13	15	13	41	15	20	15	43
		STD	9	15	8	42	10	15	10	44	10	15	10	44	12	15	12	46
		MED	9	15	8	42	11	15	11	44	11	15	10	44	13	15	13	46
		HIGH	10	15	10	57	12	15	12	59	12	15	12	59	14	15	14	61

ELECTRICAL INFORMATION

Table 77 - UNIT WIRE SIZING DATA WITH FACTORY INSTALLED HACR BREAKER WITH SINGLES SPEED INDOOR FAN MOTOR (cont)

UNIT	NOM. V–Ph–Hz	IFM TYPE	NO C.O. or UNPWR C.O.								w/ PWRD C.O.							
			NO P.E.				w/ P.E. (pwrd fr/ unit)				NO P.E.				w/ P.E. (pwrd fr/ unit)			
			MCA	HACR BRKR	DISC. SIZE		MCA	HACR BRKR	DISC. SIZE		MCA	HACR BRKR	DISC. SIZE		MCA	HACR BRKR	DISC. SIZE	
					FLA	LRA			FLA	LRA			FLA	LRA			FLA	LRA
48HC*A06	208/230–1–60	DD–STD	41	60	39	144	42	60	41	146	–	–	–	–	–	–	–	–
		STD	38	60	36	149	40	60	38	151	–	–	–	–	–	–	–	–
		MED	40	60	38	174	42	60	41	176	–	–	–	–	–	–	–	–
	208/230–3–60	DD–STD	29	40	28	120	31	45	31	122	34	45	34	125	36	50	36	127
		STD	27	40	26	132	29	40	28	134	32	45	31	137	34	45	34	139
		MED	29/29	40/40	28/28	170	31/31	45/45	30/30	172	33/33	45/45	33/33	175	35/35	50/50	36/35	177
		HIGH	30/30	45/45	30/29	185	32/32	45/45	32/32	187	35/35	50/50	35/35	190	37/37	50/50	37/37	192
	460–3–60	DD–STD	14	20	14	58	15	20	15	59	16	20	16	60	17	20	17	61
		STD	13	15	12	63	14	20	13	64	15	20	15	65	16	20	16	66
		MED	14	20	13	82	15	20	14	83	16	20	16	84	17	20	17	85
		HIGH	14	20	14	90	15	20	15	91	17	20	16	92	18	20	18	93
	575–3–60	DD–STD	12	15	12	46	14	15	14	48	13	15	13	48	15	20	16	50
		STD	9	15	8	49	11	15	10	51	11	15	10	51	13	15	12	53
		MED	10	15	9	53	12	15	11	55	11	15	11	55	13	15	13	57
		HIGH	11	15	10	64	12	15	12	66	12	15	12	66	14	15	14	68
48HC*A07	208/230–3–60	STD	32/32	50/50	31/31	165	36/36	50/50	36/35	169	37/37	50/50	37/36	170	41/41	50/50	41/41	174
		MED	36/36	50/50	35/35	201	39/39	50/50	39/39	205	40/40	50/50	40/40	206	44/44	60/60	45/45	210
		HIGH	41/41	50/50	41/40	217	45/45	60/60	45/44	221	46/46	60/60	46/45	222	49/49	60/60	51/50	226
	460–3–60	STD	17	25	16	84	18	25	18	86	19	25	18	86	21	25	20	88
		MED	18	25	18	102	20	25	20	104	21	25	20	104	22	30	22	106
		HIGH	21	25	20	110	22	30	22	112	23	30	23	112	25	30	25	114
	575–3–60	STD	13	15	12	61	16	20	16	65	14	20	14	63	18	20	18	67
		MED	14	20	13	76	18	20	17	80	15	20	15	78	19	25	19	82
		HIGH	17	20	16	90	20	25	21	94	18	25	18	92	22	25	23	96
48HC*D08	208/230–3–60	STD	39/39	50/50	41/40	208	43/43	50/50	45/45	212	44/44	50/50	46/46	213	48/48	60/60	51/50	217
		MED	41/41	50/50	43/42	229	45/45	50/50	47/47	233	46/46	50/50	48/48	234	50/50	60/60	53/52	238
		HIGH	45	50	47	258	48	60	51	262	49	60	52	263	53	60	57	267
	460–3–60	STD	18	20	19	104	20	25	21	106	20	25	21	106	22	25	23	108
		MED	19	25	20	114	21	25	22	116	21	25	22	116	23	25	24	118
		HIGH	21	25	22	129	23	25	24	131	23	25	24	131	25	30	27	133
	575–3–60	STD	13	15	13	77	17	20	17	81	14	15	15	79	18	20	19	83
		MED	13	15	13	81	17	20	18	85	15	20	15	83	19	20	20	87
		HIGH	14	15	14	92	18	20	19	96	16	20	16	94	19	25	21	98

ELECTRICAL INFORMATION

Table 77 - UNIT WIRE SIZING DATA WITH FACTORY INSTALLED HACR BREAKER WITH SINGLES SPEED INDOOR FAN MOTOR (cont)

UNIT	NOM. V–Ph–Hz	IFM TYPE	NO C.O. or UNPWR C.O.								w/ PWRD C.O.							
			NO P.E.				w/ P.E. (pwrd fr/ unit)				NO P.E.				w/ P.E. (pwrd fr/ unit)			
			MCA	HACR BRKR	DISC. SIZE		MCA	HACR BRKR	DISC. SIZE		MCA	HACR BRKR	DISC. SIZE		MCA	HACR BRKR	DISC. SIZE	
					FLA	LRA			FLA	LRA			FLA	LRA			FLA	LRA
48HC*D09	208/230–3–60	STD	39/39	50/50	41/41	208	43/43	50/50	45/45	212	44/44	50/50	46/46	213	48/48	60/60	51/50	217
		MED	41/41	50/50	43/43	229	45/45	50/50	47/47	233	46/46	50/50	48/48	234	50/50	60/60	53/53	238
		HIGH	45	50	47	258	49	60	52	262	50	60	53	263	53	60	57	267
	460–3–60	STD	19	20	19	104	20	25	21	106	21	25	22	106	23	25	24	108
		MED	19	25	20	114	21	25	22	116	22	25	23	116	23	25	25	118
		HIGH	21	25	22	129	23	25	24	131	24	25	25	131	25	30	27	133
	575–3–60	STD	14	15	14	77	18	20	19	81	16	20	16	79	20	25	21	83
		MED	14	20	15	81	18	20	19	85	16	20	17	83	20	25	21	87
		HIGH	15	20	16	92	19	20	20	96	17	20	18	94	21	25	22	98
48HC*D11	208/230–3–60	STD	51/51	60/60	53/53	284	54/54	60/60	57/57	288	55/55	60/60	59/58	289	59/59	70/70	63/63	293
		MED	54	60	57	313	58	70	62	317	59	70	63	318	63	70	67	322
		HIGH	57/57	70/70	61/60	315	61/61	70/70	65/64	319	62/62	70/70	66/65	320	66/66	80/80	71/70	324
	460–3–60	STD	23	25	24	136	25	30	26	138	25	30	27	138	27	30	29	140
		MED	25	30	26	151	27	30	28	153	27	30	29	153	29	35	31	155
		HIGH	26	30	28	152	28	30	30	154	28	30	30	154	30	35	32	156
	575–3–60	STD	18	20	18	95	21	25	23	99	19	25	20	97	23	25	24	101
		MED	18	20	19	106	22	25	23	110	20	25	21	108	24	25	25	112
		HIGH	21	25	22	120	25	30	27	124	23	25	24	122	27	30	29	126
48HC*D12	208/230–3–60	STD	49/49	60/60	52/51	309	53/53	60/60	56/56	313	54/54	60/60	57/57	314	58/58	70/70	62/61	318
		MED	53	60	56	338	57	70	60	342	58	70	61	343	62	70	66	347
		HIGH	56/56	60/60	59/58	340	60/60	70/70	64/63	344	61/61	70/70	65/64	345	65/65	80/80	69/68	349
	460–3–60	STD	24	30	25	148	26	30	27	150	26	30	28	150	28	30	30	152
		MED	26	30	27	163	28	30	29	165	28	30	30	165	30	35	32	167
		HIGH	27	30	29	164	29	35	31	166	29	35	31	166	31	35	33	168
	575–3–60	STD	18	20	18	105	22	25	23	109	19	25	20	107	23	25	25	111
		MED	19	20	19	116	22	25	24	120	20	25	21	118	24	30	26	122
		HIGH	21	25	22	130	25	30	27	134	23	25	24	132	27	30	29	136
48HC*D14	208/230–3–60	STD	56/56	70/70	59/58	330	60/60	70/70	63/63	334	61/61	70/70	64/64	335	65/65	80/80	68/68	339
		MED	58	70	61	344	62	80	65	348	63	80	67	349	67	80	71	353
		HIGH	68	80	72	350	72	80	77	354	73	80	78	355	77	90	82	359
	460–3–60	STD	29	35	30	166	31	35	32	168	31	40	32	168	33	40	35	170
		MED	30	35	31	173	32	40	33	175	32	40	34	175	34	40	36	177
		HIGH	35	40	37	176	37	45	39	178	37	45	39	178	39	45	41	180
	575–3–60	STD	22	25	23	128	26	30	27	132	24	30	25	130	28	30	29	134
		MED	22	25	23	128	26	30	27	132	24	30	25	130	28	30	29	134
		HIGH	29	35	30	140	32	40	34	144	30	35	32	142	34	40	36	146

ELECTRICAL INFORMATION

Table 78 – UNIT WIRE SIZING DATA WITH FACTORY INSTALLED 2 SPEED INDOOR FAN OPTION

UNIT	NOM. V–Ph–Hz	IFM TYPE	NO C.O. or UNPWR C.O.								w/ PWRD C.O.							
			NO P.E.				w/ P.E. (pwrd fr/ unit)				NO P.E.				w/ P.E. (pwrd fr/ unit)			
			MCA	MAX FUSE or HACR BRKR	DISC. SIZE		MCA	MAX FUSE or HACR BRKR	DISC. SIZE		MCA	MAX FUSE or HACR BRKR	DISC. SIZE		MCA	MAX FUSE or HACR BRKR	DISC. SIZE	
					FLA	LRA			FLA	LRA			FLA	LRA			FLA	LRA
48HC*D08	208/230–3–60	STD	40/40	50/50	41/41	195	44/43	50/50	46/46	199	45/44	50/50	47/47	200	48/48	60/60	51/51	204
		MED	41/41	50/50	43/43	199	45/45	50/50	47/47	203	46/46	50/50	48/48	204	50/49	60/60	53/52	208
		HIGH	45/44	50/50	47/46	249	49/48	60/60	52/50	253	50/49	60/60	53/52	254	53/52	60/60	57/56	258
	460–3–60	STD	19	20	19	97	20	25	21	99	21	25	22	99	23	25	24	101
		MED	20	25	20	100	21	25	22	102	22	25	23	102	24	25	25	104
		HIGH	21	25	22	125	22	25	24	127	23	25	24	127	25	30	26	129
	575–3–60	STD	14	15	14	79	18	20	19	83	16	20	16	81	19	25	21	85
		MED	15	20	15	83	18	20	19	87	16	20	17	85	20	25	21	89
		HIGH	16	20	16	92	19	25	21	96	17	20	18	94	21	25	23	98
48HC*D09	208/230–3–60	STD	40/40	50/50	42/41	195	44/44	50/50	46/46	199	45/45	50/50	47/47	200	49/48	60/60	52/51	204
		MED	41/41	50/50	43/43	199	45/45	50/50	47/47	203	46/46	50/50	49/48	204	50/50	60/60	53/53	208
		HIGH	45/44	50/50	47/46	249	49/48	60/60	52/51	253	50/49	60/60	53/52	254	54/53	60/60	57/56	258
	460–3–60	STD	19	25	19	97	21	25	22	99	21	25	22	99	23	25	24	101
		MED	20	25	20	100	22	25	23	102	22	25	23	102	24	25	25	104
		HIGH	21	25	22	125	23	25	24	127	23	25	24	127	25	30	26	129
	575–3–60	STD	15	20	16	79	19	20	20	83	17	20	18	81	21	25	22	85
		MED	16	20	16	83	20	25	21	87	18	20	18	85	21	25	23	89
		HIGH	17	20	18	92	21	25	22	96	19	20	20	94	22	25	24	98
48HC*D11	208/230–3–60	STD	51/50	60/60	53/53	254	55/54	60/60	58/57	258	56/55	60/60	59/58	259	59/59	70/70	63/63	263
		MED	54/53	60/60	58/56	304	58/57	70/70	62/61	308	59/58	70/70	63/62	309	63/62	70/70	67/66	313
		HIGH	57/56	70/60	61/60	315	61/60	70/70	65/64	319	62/61	70/70	66/65	320	66/65	80/80	71/70	324
	460–3–60	STD	24	30	25	122	25	30	27	124	26	30	27	124	28	30	29	126
		MED	25	30	26	147	27	30	28	149	27	30	28	149	29	35	30	151
		HIGH	26	30	28	152	28	30	30	154	28	30	30	154	30	35	32	156
	575–3–60	STD	19	20	20	97	23	25	24	101	21	25	22	99	25	30	26	103
		MED	20	25	21	106	24	25	25	110	22	25	23	108	26	30	27	112
		HIGH	22	25	23	120	26	30	27	124	24	25	25	122	28	30	29	126

ELECTRICAL INFORMATION

Table 78 - UNIT WIRE SIZING DATA WITH FACTORY INSTALLED 2 SPEED INDOOR FAN OPTION (cont)

UNIT	NOM. V–Ph–Hz	IFM TYPE	NO C.O. or UNPWR C.O.								w/ PWRD C.O.							
			NO P.E.				w/ P.E. (pwrd fr/ unit)				NO P.E.				w/ P.E. (pwrd fr/ unit)			
			MCA	MAX FUSE or HACR BRKR	DISC. SIZE		MCA	MAX FUSE or HACR BRKR	DISC. SIZE		MCA	MAX FUSE or HACR BRKR	DISC. SIZE		MCA	MAX FUSE or HACR BRKR	DISC. SIZE	
					FLA	LRA			FLA	LRA			FLA	LRA			FLA	LRA
48HC*D12	208/230–3–60	STD	50/49	60/60	52/52	279	53/53	60/60	56/56	283	54/54	60/60	57/57	284	58/58	70/70	62/61	288
		MED	53/52	60/60	56/55	329	57/56	70/60	60/59	333	58/57	70/70	62/60	334	62/61	70/70	66/65	338
		HIGH	56/55	60/60	59/58	340	60/59	70/70	64/63	344	61/60	70/70	65/64	345	65/64	80/70	69/68	349
	460–3–60	STD	25	30	26	134	26	30	28	136	27	30	28	136	29	35	30	138
		MED	26	30	27	159	28	30	29	161	28	30	29	161	30	35	32	163
		HIGH	27	30	29	164	29	35	31	166	29	35	31	166	31	35	33	168
	575–3–60	STD	19	25	20	107	23	25	24	111	21	25	22	109	25	30	26	113
		MED	20	25	21	116	24	30	26	120	22	25	23	118	26	30	27	122
		HIGH	22	25	23	130	26	30	27	134	24	25	25	132	28	30	29	136
48HC*D14	208/230–3–60	STD	56/56	70/60	59/58	311	60/59	70/70	63/62	315	61/60	70/70	64/63	316	65/64	80/80	69/68	320
		MED	59/58	70/70	61/60	335	62/61	80/70	66/65	339	63/62	80/80	67/66	340	67/66	80/80	71/70	344
		HIGH	68	80	72	350	72	80	77	354	73	80	78	355	77	90	82	359
	460–3–60	STD	28	35	29	157	30	35	32	159	31	35	32	159	32	40	34	161
		MED	30	35	31	169	31	40	33	171	32	40	33	171	34	40	35	173
		HIGH	35	40	37	176	37	45	39	178	37	45	39	178	39	45	41	180
	575–3–60	STD	24	30	25	128	28	30	29	132	25	30	27	130	29	35	31	134
		MED	24	30	25	128	28	30	29	132	25	30	27	130	29	35	31	134
		HIGH	29	35	30	140	32	40	34	144	30	35	32	142	34	40	36	146

ELECTRICAL INFORMATION

Table 79 – UNIT WIRE SIZING DATA WITH FACTORY INSTALLED HACR BREAKER AND 2 SPEED INDOOR FAN OPTION

UNIT	NOM. V–Ph–Hz	IFM TYPE	NO C.O. or UNPWR C.O.								w/ PWRD C.O.							
			NO P.E.				w/ P.E. (pwrd fr/ unit)				NO P.E.				w/ P.E. (pwrd fr/ unit)			
			MCA	HACR BRKR	DISC. SIZE		MCA	HACR BRKR	DISC. SIZE		MCA	HACR BRKR	DISC. SIZE		MCA	HACR BRKR	DISC. SIZE	
48HC*D08	208/230–3–60	STD	40/40	50/50	41/41	195	44/44	50/50	46/46	199	45/45	50/50	47/47	200	48/48	60/60	51/51	204
		MED	41/41	50/50	43/43	199	45/45	50/50	47/47	203	46/46	50/50	48/48	204	50/50	60/60	53/52	208
		HIGH	45/45	50/50	47/46	249	49/49	60/60	52/50	253	50/50	60/60	53/52	254	53/53	60/60	57/56	258
	460–3–60	STD	19	20	19	97	20	25	21	99	21	25	22	99	23	25	24	101
		MED	20	25	20	100	21	25	22	102	22	25	23	102	24	25	25	104
		HIGH	21	25	22	125	22	25	24	127	23	25	24	127	25	30	26	129
	575–3–60	STD	14	15	14	79	18	20	19	83	16	20	16	81	19	25	21	85
		MED	15	20	15	83	18	20	19	87	16	20	17	85	20	25	21	89
		HIGH	16	20	16	92	19	25	21	96	17	20	18	94	21	25	23	98
48HC*D09	208/230–3–60	STD	40/40	50/50	42/41	195	44/44	50/50	46/46	199	45/45	50/50	47/47	200	49/49	60/60	52/51	204
		MED	41/41	50/50	43/43	199	45/45	50/50	47/47	203	46/46	50/50	49/48	204	50/50	60/60	53/53	208
		HIGH	45/45	50/50	47/46	249	49/49	60/60	52/51	253	50/50	60/60	53/52	254	54/54	60/60	57/56	258
	460–3–60	STD	19	25	19	97	21	25	22	99	21	25	22	99	23	25	24	101
		MED	20	25	20	100	22	25	23	102	22	25	23	102	24	25	25	104
		HIGH	21	25	22	125	23	25	24	127	23	25	24	127	25	30	26	129
	575–3–60	STD	15	20	16	79	19	20	20	83	17	20	18	81	21	25	22	85
		MED	16	20	16	83	20	25	21	87	18	20	18	85	21	25	23	89
		HIGH	17	20	18	92	21	25	22	96	19	20	20	94	22	25	24	98
48HC*D11	208/230–3–60	STD	51/51	60/60	53/53	254	55/55	60/60	58/57	258	56/56	60/60	59/58	259	59/59	70/70	63/63	263
		MED	54/54	60/60	58/56	304	58/58	70/70	62/61	308	59/59	70/70	63/62	309	63/63	70/70	67/66	313
		HIGH	57/57	70/70	61/60	315	61/61	70/70	65/64	319	62/62	70/70	66/65	320	66/66	80/80	71/70	324
	460–3–60	STD	24	30	25	122	25	30	27	124	26	30	27	124	28	30	29	126
		MED	25	30	26	147	27	30	28	149	27	30	28	149	29	35	30	151
		HIGH	26	30	28	152	28	30	30	154	28	30	30	154	30	35	32	156
	575–3–60	STD	19	20	20	97	23	25	24	101	21	25	22	99	25	30	26	103
		MED	20	25	21	106	24	25	25	110	22	25	23	108	26	30	27	112
		HIGH	22	25	23	120	26	30	27	124	24	25	25	122	28	30	29	126

ELECTRICAL INFORMATION

Table 79 - UNIT WIRE SIZING DATA WITH FACTORY INSTALLED HACR BREAKER AND 2 SPEED INDOOR FAN OPTION (cont)

UNIT	NOM. V–Ph–Hz	IFM TYPE	NO C.O. or UNPWR C.O.								w/ PWRD C.O.							
			NO P.E.				w/ P.E. (pwrd fr/ unit)				NO P.E.				w/ P.E. (pwrd fr/ unit)			
			MCA	HACR BRKR	DISC. SIZE		MCA	HACR BRKR	DISC. SIZE		MCA	HACR BRKR	DISC. SIZE		MCA	HACR BRKR	DISC. SIZE	
					FLA	LRA			FLA	LRA			FLA	LRA			FLA	LRA
48HC*D12	208/230–3–60	STD	50/50	60/60	52/52	279	53/53	60/60	56/56	283	54/54	60/60	57/57	284	58/58	70/70	62/61	288
		MED	53/53	60/60	56/55	329	57/57	70/70	60/59	333	58/58	70/70	62/60	334	62/62	70/70	66/65	338
		HIGH	56/56	60/60	59/58	340	60/60	70/70	64/63	344	61/61	70/70	65/64	345	65/65	80/80	69/68	349
	460–3–60	STD	25	30	26	134	26	30	28	136	27	30	28	136	29	35	30	138
		MED	26	30	27	159	28	30	29	161	28	30	29	161	30	35	32	163
		HIGH	27	30	29	164	29	35	31	166	29	35	31	166	31	35	33	168
	575–3–60	STD	19	25	20	107	23	25	24	111	21	25	22	109	25	30	26	113
		MED	20	25	21	116	24	30	26	120	22	25	23	118	26	30	27	122
		HIGH	22	25	23	130	26	30	27	134	24	25	25	132	28	30	29	136
48HC*D14	208/230–3–60	STD	56/56	70/70	59/58	311	60/60	70/70	63/62	315	61/61	70/70	64/63	316	65/65	80/80	69/68	320
		MED	59/59	70/70	61/60	335	62/62	80/80	66/65	339	63/63	80/80	67/66	340	67/67	80/80	71/70	344
		HIGH	68	80	72	350	72	80	77	354	73	80	78	355	77	90	82	359
	460–3–60	STD	28	35	29	157	30	35	32	159	31	35	32	159	32	40	34	161
		MED	30	35	31	169	31	40	33	171	32	40	33	171	34	40	35	173
		HIGH	35	40	37	176	37	45	39	178	37	45	39	178	39	45	41	180
	575–3–60	STD	24	30	25	128	28	30	29	132	25	30	27	130	29	35	31	134
		MED	24	30	25	128	28	30	29	132	25	30	27	130	29	35	31	134
		HIGH	29	35	30	140	32	40	34	144	30	35	32	142	34	40	36	146

LEGEND:

BRKR	–	Circuit breaker
CO	–	Convenience outlet
DISC	–	Disconnect
FLA	–	Full load amps
IFM	–	Indoor fan motor
LRA	–	Locked rotor amps
MCA	–	Minimum circuit amps
MOCP	–	MAX FUSE or HACR Breaker
PE	–	Power exhaust
PWRD CO	–	Powered convenient outlet
UNPWR CO	–	Unpowered convenient outlet

NOTES:

1. In compliance with NEC requirements for multimotor and combination load equipment (refer to NEC Articles 430 and 440), the overcurrent protective device for the unit shall be fuse or HACR breaker. Canadian units may be fuse or circuit breaker.
2. **Unbalanced 3-Phase Supply Voltage**
   Never operate a motor where a phase imbalance in supply voltage is greater than 2%. Use the following formula to determine the percentage of voltage imbalance.

$$\text{\% Voltage Imbalance} = 100 \times \frac{\text{max voltage deviation from average voltage}}{\text{average voltage}}$$

Example: Supply voltage is 230-3-60

AB = 224 v
BC = 231 v
AC = 226 v

$$\text{Average Voltage} = \frac{(224 + 231 + 226)}{3} = \frac{681}{3}$$
$$= 227$$

Determine maximum deviation from average voltage.
(AB) 227 – 224 = 3 v
(BC) 231 – 227 = 4 v
(AC) 227 – 226 = 1 v
Maximum deviation is 4 v.
Determine percent of voltage imbalance.

$$\text{\% Voltage Imbalance} = 100 \times \frac{4}{227}$$
$$= 1.76\%$$

This amount of phase imbalance is satisfactory as it is below the maximum allowable 2%.
IMPORTANT: If the supply voltage phase imbalance is more than 2%, contact your local electric utility company immediately.

SEQUENCE OF OPERATION

General

The sequence below describes the sequence of operation for an electro-mechanical unit with and without a factory installed EconoMi$er™ IV and X (called "economizer" in this sequence). For information regarding a direct digital controller, see the start-up, operations, and troubleshooting manual for the applicable controller.

Electro-mechanical units with no economizer

Cooling (Single speed indoor fan motor) —

When the thermostat calls for cooling, terminals G and Y1 are energized. As a result, the indoor-fan contactor (IFC) and the compressor contactor (C1) are energized, causing the indoor-an motor (IFM), compressor #1, and outdoor fan to start. If the unit has 2 stages of cooling, the thermostat will additionally energize Y2. The Y2 signal will energize compressor contactor #2 (C2), causing compressor #2 to start. Regardless of the number of stages, the outdoor-fan motor runs continuously while unit is cooling.

Cooling (2-speed indoor fan motor) —

Per ASHRAE 90.1 standard section 6.4.3.10.b, during the first stage of cooling operation the VFD will adjust the fan motor to provide 2/3rd of the total cfm established for the unit. When a call for the second stage of cooling is required, the VFD will allow the total cfm for the unit established (100%).

Heating

NOTE: WeatherMaster (48HC) units have either 1 or 2 stages of gas heat.

When the thermostat calls for heating, power is sent to W on the Integrated Gas Controller (IGC) board. An LED (light-emitting diode) on the IGC board turns on and remains on during normal operation. A check is made to ensure that the rollout switch and limit switch are closed. If the check was successful, the induced-draft motor is energized, and when its speed is satisfactory, as proven by the "hall effect" sensor, the ignition activation period begins. The burners will ignite within 5 seconds. If the burners do not light, there is a 22-second delay before another 5-second attempt. This sequence is repeated for 15 minutes or until the burners light. If, after the 15 minutes, the burners still have not lit, heating is locked out. To reset the control, break 24-v power to the thermostat.

When ignition occurs, the IGC board will continue to monitor the condition of the rollout switch, the limit switches, the "hall effect" sensor, as well as the flame sensor. 45 seconds after ignition occurs, assuming the unit is controlled through a room thermostat set for fan auto, the indoor-fan motor will energize (and the outdoor-air dampers will open to their minimum position). If, for some reason, the over-temperature limit opens prior to the start of the indoor fan blower, the unit will shorten the 45-second delay to 5 seconds less than the time from initiation of heat to when the limit tripped. Gas will not be interrupted to the burners and heating will continue. Once the fan-on delay has been modified, it will not change back to 45 seconds until power is reset to the control.

On units with 2 stages of heat, when additional heat is required, W2 closes and initiates power to the second stage of the main gas valve. When the thermostat is satisfied, W1 and W2 open and the gas valve closes, interrupting the flow of gas to the main burners.

If the call for W1 lasted less than 1 minute, the heating cycle will not terminate until 1 minute after W1 became active. If the unit is controlled through a room thermostat set for fan auto, the indoor-fan motor will continue to operate for an additional 45 seconds then stop. If the over-temperature limit opens after the indoor motor is stopped, but within 10 minutes of W1 becoming inactive, on the next cycle the time will be extended by 15 seconds. The maximum delay is 3 minutes. Once modified, the fan off delay will not change back to 45 seconds unless power is reset to the control. A LED indicator is provided on the IGC to monitor operation.

Electro-mechanical units with an economizer

Cooling —

When free cooling is not available, the compressors will be controlled by the zone thermostat. When free cooling is available, the outdoor-air damper is modulated by the EconoMi$er IV and X control to provide a 50°F (10°C) to 55°F (13°C) mixed-air temperature into the zone. As the mixed air temperature fluctuates above 55°F (13°C)or below 50°F (10°C) dampers will be modulated (open or close) to bring the mixed-air temperature back within control. If mechanical cooling is utilized with free cooling, the outdoor-air damper will maintain its current position at the time the compressor is started. If the increase in cooling capacity causes the mixed-air temperature to drop below 45°F (7°C), then the outdoor-air damper position will be decreased to the minimum position. If the mixed-air temperature continues to fall, the outdoor-air damper will close. Control returns to normal once the mixed-air temperature rises above 48°F (9°C). The power exhaust fans will be energized and de-energized, if installed, as the outdoor-air damper opens and closes.

If field-installed accessory CO_2 sensors are connected to the EconoMi$er IV and X control, a demand controlled ventilation strategy will begin to operate. As the CO_2 level in the zone increases above the CO_2 setpoint, the minimum position of the damper will be increased proportionally. As the CO_2 level decreases because of the increase in fresh air, the outdoor-air damper will be proportionally closed. For EconoMi$er IV and X operation, there must be a thermostat call for the fan (G). If the unit is occupied and the fan is on, the damper will operate at minimum position. Otherwise, the damper will be closed.

When the EconoMi$er IV and X control is in the occupied mode and a call for cooling exists (Y1 on the thermostat), the control will first check for indoor fan operation. If the fan is not on, then cooling will not be activated. If the fan is on, then the control will open the EconoMi$er IV and X damper to the minimum position.

On the initial power to the EconoMi$er IV and X control, it will take the damper up to 2 1/2 minutes before it begins to position itself. After the initial power-up, further changes in damper position can take up to 30 seconds to initiate. Damper movement from full closed to full open (or vice versa) will take between 1 1/2 and 2 1/2 minutes. If free cooling can be used as determined from the appropriate changeover command (switch, dry bulb, enthalpy curve, differential dry bulb, or differential enthalpy), then the control will modulate the dampers open to maintain the mixed-air temperature setpoint at 50°F (10°C) to 55°F (13°C). If there is a further demand for cooling (cooling second stage - Y2 is energized), then the control will bring on compressor stage 1 to maintain the mixed-air temperature setpoint. The EconoMi$er IV and X damper will be open at maximum position. EconoMi$er IV and X operation is limited to a single compressor.

2-Speed Note: When operating in ventilation mode only, the indoor fan motor will automatically adjust to 2/3rd of the total cfm established.

Heating

The sequence of operation for the heating is the same as an electromechanical unit with no economizer. The only difference is how the economizer acts. The economizer will stay at the Economizer Minimum Position while the evaporator fan is operating. The outdoor-air damper is closed when the indoor fan is not operating.

Optional Humidi-MiZer Dehumidification System

Units with the factory equipped Humidi-MiZer option are capable of providing multiple modes of improved dehumidification as a variation of the normal cooling cycle. The Humidi-MiZer option includes additional valves in the liquid line and discharge line of each refrigerant circuit, a small reheat condenser coil downstream of the evaporator, and Motormaster variable-speed control of some or all outdoor fans. Operation of the revised refrigerant circuit for each mode is described below.

The Humidi-MiZer system provides three sub-modes of operation: Cool, Reheat1, and Reheat2.

Cool mode - provides a normal ratio of Sensible and Latent Cooling effect from the evaporator coil.

Reheat1 - provides increased Latent Cooling while slightly reducing the Sensible Cooling effect.

Reheat2 - provides normal Latent Cooling but with null or minimum Sensible Cooling effect delivered to the space.

The Reheat1 and Reheat2 modes are available when the unit is not in a Heating mode and when the Low Ambient Lockout switch is closed.

The following diagrams depict piping for Single Stage cooling units.

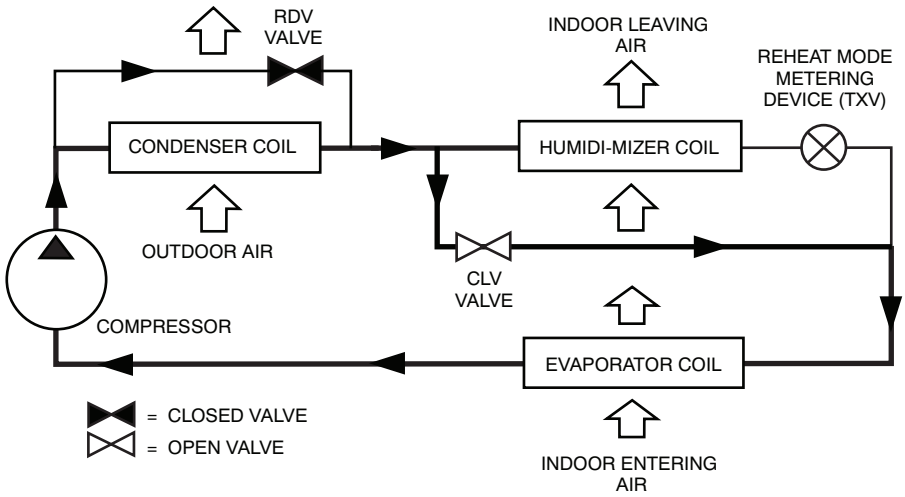

C12702

Normal Cooling Mode - Humidi-MiZer System with Single Stage Cooling

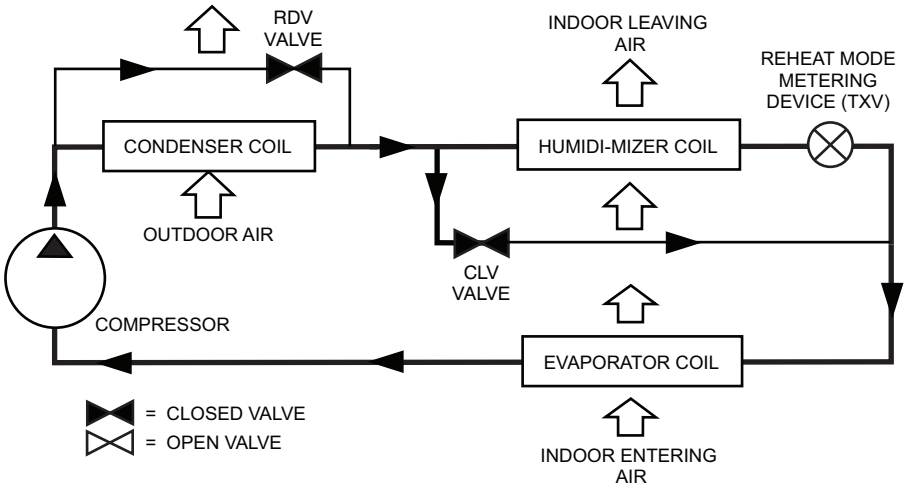

C12703

Subcooling Mode (Reheat 1) - Humidi-MiZer System with Single Stage Cooling

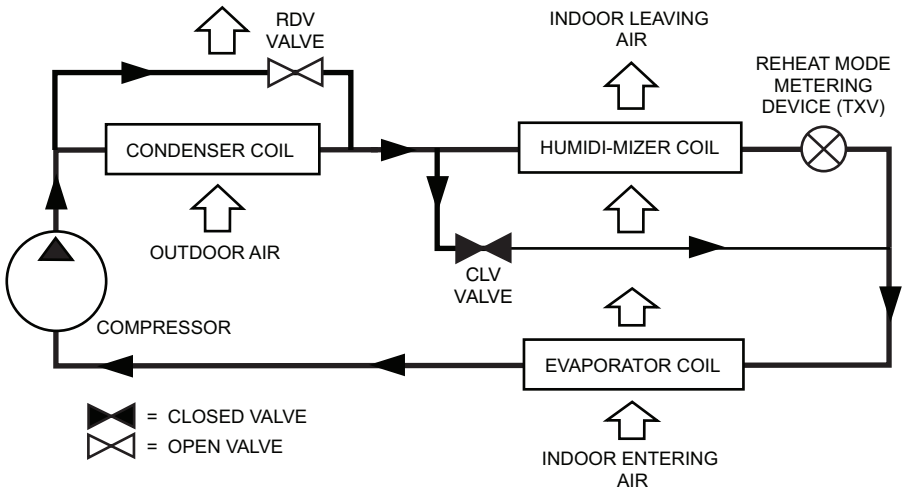

C12704

Hot Gas Reheat Mode (Reheat2) - Humidi-MiZer System with Single Stage Cooling

GUIDE SPECIFICATIONS - 48HC**04-14

Note about this specification:

This specification is in the “Masterformat” as published by the Construction Specification Institute. Please feel free to copy this specification directly into your building spec.

Gas Heat/Electric Cooling Packaged Rooftop

HVAC Guide Specifications

Size Range: **3 to 12.5 Nominal Tons**

Section **Description**

23 06 80 Schedules for Decentralized HVAC Equipment

23 06 80.13 Decentralized Unitary HVAC Equipment Schedule

23 06 80.13.A. Rooftop unit schedule

1. Schedule is per the project specification requirements.

23 07 16 HVAC Equipment Insulation

23 07 16.13 Decentralized, Rooftop Units:

23 07 16.13.A. Evaporator fan compartment:

1. Interior cabinet surfaces shall be insulated with a minimum 1/2-in. thick, minimum 1 1/2 lb density, flexible fiberglass insulation bonded with a phenolic binder, neoprene coated on the air side.
2. Insulation and adhesive shall meet NFPA 90A requirements for flame spread and smoke generation.

23 07 16.13.B. Gas heat compartment:

1. Aluminum foil-faced fiberglass insulation shall be used.
2. Insulation and adhesive shall meet NFPA 90A requirements for flame spread and smoke generation.

23 09 13 Instrumentation and Control Devices for HVAC

23 09 13.23 Sensors and Transmitters

23 09 13.23.A. Thermostats

1. Thermostat must
   a. energize both “W” and “G” when calling for heat.
   b. have capability to energize 2 different stages of cooling, and 2 different stages of heating.
   c. include capability for occupancy scheduling.

23 09 23 Direct-digital Control system for HVAC

23 09 23.13 Decentralized, Rooftop Units:

23 09 23.13.A. PremierLink controller

1. Shall be ASHRAE 62-2001 compliant.
2. Shall accept 18-32 VAC input power.
3. Shall have an operating temperature range from -40°F (-40°C) to 158°F (70°C), 10% - 95% RH (non-condensing).
4. Shall include an integrated economizer controller to support an economizer with 4 to 20 mA actuator input and no microprocessor controller.
5. Controller shall accept the following inputs: space temperature, setpoint adjustment, outdoor air temperature, indoor air quality, outdoor air quality, indoor relative humidity, compressor lock-out, fire shutdown, enthalpy, fan status, remote time clock/door switch.
6. Shall accept a CO_2 sensor in the conditioned space, and be Demand Control Ventilation (DCV) ready.
7. Shall provide the following outputs: economizer, fan, cooling stage 1, cooling stage 2, heat stage 1, heat stage 2, heat stage 3/ exhaust/ reversing valve/ dehumidify/ occupied.
8. Unit shall provide surge protection for the controller through a circuit breaker.
9. Shall be Internet capable, and communicate at a Baud rate of 38.4K or faster.

10. Shall have an LED display independently showing the status of activity on the communication bus, and processor operation.
11. Shall include an EIA-485 protocol communication port, an access port for connection of either a computer or a Carrier technician tool, an EIA-485 port for network communication to intelligent space sensors and displays, and a port to connect an optional LonWorks plug-in communications card.
12. Shall have built-in Carrier Comfort Network™ (CCN) protocol, and be compatible with other CCN devices, including ComfortLink™ and ComfortVIEW™ controllers.
13. Shall have built-in support for Carrier technician tool.
14. Software upgrades will be accomplished by local download. Software upgrades through chip replacements are not allowed.
15. Shall be shock resistant in all planes to 5G peak, 11ms during operation, and 100G peak, 11ms during storage.
16. Shall be vibration resistant in all planes to 1.5G @ 20-300 Hz.
17. Shall support a bus length of 4000 ft (1219m) max, 60 devices per 1000 ft (305m) section, and 1 RS-485 repeater per 1000 ft (305m) sections.

23 09 23.13.B. ComfortLink Unit Controls shall contain:

1. Four button detailed English scrolling marquee display.
2. CCN (Carrier Comfort Network) capable.
3. Unit control with standard suction pressure transducers and condensing temperature thermistors.
4. Shall provide a 5°F temperature difference between cooling and heating set points to meet ASHRAE 90.1 Energy Standard.
5. Shall provide and display a current alarm list and an alarm history list.
6. Service run test capability.
7. Shall accept input from a CO_2 sensor (both indoor and outdoor).
8. Configurable alarm light shall be provided which activates when certain types of alarms occur.
9. Compressor minimum run time (3 minutes) and minimum off time (5 minutes) are provided.
10. Service diagnostic mode.
11. Economizer control (optional).
12. Control multi capacity stages
13. Unit shall be complete with self-contained low voltage control circuit.
14. Unit shall have 0°F low ambient cooling operation.

23 09 23.13.C. RTU Open - multi-protocol, direct digital controller:

1. Shall be ASHRAE 62-2001 compliant.
2. Shall accept 18-30VAC, 50-60Hz, and consumer 15VA or less power.
3. Shall have an operating temperature range from -40°F (-40°C) to 130°F (54°C), 10% - 90% RH (non-condensing).
4. Shall include built-in protocol for BACNET (MS/TP and PTP modes), Modbus (RTU and ASCII), Johnson N2 and LonWorks. LonWorks Echelon processor required for all Lon applications shall be contained in separate communication board.
5. Shall allow access of up to 62 network variables (SNVT). Shall be compatible with all open controllers
6. Baud rate Controller shall be selectable using a dipswitch.
7. Shall have an LED display independently showing the status of serial communication, running, errors, power, all digital outputs, and all analog inputs.
8. Shall accept the following inputs: space temperature, setpoint adjustment, outdoor air temperature, indoor air quality, outdoor air quality, compressor lock-out, fire shutdown, enthalpy switch, and fan status/filter status/ humidity/ remote occupancy.
9. Shall provide the following outputs: economizer, fan, cooling stage 1, cooling stage 2, heat stage 1, heat stage 2, heat stage 3/ exhaust/ reversing valve.
10. Shall have built-in surge protection circuitry through solid state polyswitches. Polyswitches shall be used on incoming power and network connections. Polyswitches will return to normal when the “trip” condition clears.
11. Shall have a battery back-up capable of a minimum of 10,000 hours of data and time clock retention during power outages.
12. Shall have built-in support for Carrier technician tool.
13. Shall include an EIA-485 protocol communication port, an access port for connection of either a computer or a Carrier technician tool, an EIA-485 port for network communication to intelligent space sensors and displays, and a port to connect an optional LonWorks communications card.

14. Software upgrades will be accomplished by either local or remote download. No software upgrades through chip replacements are allowed.

23 09 33 Electric and Electronic Control System for HVAC

23 09 33.13 Decentralized, Rooftop Units:

23 09 33.13.A. General:

1. Shall be complete with self-contained low-voltage control circuit protected by a resettable circuit breaker on the 24-v transformer side. Transformer shall have 75VA capability.
2. Shall utilize color-coded wiring.
3. Shall include a central control terminal board to conveniently and safely provide connection points for vital control functions such as: smoke detectors, phase monitor, gas controller, economizer, thermostat, DDC control options, and low and high pressure switches.
4. The heat exchanger shall be controlled by an integrated gas controller (IGC) microprocessor. See heat exchanger section of this specification.
5. Unit shall include a minimum of one 8-pin screw terminal connection board for connection of control wiring.

23 09 33.23.B. Safeties:

1. Compressor over-temperature, over-current. High internal pressure differential.
2. Low-pressure switch.
   a. Units with 2 compressors shall have different sized connectors for the circuit 1 and circuit 2 low and high pressure switches. They shall physically prevent the cross-wiring of the safety switches between circuits 1 and 2.
   b. Low pressure switch shall use different color wire than the high pressure switch. The purpose is to assist the installer and service technician to correctly wire and or troubleshoot the rooftop unit.
3. High-pressure switch.
   a. Units with 2 compressors shall have different sized connectors for the circuit 1 and circuit 2 low and high pressure switches. They shall physically prevent the cross-wiring of the safety switches between circuits 1 and 2.
   b. High pressure switch shall use different color wire than the low pressure switch. The purpose is to assist the installer and service technician to correctly wire and or troubleshoot the rooftop unit.
4. Automatic reset, motor thermal overload protector.
5. Heating section shall be provided with the following minimum protections:
   a. High-temperature limit switches.
   b. Induced draft motor speed sensor.
   c. Flame rollout switch.
   d. Flame proving controls.

23 09 93 Sequence of Operations for HVAC Controls

23 09 93.13 Decentralized, Rooftop Units:

23 09 93.13 INSERT SEQUENCE OF OPERATION

23 40 13 Panel Air Filters

23 40 13.13 Decentralized, Rooftop Units:

23 40 13.13.A. Standard filter section

1. Shall consist of factory-installed, low velocity, disposable 2-in. thick fiberglass filters of commercially available sizes.
2. Unit shall use only one filter size. Multiple sizes are not acceptable.
3. Filters shall be accessible through an access panel with “no-tool” removal as described in the unit cabinet section of this specification (23 81 19.13.H).

23 81 19 Self-Contained Air Conditioners

23 81 19.13 Small-Capacity Self-Contained Air Conditioners (48HC**04-14)

23 81 19.13.A. General

1. Outdoor, rooftop mounted, electrically controlled, heating and cooling unit utilizing a fully hermetic scroll compressor(s) for cooling duty and gas combustion for heating duty.
2. Factory assembled, single-piece heating and cooling rooftop unit. Contained within the unit enclosure shall be all factory wiring, piping, controls, and special features required prior to field start-up.
3. Unit shall use Puron® refrigerant.
4. Unit shall be installed in accordance with the manufacturer’s instructions.

5. Unit must be selected and installed in compliance with local, state, and federal codes.

23 81 19.13.B. Quality Assurance

1. Unit meets ASHRAE 90.1 minimum efficiency requirements.
2. 3-phase units are Energy Star certified.
3. Unit shall be rated in accordance with AHRI Standards 210/240 and 340/360.
4. Unit shall be designed to conform to ASHRAE 15, 2001.
5. Unit shall be UL-tested and certified in accordance with ANSI Z21.47 Standards and UL or ETL-listed and certified under Canadian standards as a total package for safety requirements.
6. Insulation and adhesive shall meet NFPA 90A requirements for flame spread and smoke generation.
7. Unit casing shall be capable of withstanding 500-hour salt spray exposure per ASTM B117 (scribed specimen).
8. Unit shall be designed in accordance with ISO 9001, and shall be manufactured in a facility registered by ISO 9001.
9. Roof curb shall be designed to conform to NRCA Standards.
10. Unit shall be subjected to a completely automated run test on the assembly line. The data for each unit will be stored at the factory, and must be available upon request.
11. Unit shall be designed in accordance with UL Standard 1995, including tested to withstand rain.
12. Unit shall be constructed to prevent intrusion of snow and tested to prevent snow intrusion into the control box up to 40 mph.
13. Unit shake tested to assurance level 1, ASTM D4169 to ensure shipping reliability.
14. High Efficient Motors listed shall meet section 313 of the Energy Independence and Security Act of 2007 (EISA 2007).

23 81 19.13.C. Delivery, Storage, and Handling

1. Unit shall be stored and handled per manufacturer's recommendations.
2. Lifted by crane requires either shipping top panel or spreader bars.
3. Unit shall only be stored or positioned in the upright position.

23 81 19.13.E. Project Conditions

1. As specified in the contract.

23 81 19.13.F. Operating Characteristics

1. Unit shall be capable of starting and running at 125°F (52°C) ambient outdoor temperature, meeting maximum load criteria of AHRI Standard 210/240 or 340/360 at ± 10% voltage.
2. Compressor with standard controls shall be capable of operation down to 35°F (2°C), ambient outdoor temperatures. Accessory low ambient kits shall be available if operation below 35°F (2°C), is required. See below for head pressure control package or winter start kit.
3. Unit shall discharge supply air vertically or horizontally as shown on contract drawings.
4. Unit shall be factory configured for vertical supply & return configurations.
5. Unit shall be field convertible from vertical to horizontal airflow on all models. No special kit required on 04-12 models. Supply duct kit required for 14 size model only.
6. Unit shall be capable of mixed operation: vertical supply with horizontal return or horizontal supply with vertical return.

23 81 19.13.G. Electrical Requirements

1. Main power supply voltage, phase, and frequency must match those required by the manufacturer.

23 81 19.13.H. Unit Cabinet

1. Unit cabinet shall be constructed of galvanized steel, and shall be bonderized and coated with a pre-painted baked enamel finish on all externally exposed surfaces.
2. Unit cabinet exterior paint shall be: film thickness, (dry) 0.003 inches minimum, gloss (per ASTM D523, 60°F / 16°C): 60, Hardness: H-2H Pencil hardness.
3. Evaporator fan compartment interior cabinet insulation shall conform to AHRI Standards 210/240 or 340/360 minimum exterior sweat criteria. Interior surfaces shall be insulated with a minimum 1/2-in. thick, 1 lb density, flexible fiberglass insulation, neoprene coated on the air side. Aluminum foil-faced fiberglass insulation shall be used in the gas heat compartment.
4. Base of unit shall have a minimum of four locations for thru-the-base gas and electrical connections (factory installed or field installed), standard.
5. Base Rail
   a. Unit shall have base rails on a minimum of 3 sides.

b. Holes shall be provided in the base rails for rigging shackles to facilitate maneuvering and overhead rigging.
c. Holes shall be provided in the base rail for moving the rooftop by fork truck.
d. Base rail shall be a minimum of 16 gauge thickness.

6. Condensate pan and connections:
   a. Shall be an internally sloped condensate drain pan made of a non-corrosive material.
   b. Shall comply with ASHRAE Standard 62.
   c. Shall use a 3/4" -14 NPT drain connection, possible either through the bottom or side of the drain pan. Connection shall be made per manufacturer's recommendations.
7. Top panel:
   a. Shall be a single piece top panel on 04 thru 12 sizes, two piece on 14 size.
8. Gas Connections:
   a. All gas piping connecting to unit gas valve shall enter the unit cabinet at a single location on side of unit (horizontal plane).
   b. Thru-the-base capability
      (1.) Standard unit shall have a thru-the-base gas-line location using a raised, embossed portion of the unit basepan.
      (2.) Optional, factory-approved, water-tight connection method must be used for thru-the-base gas connections.
      (3.) No basepan penetration, other than those authorized by the manufacturer, is permitted.
9. Electrical Connections
   a. All unit power wiring shall enter unit cabinet at a single, factory-prepared, knockout location.
   b. Thru-the-base capability.
      (1.) Standard unit shall have a thru-the-base electrical location (s) using a raised, embossed portion of the unit basepan.
      (2.) Optional, factory-approved, water-tight connection method must be used for thru-the-base electrical connections.
      (3.) No basepan penetration, other than those authorized by the manufacturer, is permitted.
10. Component access panels (standard)
   a. Cabinet panels shall be easily removable for servicing.
   b. Unit shall have one factory installed, tool-less, removable, filter access panel.
   c. Panels covering control box, indoor fan, indoor fan motor, gas components (where applicable), and compressors shall have a molded composite handles.
   d. Handles shall be UV modified, composite. They shall be permanently attached, and recessed into the panel.
   e. Screws on the vertical portion of all removable access panel shall engage into heat resistant, molded composite collars.
   f. Collars shall be removable and easily replaceable using manufacturer recommended parts.

23 81 19.13.I. Gas Heat

1. General
   a. Heat exchanger shall be an induced draft design. Positive pressure heat exchanger designs shall not be allowed.
   b. Shall incorporate a direct-spark ignition system and redundant main gas valve.
   c. Gas supply pressure at the inlet to the rooftop unit gas valve must match that required by the manufacturer.
2. The heat exchanger shall be controlled by an integrated gas controller (IGC) microprocessor.
   a. IGC board shall notify users of fault using an LED (light-emitting diode).
   b. The LED shall be visible without removing the control box access panel.
   c. IGC board shall contain algorithms that modify evaporator-fan operation to prevent future cycling on high temperature limit switch.
   d. Unit shall be equipped with anti-cycle protection with one short cycle on unit flame rollout switch or 4 continuous short cycles on the high temperature limit switch. Fault indication shall be made using an LED.
3. Standard Heat Exchanger construction
   a. Heat exchanger shall be of the tubular-section type constructed of a minimum of 20-gauge steel coated with a nominal 1.2 mil aluminum-silicone alloy for corrosion resistance.
   b. Burners shall be of the in-shot type constructed of aluminum-coated steel.

c. Burners shall incorporate orifices for rated heat output up to 2000 ft (610m) elevation. Additional accessory kits may be required for applications above 2000 ft (610m) elevation, depending on local gas supply conditions.
d. Each heat exchanger tube shall contain multiple dimples for increased heating effectiveness.

4. Optional Stainless Steel Heat Exchanger construction
   a. Use energy saving, direct-spark ignition system.
   b. Use a redundant main gas valve.
   c. Burners shall be of the in-shot type constructed of aluminum-coated steel.
   d. All gas piping shall enter the unit cabinet at a single location on side of unit (horizontal plane).
   e. The optional stainless steel heat exchanger shall be of the tubular-section type, constructed of a minimum of 20-gauge type 409 stainless steel.
   f. Type 409 stainless steel shall be used in heat exchanger tubes and vestibule plate.
   g. Complete stainless steel heat exchanger allows for greater application flexibility.
5. Optional Low NO_x Heat Exchanger construction
   a. Low NO_x reduction shall be provided to reduce nitrous oxide emissions to meet California's Air Quality Management District (SCAQMD) low-NO_x emissions requirement of 40 nanograms per joule or less.
   b. Primary tubes and vestibule plates on low NO_x units shall be 409 stainless steel. Other components shall be aluminized steel.
6. Induced draft combustion motor and blower
   a. Shall be a direct-drive, single inlet, forward-curved centrifugal type.
   b. Shall be made from steel with a corrosion-resistant finish.
   c. Shall have permanently lubricated sealed bearings.
   d. Shall have inherent thermal overload protection.
   e. Shall have an automatic reset feature.

23 81 19.13.J. Coils

1. Standard Aluminum Fin/Copper Tube Coils:
   a. Standard evaporator and condenser coils shall have aluminum lanced plate fins mechanically bonded to seamless internally grooved copper tubes with all joints brazed.
   b. Evaporator coils shall be leak tested to 150 psig, pressure tested to 450 psig, and qualified to UL 1995 burst test at 1775 psig.
   c. Condenser coils shall be leak tested to 150 psig, pressure tested to 650 psig, and qualified to UL 1995 burst test at 1980 psig.
2. Optional Pre-coated aluminum-fin condenser coils (3-phase models only):
   a. Shall have a durable epoxy-phenolic coating to provide protection in mildly corrosive coastal environments.
   b. Coating shall be applied to the aluminum fin stock prior to the fin stamping process to create an inert barrier between the aluminum fin and copper tube.
   c. Epoxy-phenolic barrier shall minimize galvanic action between dissimilar metals.
3. Optional Copper-fin evaporator and condenser coils(3-phase models only) :
   a. Shall be constructed of copper fins mechanically bonded to copper tubes and copper tube sheets.
   b. Galvanized steel tube sheets shall not be acceptable.
   c. A polymer strip shall prevent coil assembly from contacting the sheet metal coil pan to minimize potential for galvanic corrosion between coil and pan.
4. Optional E-coated aluminum-fin evaporator and condenser coils (3-phase models only):
   a. Shall have a flexible epoxy polymer coating uniformly applied to all coil surface areas without material bridging between fins.
   b. Coating process shall ensure complete coil encapsulation of tubes, fins and headers.
   c. Color shall be high gloss black with gloss per ASTM D523-89.
   d. Uniform dry film thickness from 0.8 to 1.2 mil on all surface areas including fin edges.
   e. Superior hardness characteristics of 2H per ASTM D3363-92A and cross-hatch adhesion of 4B-5B per ASTM D3359-93.
   f. Impact resistance shall be up to 160 in.-lb (ASTM D2794-93).
   g. Humidity and water immersion resistance shall be up to minimum 1000 and 250 hours respectively (ASTM D2247-92 and ASTM D870-92).

h. Corrosion durability shall be confirmed through testing to be no less than 1000 hours salt spray per ASTM B117-90.

5. Optional E-coated aluminum-fin, aluminum tube condenser coils:
   a. Shall have a flexible epoxy polymer coating uniformly applied to all coil external surface areas without material bridging between fins or louvers.
   b. Coating process shall ensure complete coil encapsulation, including all exposed fin edges.
   c. E-coat thickness of 0.8 to 1.2 mil with top coat having a uniform dry film thickness from 1.0 to 2.0 mil on all external coil surface areas, including fin edges, shall be provided.
   d. Shall have superior hardness characteristics of 2H per ASTM D3363-00 and cross-hatch adhesion of 4B-5B per ASTM D3359-02.
   e. Shall have superior impact resistance with no cracking, chipping or peeling per NSF/ANSI 51-2002 Method 10.2.

23 81 19.13.K. Refrigerant Components

1. Refrigerant circuit shall include the following control, safety, and maintenance features:
   a. Thermostatic Expansion Valve (TXV) shall help provide optimum performance across the entire operating range. Shall contain removable power element to allow change out of power element and bulb without removing the valve body.
   b. Refrigerant filter drier - Solid core design.
   c. Service gauge connections on suction and discharge lines.
   d. Pressure gauge access through a specially designed access port in the top panel of the unit.
2. There shall be gauge line access port in the skin of the rooftop, covered by a black, removable plug.
   a. The plug shall be easy to remove and replace.
   b. When the plug is removed, the gauge access port shall enable maintenance personnel to route their pressure gauge lines.
   c. This gauge access port shall facilitate correct and accurate condenser pressure readings by enabling the reading with the compressor access panel on.
   d. The plug shall be made of a leak proof, UV-resistant, composite material.
3. Compressors
   a. Unit shall use fully hermetic, scroll compressor for each independent refrigeration circuit.
   b. Models shall be available with single compressor/single stage cooling designs on 04 – 07 sizes models, and 2 compressor/2-stage cooling models on 08 – 14 sizes.
   c. Compressor motors shall be cooled by refrigerant gas passing through motor windings.
   d. Compressors shall be internally protected from high discharge temperature conditions.
   e. Compressors shall be protected from an over-temperature and over-amperage conditions by an internal, motor overload device.
   f. Compressor shall be factory mounted on rubber grommets.
   g. Compressor motors shall have internal line break thermal, current overload and high pressure differential protection.
   h. Crankcase heaters shall not be required for normal operating range, unless provided by the factory.

23 81 19.13.L. Filter Section

1. Filters access is specified in the unit cabinet section of this specification.
2. Filters shall be held in place by a pivoting filter tray, facilitating easy removal and installation.
3. Shall consist of factory-installed, low velocity, throw-away 2-in. thick fiberglass filters.
4. Filters shall be standard, commercially available sizes.
5. Only one size filter per unit is allowed.

23 81 19.13.M. Evaporator Fan and Motor

1. Evaporator fan motor:
   a. Shall have permanently lubricated bearings.
   b. Shall have inherent automatic-reset thermal overload protection or circuit breaker.
   c. Shall have a maximum continuous bhp rating for continuous duty operation; no safety factors above that rating shall be required.
2. Electric Drive (Direct Drive) X13 – 5 Speed/Torque Evaporator Fan:
   a. Multi-speed motor with easy quick adjustment settings.
   b. Blower fan shall be double-inlet type with forward-curved blades.
   c. Shall be constructed from steel with a corrosion resistant finish and dynamically balanced.

d. Standard on all 04-06 models with 208/230/1/60 operation without Humidi-MiZer
e. Standard on all 04-06 3-phase models without Humidi-MiZer, with optional belt drive.

3. Belt-driven Evaporator Fan:
   a. Belt drive shall include an adjustable-pitch motor pulley.
   b. Shall use sealed, permanently lubricated ball-bearing type.
   c. Blower fan shall be double-inlet type with forward-curved blades.
   d. Shall be constructed from steel with a corrosion resistant finish and dynamically balanced.
   e. Standard on all 07-14 size and 04-06 with Humidi-MiZer models. Optional on all 04-06 3-phase models.

23 81 19.13.N. Condenser Fans and Motors

1. Condenser fan motors:
   a. Shall be a totally enclosed motor.
   b. Shall use permanently lubricated bearings.
   c. Shall have inherent thermal overload protection with an automatic reset feature.
   d. Shall use a shaft-down design on 04 to 12 models and shaft-up on 14 size with rain shield.
2. Condenser Fans:
   a. Shall be a direct-driven propeller type fan.
   b. Shall have galvalum blades riveted to corrosion-resistant steel spiders and shall be dynamically balanced.

23 81 19.13.O. Special Features Options and Accessories

1. Staged Air Volume System (SAV) for 2-stage cooling models only:
   a. Evaporator fan motor:
      (1.) Shall have permanently lubricated bearings.
      (2.) Shall have a maximum continuous bhp rating for continuous duty operation; no safety factors above that rating.
      (3.) Shall be Variable Frequency duty and 2-speed control.
      (4.) Shall contain motor shaft grounding ring to prevent electrical bearing fluting damage by safely diverting harmful shaft voltages and bearing currents to ground.
2. Variable Frequency Drive (VFD). Only available on 2-speed indoor fan motor option (SAV):
   a. Shall be installed inside the unit cabinet, mounted, wired and tested.
   b. Shall contain Electromagnetic Interference (EMI) frequency protection.
   c. Insulated Gate Bi-Polar Transistors (IGBT) used to produce the output pulse width modulated (PWM) waveform, allowing for quiet motor operation.
   d. Self diagnostics with fault and power code LED indicator. Field accessory Display Kit available for further diagnostics and special setup applications.
   e. RS485 capability standard.
   f. Electronic thermal overload protection.
   g. 5% swinging chokes for harmonic reduction and improved power factor.
   h. All printed circuit boards shall be conformal coated.
3. Integrated EconoMi$er IV, EconoMi$er2, and EconoMi$er X standard leak rate models. (Factory installed on 3 phase models only. Field installed on all 3 and 1 phase models)
   a. Integrated, gear driven opposing modulating blade design type capable of simultaneous economizer and compressor operation.
   b. Independent modules for vertical or horizontal return configuration shall be available. Vertical return modules shall be available as a factory installed option.
   c. Damper blades shall be galvanized steel with composite gears. Plastic or composite blades on intake or return shall not be acceptable.
   d. Shall include all hardware and controls to provide free cooling with outdoor air when temperature and/or humidity are below setpoints.
   e. Shall be equipped with gear driven dampers for both the outdoor ventilation air and the return air for positive air stream control.
   f. Standard leak rate shall be equipped with dampers not to exceed 2% leakage at 1 in. wg pressure differential.
   g. Economizer controller on EconoMi$er IV models shall be the Honeywell W7212 that provides:
      (1.) Combined minimum and DCV maximum damper position potentiometers with compressor staging relay.
      (2.) Functions with solid state analog enthalpy or dry bulb changeover control sensing.

(3.) Contain LED indicates for: when free cooling is available, when module is in DCV mode, when exhaust fan contact is closed.

h. Economizer controller on EconoMi$er X models shall be the Honeywell W7220 that provides:

(1.) 2-line LCD interface screen for setup, configuration and troubleshooting

(2.) On-board Fault Detection and Diagnostics (FDD) that senses and alerts when the economizer is not operating properly, per California Title 24.

(3.) Sensor failure loss of communication identification

(4.) Automatic sensor detection

(5.) Capabilities for use with multiple-speed indoor fan systems

(6.) Utilize digital sensors: Dry bulb and Enthalpy

i. Economizer controller on EconoMi$er 2 models with PremierLink shall be 4-20mA design and controlled by the PremierLink controller. PremierLink does not comply with California Title 24 Fault Detection & Diagnostic (FDD) requirements.

j. Economizer controller on EconoMi$er 2 models with RTU Open models shall be a 4-20mA design controlled directly by the RTU Open controller. RTU Open meets California Title 24 Fault Detection & Diagnostic (FDD) requirements.

k. Economizer controller on EconoMi$er 2 models with ComfortLink models shall be controlled directly by the ComfortLink controller. ComfortLink meets California Title 24 Fault Detection & Diagnostic (FDD) requirements.

l. Shall be capable of introducing up to 100% outdoor air.

m. Shall be equipped with a barometric relief damper capable of relieving up to 100% return air and contain seals that meet ASHRAE 90.1 requirements.

n. Shall be designed to close damper(s) during loss-of-power situations with spring return built into motor.

o. Dry bulb outdoor air temperature sensor shall be provided as standard. Enthalpy sensor is also available on factory installed only. Outdoor air sensor setpoint shall be adjustable and shall range from 40 to 100° F / 4 to 38° C. Additional sensor options shall be available as accessories.

p. The economizer controller shall also provide control of an accessory power exhaust unit function. Factory set at 100%, with a range of 0% to 100%.

q. The economizer shall maintain minimum airflow into the building during occupied period and provide design ventilation rate for full occupancy.

r. Dampers shall be completely closed when the unit is in the unoccupied mode.

s. Economizer controller shall accept a 2-10 Vdc CO2 sensor input for IAQ/DCV control. In this mode, dampers shall modulate the outdoor air damper to provide ventilation based on the sensor input.

t. Compressor lockout temperature on W7220 is adjustable from -45° F to 80° F, set at a factory default of 32° F. Others shall open at 35° F (2C) and closes at 50° F (10° C)

u. Actuator shall be direct coupled to economizer gear. No linkage arms or control rods shall be acceptable.

v. Economizer controller shall provide indications when in free cooling mode, in the DCV mode, or the exhaust fan contact is closed.

4. Integrated EconoMi$er 2, and EconoMi$er X Ultra Low Leak rate models. (Factory installed on 3 phase models only. Field installed on all 3 and 1 phase models)

a. Integrated, gear driven opposing modulating blade design type capable of simultaneous economizer and compressor operation.

b. Independent modules for vertical or horizontal return configuration shall be available. Vertical return modules shall be available as a factory installed option.

c. Damper blades shall be galvanized steel with composite gears. Plastic or composite blades on intake or return shall not be acceptable.

d. Shall include all hardware and controls to provide free cooling with outdoor air when temperature and/or humidity are below setpoints.

e. Shall be equipped with gear driven dampers for both the outdoor ventilation air and the return air for positive air stream control.

f. Ultra Low Leak design meets California Title 24 section 140.4 and ASHRAE 90.1 requirements of 4 cfm per sq. ft. on the outside air dampers and 10 cfm per sq. ft. on the return dampers.

g. Economizer controller on EconoMi$er X models shall be the Honeywell W7220 that provides:

(1.) 2-line LCD interface screen for setup, configuration and troubleshooting

(2.) On-board Fault Detection and Diagnostics (FDD) that senses and alerts when the economizer is not operating properly, per California Title 24.

(3.) Sensor failure loss of communication identification

(4.) Automatic sensor detection

(5.) Capabilities for use with multiple-speed indoor fan systems

(6.) Utilize digital sensors: Dry bulb and Enthalpy

h. Economizer controller on EconoMi$er 2 models with RTU Open models shall be a 4-20mA design controlled directly by the RTU Open controller. RTU Open meets California Title 24 Fault Detection & Diagnostic (FDD) requirements

i. Economizer controller on EconoMi$er 2 models with ComfortLink models shall be controlled directly by the ComfortLink controller. ComfortLink meets California Title 24 Fault Detection & Diagnostic (FDD) requirements.

j. Shall be capable of introducing up to 100% outdoor air.

k. Shall be equipped with a barometric relief damper capable of relieving up to 100% return air and contain seals that meet ASHRAE 90.1 requirements.

l. Shall be designed to close damper(s) during loss-of-power situations with spring return built into motor.

m. Dry bulb outdoor air temperature sensor shall be provided as standard. Enthalpy sensor is also available on factory installed only. Outdoor air sensor setpoint shall be adjustable and shall range from 40 to 100° F / 4 to 38° C. Additional sensor options shall be available as accessories.

n. The economizer controller shall also provide control of an accessory power exhaust unit function. Factory set at 100%, with a range of 0% to 100%.

o. The economizer shall maintain minimum airflow into the building during occupied period and provide design ventilation rate for full occupancy.

p. Dampers shall be completely closed when the unit is in the unoccupied mode.

q. Economizer controller shall accept a 2-10 Vdc CO2 sensor input for IAQ/DCV control. In this mode, dampers shall modulate the outdoor air damper to provide ventilation based on the sensor input.

r. Compressor lockout temperature on W7220 is adjustable from -45 F to 80 F, set at a factory default of 32° F. Others shall open at 35° F (2C) and closes at 50° F (10° C)

s. Actuator shall be direct coupled to economizer gear. No linkage arms or control rods shall be acceptable.

t. Economizer controller shall provide indications when in free cooling mode, in the DCV mode, or the exhaust fan contact is closed.

5. Two-Position Damper (Factory installed on 3 Phase Models Only. Field installed on all 3 and 1 Phase Models)

a. Damper shall be a Two-Position Damper. Damper travel shall be from the full closed position to the field adjustable %-open setpoint.

b. Damper shall include adjustable damper travel from 25% to 100% (full open).

c. Damper shall include single or dual blade, gear driven dampers and actuator motor.

d. Actuator shall be direct coupled to damper gear. No linkage arms or control rods shall be acceptable.

e. Damper will admit up to 100% outdoor air for applicable rooftop units.

f. Damper shall close upon indoor (evaporator) fan shutoff and/or loss of power.

g. The damper actuator shall plug into the rooftop unit's wiring harness plug. No hard wiring shall be required.

h. Outside air hood shall include aluminum water entrainment filter.

6. Manual damper

a. Manual damper package shall consist of damper, air inlet screen, and rain hood which can be preset to admit up to 25 or 50% outdoor air for year round ventilation.

7. Humidi-MiZer Adaptive Dehumidification System (3-phase models only):

a. The Humidi-MiZer Adaptive Dehumidification System shall be factory installed and shall provide greater dehumidification of the occupied space by two modes of dehumidification operations in addition to its normal design cooling mode:

(1.) Subcooling mode further sub cools the hot liquid refrigerant leaving the condenser coil when both temperature and humidity in the space are not satisfied.

(2.) Hot gas reheat mode shall mix a portion of the hot gas from the discharge of the compressor with the hot liquid refrigerant leaving the condenser coil to create a two-phase heat transfer in the system, resulting in a neutral leaving air temperature when only humidity in the space is not satisfied.

(3.) Includes head pressure controller.

8. Head Pressure Control Package (MotorMaster)

a. Controller shall control coil head pressure by condenser-fan speed modulation or condenser-fan cycling and wind baffles.

b. Shall consist of solid-state control and condenser-coil temperature sensor to maintain condensing temperature at outdoor ambient temperatures down to -20°F (-29°C).

9. Low Ambient Controller (Factory installed only)
   a. Controller shall control coil head pressure by condenser-fan speed modulation or condenser-fan cycling and wind baffles.
   b. Shall consist of solid-state control and condenser-coil temperature sensor to maintain condensing temperature at outdoor ambient temperatures down to 0°F (-18°C). (Not available on 11 size models as standard unit cooling operation down to 0°F /-18°C).
10. Propane Conversion Kit
   a. Package shall contain all the necessary hardware and instructions to convert a standard natural gas unit for use with liquefied propane, up to 2000 ft (610m) elevation.
   b. Additional accessory kits may be required for applications above 2000 ft (610m) elevation.
11. Flue Shield (04-12 models only)
   a. Flue shield shall provide protection from the hot sides of the gas flue hood.
12. Condenser Coil Hail Guard Assembly (Factory installed option on 3-phase models. Field installed on all 3 and 1 phase models):
   a. Shall protect against damage from hail.
   b. Shall be of louvered style.
13. Unit-Mounted, Non-Fused Disconnect Switch:
   a. Switch shall be factory-installed, internally mounted.
   b. National Electric Code (NEC) and UL or ETL approved non-fused switch shall provide unit power shutoff.
   c. Shall be accessible from outside the unit.
   d. Shall provide local shutdown and lockout capability.
14. HACR Breaker
   a. These manual reset devices provide overload and short circuit protection for the unit. Factory wired and mounted with the units, with access cover to help provide environmental protection. On 575V applications, HACR breaker can only be used with WYE power distribution systems. Use on Delta power distribution systems is prohibited.
15. Convenience Outlet:
   a. Powered convenience outlet (3-phase models only).
      (1.) Outlet shall be powered from main line power to the rooftop unit.
      (2.) Outlet shall be powered from line side or load side of disconnect by installing contractor, as required by code. If outlet is powered from load side of disconnect, unit electrical ratings shall be UL or ETL certified and rated for additional outlet amperage.
      (3.) Outlet shall be factory-installed and internally mounted with easily accessible 115-v female receptacle.
      (4.) Outlet shall include 15 amp GFI receptacles with independent fuse protection.
      (5.) Voltage required to operate convenience outlet shall be provided by a factory-installed step-down transformer.
      (6.) Outlet shall be accessible from outside the unit.
      (7.) Outlet shall include a field-installed “Wet in Use” cover.
   b. Non-Powered convenience outlet.
      (1.) Outlet shall be powered from a separate 115/120v power source.
      (2.) A transformer shall not be included.
      (3.) Outlet shall be factory-installed and internally mounted with easily accessible 115-v female receptacle.
      (4.) Outlet shall include 15 amp GFI receptacles with independent fuse protection.
      (5.) Outlet shall be accessible from outside the unit.
      (6.) Outlet shall include a field-installed “Wet in Use” cover.
16. Flue Discharge Deflector:
   a. Flue discharge deflector shall direct unit exhaust vertically instead of horizontally.
   b. Deflector shall be defined as a “natural draft” device by the National Fuel and Gas (NFG) code.
17. Thru-the-Base Connectors:
   a. Kits shall provide connectors to permit gas and electrical connections to be brought to the unit through the unit basepan.

b. Minimum of four connection locations per unit.

18. Propeller Power Exhaust:
    a. Power exhaust shall be used in conjunction with an integrated economizer.
    b. Independent modules for vertical or horizontal return configurations shall be available.
    c. Horizontal power exhaust is shall be mounted in return ductwork.
    d. Power exhaust shall be controlled by economizer controller operation. Exhaust fans shall be energized when dampers open past the 0-100% adjustable setpoint on the economizer control.
19. Roof Curbs (Vertical):
    a. Full perimeter roof curb with exhaust capability providing separate air streams for energy recovery from the exhaust air without supply air contamination.
    b. Formed galvanized steel with wood nailer strip and shall be capable of supporting entire unit weight.
    c. Permits installation and securing of ductwork to curb prior to mounting unit on the curb.
20. High Altitude Gas Conversion Kit:
    a. Package shall contain all the necessary hardware and instructions to convert a standard natural gas unit to operate from 2000-7000 ft (610 to 2134m) elevation with natural gas or from 0-7000 ft (90-2134m) elevation with liquefied propane.
21. Outdoor Air Enthalpy Sensor:
    a. The outdoor air enthalpy sensor shall be used to provide single enthalpy control. When used in conjunction with a return air enthalpy sensor, the unit will provide differential enthalpy control. The sensor allows the unit to determine if outside air is suitable for free cooling.
22. Return Air Enthalpy Sensor:
    a. The return air enthalpy sensor shall be used in conjunction with an outdoor air enthalpy sensor to provide differential enthalpy control.
23. Indoor Air Quality (CO_2) Sensor:
    a. Shall be able to provide demand ventilation indoor air quality (IAQ) control.
    b. The IAQ sensor shall be available in duct mount, wall mount, or wall mount with LED display. The setpoint shall have adjustment capability.
24. Smoke detectors (factory-installed only):
    a. Shall be a Four-Wire Controller and Detector.
    b. Shall be environmental compensated with differential sensing for reliable, stable, and drift-free sensitivity.
    c. Shall use magnet-activated test/reset sensor switches.
    d. Shall have tool-less connection terminal access.
    e. Shall have a recessed momentary switch for testing and resetting the detector.
    f. Controller shall include:
        (1.) One set of normally open alarm initiation contacts for connection to an initiating device circuit on a fire alarm control panel.
        (2.) Two Form-C auxiliary alarm relays for interface with rooftop unit or other equipment.
        (3.) One Form-C supervision (trouble) relay to control the operation of the Trouble LED on a remote test/reset station.
        (4.) Capable of direct connection to two individual detector modules.
        (5.) Can be wired to up to 14 other duct smoke detectors for multiple fan shutdown applications
25. Winter start kit
    a. Shall contain a bypass device around the low pressure switch.
    b. Shall be required when mechanical cooling is required down to 25°F (-4°C).
    c. Shall not be required to operate on an economizer when below an outdoor ambient of 40°F (4°C).
26. Time Guard
    a. Shall prevent compressor short cycling by providing a 5-minute delay (±2 minutes) before restarting a compressor after shutdown for any reason.
    b. One device shall be required per compressor.
27. Hinged Access Panels
    a. Shall provide easy access through integrated quarter turn latches.
    b. Shall be on major panels of – filter, control box, fan motor and compressor
28. Display Kit for Variable Frequency Drive
    a. Kit allows the ability to access the VFD controller programs to provide special setup capabilities and diagnostics.

b. Kit contains display module and communication cable.

c. Display Kit can be permanently installed in the unit or used on any SAV system VFD controller as needed.

29. Foil faced insulation

a. Throughout unit cabinet air stream, non-fibrous and cleanable foil faced insulation is used.

Copyright 2014 Carrier Corp. • 7310 W. Morris St. • Indianapolis, IN 46231
Edition Date: 05/14

Catalog No: 48HC–4–14–02PD

Manufacturer reserves the right to change, at any time, specifications and designs without notice and without obligations.

Replaces: 48HC–04–14–01PD

50HCQ
High Efficient Packaged Rooftop Heat Pump Units
3 to 8.5 Tons

Carrier
turn to the experts

Product Data

WeatherMaster®

ADVANCED PRODUCT DATA

C10222

Turn to the Experts℠

Your Carrier Packaged Heat Pump rooftop unit (RTU) was designed by customers for customers. With no-strip screw collars, handled access panels, and more we've made your unit easy to install, easy to maintain and easy to use.

Easy to install:

All WeatherMaker™ units are field-convertible to horizontal air flow; no special adapter curbs or kits are necessary. Convertible airflow design makes it easy to adjust to unexpected job site complications. Lighter units make easy replacement. Carrier 3 - 8.5 ton 50HCQ rooftops fit on existing Carrier curbs dating back to 1989. Also, our large control box gives you room to work and room to mount Carrier accessory controls.

Easy to maintain:

Easy access handles by Carrier provide quick and easy access to all normally serviced components. Our "no-strip" screw system has superior holding power and guides screws into position while preventing the screw from stripping the unit's metal. Take accurate pressure readings by reading condenser pressure with panels on. Simply remove the black, composite plug, route your gauge line(s) through the hole, and connect them to the refrigeration service valve(s). Now, you can take refrigeration system pressure readings without affecting the condenser airflow.

Easy to use:

The newly designed, master terminal board by Carrier puts all your connections and troubleshooting points in one convenient place, standard. Most low voltage connections are made to the same board and make it easy to find what you're looking for and easy to access it.

Reliable:

Each unit comes with precision sized and tested scroll compressor that is internally protected from over temperature and pressures. Each refrigerant circuit is further protected with a high pressure, loss of charge and freeze protection switch. In addition, a liquid line filter drier and suction line accumulator protects each circuit. Each unit is factory tested prior to shipment to help ensure units operation once properly installed.

ADVANCED PRODUCT DATA

FEATURES AND BENEFITS

- Up to 28% lighter than similar industry units. Lighter rooftops make easier replacement jobs.
- 3 - 8.5 ton units fit on existing Carrier rooftop curbs making the utility connections the same. This saves time and money on replacement jobs.
- Standardized components and layout. Standardized components and controls make service and stocking parts easier.
- Scroll compressors on all units. This makes service, stocking parts, replacement, and trouble-shooting easier.
- Crankcase heater on all models (except 04 size) provides added protection in all applications.
- Precision-sized suction line accumulator provides high reliability by preventing liquid from entering the compressor during low ambient conditions and reverse cycle switch over.
- Field convertible airflow (3 - 8.5 tons). Being able to convert a unit from vertical airflow to horizontal makes it easy to overcome job site complications.
- 4-way reversing valve rapidly changes the flow of refrigerant to quickly changeover from cooling to heating and heating to cooling.
- Easy-adjust, belt drive motor available on all sizes. Carrier provides a factory solution for most points in the fan performance table. There's no need for field-supplied drives or motors.
- 3-5 ton models come standard with an Electric Drive X13, 5 speed/torque motor to provide exact performance in many applications. Belt drive motor optional.
- Provisions for bottom or side condensate drain.
- Capable of thru-the-base or thru-the-curb electrical routing.
- Dependable time/temperature defrost logic provides a defrost cycle, if needed, every 30, 60, 90 or 120 minutes and is adjustable.
- Single-point electrical connection.
- Sloped, composite drain pan. Sloped, composite drain pan sheds water; and won't rust.
- Standardized controls and control box layout. Standardized components and controls make stocking parts and service easier.
- Clean, easy to use control box.
- Standard coils are copper round tube, aluminum plate fin with optional coil coatings and copper fin design.
- Color-coded wiring.
- Large, laminated wiring and power wiring drawings which are affixed to unit make troubleshooting easy.
- Single, central terminal board for test and wiring connections.
- Fast-access, handled, panels for easy access to the blower and blower motor, control box, and compressors.
- "No-strip" screw system guides screws into the panel and captures them tightly without stripping the screw, the panel, or the unit.
- Exclusive, newly-designed indoor refrigerant header for easier maintenance and replacement.
- Standard mechanical cooling (125°F to 30°F or 52°C to -1°C) .
- 2-in. (51mm) disposable filters on all units.
- High capacity refrigerant filter drier on each circuit.
- High pressure switch, loss of charge switch and freeze protection adds greater unit reliability.

ADVANCED PRODUCT DATA

ENERGY STAR PARTNER

Carrier Comfort System PremierLink

Puron the environmentally sound refrigerant

ASHRAE 90.1 COMPLIANT

MODEL NUMBER NOMENCLATURE

1	2	3	4	5	6	7	8	9	10	11	12	13	14	15	16	17	18
5	0	H	C	Q	A	0	6	A	2	A	5	A	0	A	0	A	0

Unit Type
50 = Cooling/Elec Heat RTU

Model
HC = High Eff (with Puron refrigerant)

Heat Size
Q = Heat Pump

Refrig. System Options
A = 1–stage cooling compressor models
D = 2–stg. cooling compressor models

Cooling Tons
04 = 3 Ton
04 = 3 Ton
05 = 4 Ton
06 = 5 Ton
07 = 6 Ton
08 = 7.5 Ton
09 = 8.5 Ton

Sensor Options
A = None
B = RA smoke detector
C = SA smoke detector
D = RA & SA smoke detector
E = CO_2 sensor
F = RA smoke detector & CO_2
G = SA smoke detector & CO_2
H = RA & SA smoke detector & CO_2

Indoor Fan Options
0 = Electric drive X13 5–speed/torque motor (3–5 ton only)
1 = Standard static option – Belt drive
2 = Medium static option – Belt drive
3 = High static option – Belt drive

Coil Options (Outdoor – Indoor – Hail Guard)
A = Al/Cu – Al/Cu
B = Precoat Al/Cu – Al/Cu
C = E coat Al/Cu – Al/Cu
D = E coat Al/Cu – E coat Al/Cu
E = Cu/Cu – Al/Cu
F = Cu/Cu – Cu/Cu
M = Al/Cu – Al/Cu – Louvered Hail Guards
N = Precoat Al/Cu – Al/Cu – Louvered Hail Guards
P = E coat Al/Cu – Al/Cu – Louvered Hail Guards
Q = E coat Al/Cu – E coat Al/Cu – Louvered Hail Guards
R = Cu/Cu – Al/Cu – Louvered Hail Guards
S = Cu/Cu – Cu/Cu – Louvered Hail Guards

Voltage
1 = 575/3/60
3 = 208–230/1/60
5 = 208–230/3/60
6 = 460/3/60

Design Rev
Factory assigned

Base Unit Controls
0 = Electromechanical
1 = PremierLink DDC controller
2 = Open protocol DDC controller

Intake / Exhaust Options
A = None
B = Temp econo w/ baro relief
F = Enthalpy econo w/ baro relief
K = 2 position damper

Service Options
0 = None
1 = Unpowered convenience outlet
2 = Powered convenience outlet
3 = Hinged Panels
4 = Hinged Panels Unpowered CO
2 = Hinged Panels Powered CO

Electrical Options
A = None
C = Non–fused disc
D = Thru the base
F = Non–fused & thru the base

Packaging
0 = Standard
1 = LTL

ADVANCED PRODUCT DATA

FACTORY OPTIONS AND/OR ACCESSORIES

Table 1 – FACTORY-INSTALLED OPTIONS AND FIELD-INSTALLED ACCESSORIES

CATEGORY	ITEM	FACTORY INSTALLED OPTION	FIELD INSTALLED ACCESSORY
Cabinet	Thru–the–base electrical connections	X	X
Coil Options	Cu/Cu indoor and/or outdoor coils	X	
	Pre–coated outdoor coils	X	
	Premium, E–coated outdoor coils	X	
Condenser Protection	Condenser coil hail guard (louvered design)	X	X
Controls	Thermostats, temperature sensors, and subbases		X
	PremierLink DDC communicating controller	X	X
	RTU–MP Multi–protocol controller	X	
	Smoke detector (supply and/or return air)	X	
	Time Guard II compressor delay control circuit		X
	Phase Monitor		X
Economizers & Outdoor Air Dampers	EconoMi$er IV (for electro–mechanical controlled RTUs)	X	X
	EconoMi$er2 (for DDC controlled RTUs)	X	X
	Motorized 2 position outdoor air damper	X	X
	Manual outdoor air damper (25% and 50%)		X
	Barometric relief[1]	X	X
	Power exhaust		X
Economizer Sensors & IAQ Devices	Single dry bulb temperature sensors[2]	X	X
	Differential dry bulb temperature sensors[2]		X
	Single enthalpy sensors[2]	X	X
	Differential enthalpy sensors[2]		X
	CO_2 sensor (wall, duct, or unit mounted)[2]	X	X
Electric Heat	Electric Resistance Heaters		X
	Single Point Kit		X
Indoor Motor & Drive	Multiple motor and belt drive packages	X	
	Electric Drive, X13, 5–speed/torque (3–5 ton)	X	
Low Ambient Control	Motormaster® head pressure controller[3]		X
Power Options	Convenience outlet (powered)	X	
	Convenience outlet (unpowered)	X	
	Non–fused disconnect	X	
Roof Curbs	Roof curb 14–in. (356mm)		X
	Roof curb 24–in. (610mm)		X

NOTES:
1. Included with economizer.
2. Sensors for optimizing economizer.
3. See application data for assistance.

ADVANCED PRODUCT DATA

FACTORY OPTIONS AND/OR ACCESSORIES (cont.)

Economizer (dry bulb or enthalpy)

Economizers save money. They bring in fresh, outside air for ventilation; and provide cool, outside air to cool your building. This is the preferred method of low ambient cooling. When coupled to CO_2 sensors, Economizers can provide even more savings by coupling the ventilation air to only that amount required.

Economizers are available, installed and tested by the factory, with either enthalpy or dry bulb temperature inputs. There are also models for electromechanical as well as direct digital controllers. Additional sensors are available as accessories to optimize the economizers.

Economizers include gravity controlled, barometric relief which equalizes building pressure and ambient air pressures. This can be a cost effective solution to prevent building pressurization.

CO_2 Sensor

Improves productivity and saves money by working with the economizer to intake only the correct amount of outside air for ventilation. As occupants fill your building, the CO_2 sensor detects their presence through increasing CO_2 levels, and opens the economizer appropriately.

When the occupants leave, the CO_2 levels decrease, and the sensor appropriately closes the economizer. This intelligent control of the ventilation air, called Demand Control Ventilation (DCV) reduces the overall load on the rooftop, saving money.

Smoke Detectors

Trust the experts. Smoke detectors make your application safer and your job easier. Carrier smoke detectors immediately shut down the rooftop unit when smoke is detected. They are available, installed by the factory, for supply air, return air, or both.

Louvered Hail Guards

Sleek, louvered panels protect the condenser coil from hail damage, foreign objects, and incidental contact.

Convenience Outlet (powered or un-powered)

Lower service bills by including a convenience outlet in your specification. Carrier will install this service feature at our factory, powered. Provides a convenient, 15 amp, 115V GFCI receptacle.

Non-fused Disconnect

This OSHA-compliant, factory-installed, safety switch allows a service technician to locally secure power to the rooftop.

Power Exhaust Pressure Relief

Superior internal building pressure control. This field-installed accessory may eliminate the need for costly, external pressure control fans.

PremierLink™

This CCN controller regulates your rooftop's performance to tighter tolerances and expanded limits, as well as facilitates zoning systems and digital accessories. It also unites your Carrier HVAC equipment together on one, coherent CCN network. The PremierLink can be factory-installed, or easily field-installed.

RTU-MP, Multi-protocol Controller

Connect the rooftop to an existing BAS without needing complicated translators or adapter modules using the RTU-MP controller. This new controller speaks the 4 most common building automation system languages (Bacnet, Modbus, N2, and Lonworks). Use this controller when you have an existing BAS.

Time Guard II Control Circuit

This accessory protects your compressor by preventing short-cycling in the event of some other failure, prevents the compressor from restarting for 30 seconds after stopping. Not required with PremierLink®, RTU-MP, or authorized commercial thermostats.

Filter or Fan Status Switches

Use these differential pressure switches to detect a filter clog or indoor fan motor failure. When used in conjunction with a compatible unit controller/thermostat, the switches will activate an alarm to warn the appropriate personnel.

Motorized 2-Position Damper

The new Carrier 2-position, motorized outdoor air damper admits up to 100% outside air. Using reliable, gear-driven technology, the 2-position damper opens to allow ventilation air and closes when the rooftop stops, stopping unwanted infiltration.

ADVANCED PRODUCT DATA

Manual OA Damper

Manual outdoor air dampers are an economical way to bring in ventilation air. The dampers are available in 25% and 50% versions.

Motormaster Head Pressure Controller

The Motormaster motor controller is a low ambient, head pressure controller kit that is designed to maintain the unit's condenser head pressure during periods of low ambient cooling operation. This device should be used as an alternative to economizer free cooling not when economizer usage is either not appropriate or desired. The Motormaster will either cycle the outdoor fan motors or operate them at reduced speed to maintain the unit operation, depending on the model.

Alternate Motors and Drives

Some applications need larger horsepower motors, some need more airflow, and some need both. Regardless of the case, your Carrier expert has a factory installed combination to meet your application. A wide selection of motors and pulleys (drives) are available, factory installed, to handle nearly any application.

Thru-the-Base Connections

Thru-the-base connections, available as either an accessory or as a factory option, are necessary to ensure proper connection and seal when routing wire and piping through the rooftop's basepan and curb. These couplings eliminate roof penetration and should be considered for gas lines, main power lines, as well as control power.

Electric Heaters

Carrier offers a full line of field-installed accessory heaters. The heaters are very easy to use and install. All are pre-engineered and certified.

ADVANCED PRODUCT DATA

Table 2 – AHRI COOLING RATING TABLES

COOLING MODE						
UNIT	NOM. CAPACITY (TONS)	NET COOLING CAPACITY (BTUH)	TOTAL POWER (kW)	SEER	EER	IEER
A04	3	36,400	2.8	15.60	12.70	N/A
A05	4	47,000	3.6	15.80	12.80	N/A
A06	5	58,500	4.6	15.00	12.50	N/A
A07	6	72,000	6.0	N/A	12.00	12.8
D08	7.5	90,000	7.4	N/A	12.10	12.8
D09	8.5	100,000	8.3	N/A	12.00	12.5

NOTE:
All AHRI ratings are based on 230, 460 and 575 volt.
* Electric Drive (direct drive) X13 (5 speed/torque) motor. SEER rating is 13.0 for belt drive.
NA Not applicable

HEATING MODE					
UNIT	HSPF	HEATING, LOW		HEATING, HIGH	
		CAPACITY (BTUH)	COP	CAPACITY (BTUH)	COP
A04	8.00	18,400	N/A	34,000	N/A
A05	8.10	23,800	N/A	46,000	N/A
A06	8.20	28,600	N/A	55,000	N/A
A07	n/a	39,000	2.40	70,000	3.40
D08	n/a	47,000	2.40	84,000	3.40
D09	n/a	56,000	2.26	100,000	3.40

LEGEND

AHRI – Air Conditioning, Heating and Refrigeration Institute
ASHRAE – American Society of Heating, Refrigerating and Air Conditioning, Inc.
COP – Coefficient of Performance
EER – Energy Efficiency Ratio
HSPF – Heating Seasonal Performance Factor
IEER – Integrated Energy Efficiency Ratio
SEER – Seasonal Energy Efficiency Ratio

NOTES:
1. Rated and certified under AHRI Standard 210/240 or 340/360, as appropriate.
2. Ratings are based on:
   Cooling Standard: 80°F (27°C) db, 67°F (19°C) wb indoor air temp and 95°F db outdoor air temp.
   IEER Standard: A measure that expresses cooling part–load EER efficiency for commercial unitary air conditioning and heat pump equipment on the basis of weighted operation at variable load capacities.
3. All 50HCQ units comply with ASHRAE 90.1 Energy Standard for minimum SEER and EER requirements.

Use of the AHRI Certified TM Mark indicates a manufacturer's participation in the program For verification of certification for individual products, go to www.ahridirectory.org.

ADVANCED PRODUCT DATA

Table 3 – MINIMUM - MAXIMUM AIRFLOWS ELECTRIC HEAT

UNIT	COOLING		ELECTRIC HEATERS	
	MINIMUM	MAXIMUM	MINIMUM	MAXIMUM
50HCQ*04	900	1500	900	1500
50HCQ*05	1200	2000	1200	2000
50HCQ*06	1500	2500	1500	2500
50HCQ*07	1800	3000	1800	3000
50HCQ*08	2250	3750	2250*	3750
50HCQ*09	2550	4250	2552*	4250

*Minimum electric heat CFM exceptions :

UNIT	UNIT VOLTAGE	HEATER kW	UNIT CONFIGURATION	REQUIRED MINIMUM CFM
50HCQ*08	575	17.0	Horizontal or Vertical	2800
50HCQ*09		34.0		2350

Table 4 – SOUND PERFORMANCE TABLE

50HCQ	OUTDOOR SOUND (DB)								
	A–WEIGHTED	63	125	250	500	1000	2000	4000	8000
A04	76	51.8	69.0	64.6	67.8	70.7	63.8	60.9	59.0
A05	79	56.1	69.6	68.7	72.5	72.8	68.9	65.0	61.2
A06	79	57.7	66.6	68.7	72.9	74.5	71.1	67.6	62.6
A07	81	86.7	82.7	79.1	78.4	75.4	71.2	67.8	62.9
D08	83	87.3	81.6	79.7	80.6	79.0	73.5	69.2	66.1
D09	87	61.7	74.7	77.4	82.6	84.9	81.9	78.8	75.9

LEGEND

dB – Decibel

NOTES:

1. Outdoor sound data is measured in accordance with AHRI standard 270–95.
2. Measurements are expressed in terms of sound power. Do not compare these values to sound pressure values because sound pressure accounts for specific environmental factors which do not match individual applications. Sound power values are independent of the environment and therefore more accurate.
3. A–weighted sound ratings filter out very high and very low frequencies, to better approximate the response of an “average” human ear. A–weighted measurements for Carrier units are taken in accordance with 270–95.

ADVANCED PRODUCT DATA

Table 5 – PHYSICAL DATA (COOLING) 3 - 8.5 TONS

	50HCQA04	50HCQA05	50HCQA06	50HCQA07	50HCQD08	50HCQD09
Refrigeration System						
# Circuits / # Comp. / Type	1 / 1 / Scroll	1 / 1 / Scroll	1 / 1 / Scroll	1 / 1 / Scroll	2 / 2 / Scroll	2 / 2 / Scroll
Refrig. charge per circuit A/B (lbs–oz)	12 – 8 / –	15 – 8 / –	17 – 8 / –	15 – 8 / –	11 – 12 / 11 – 12	14–1/14–4
Metering Device	TXV	TXV	TXV	TXV	TXV	TXV
High pressure Trip / Reset (psig)	630 / 505	630 / 505	630 / 505	630 / 505	630 / 505	630 / 505
Loss of Charge Press. Trip / Reset (psig)	27 / 44	27 / 44	27 / 44	27 / 44	27 / 44	27 / 44
Compressor Capacity Staging (%)	100	100	100	100	50 / 100	50 / 100
Evap. Coil						
Material – Tube / Fin	Cu / Al	Cu / Al	Cu / Al	Cu / Al	Cu / Al	Cu / Al
Coil type	3/8” RTPF	3/8” RTPF	3/8” RTPF	3/8” RTPF	3/8” RTPF	3/8” RTPF
Rows / FPI	3 / 15	3 / 15	4/ 15	3/ 15	4 / 15	4 / 15
Total Face Area (ft^2)	5.5	7.3	7.3	8.9	11.1	11.1
Condensate Drain Conn. Size	3/4”	3/4”	3/4”	3/4”	3/4”	3/4”
Evap. Fan and Motor						
Standard Static 1 phase						
Motor Qty / Drive Type	1 / Direct	1 / Direct	1 / Direct	N/A	N/A	N/A
Max BHP	1	1	1	N/A	N/A	N/A
RPM Range	600–1200	600–1200	600–1200	N/A	N/A	N/A
Motor Frame Size	48	48	48	N/A	N/A	N/A
Fan Qty / Type	1 / Centrifugal	1 / Centrifugal	1 / Centrifugal	N/A	N/A	N/A
Fan Diameter x Length (in)	10 x 10	10 x 10	11 x 10	N/A	N/A	N/A
Standard Static 3 phase						
Motor Qty / Drive Type	1 / Direct	1 / Direct	1 / Direct	1 / Belt	1 / Belt	1 / Belt
Max BHP	1	1	1	1.2	1.2	2
RPM Range	600–1200	600–1200	600–1200	489–747	518–733	591–838
Motor Frame Size	48	48	48	56	56	56
Fan Qty / Type	1 / Centrifugal	1 / Centrifugal	1 / Centrifugal	1 / Centrifugal	1 / Centrifugal	1 / Centrifugal
Fan Diameter x Length (in)	10 x 10	10 x 10	11 x 10	15 x 15	15 x 15	15 x 15
Medium Static 3 phase						
Motor Qty / Drive Type	1 / Belt	1 / Belt	1 / Belt	1 / Belt	1 / Belt	1 / Belt
Max BHP	1.5	1.5	2.0	2.9	1.7	2.8
RPM Range	819–1251	920–1303	1066–1380	733–949	690–936	986–1232
Motor Frame Size	56	56	56	56	56	56
Fan Qty / Type	1 / Centrifugal	1 / Centrifugal	1 / Centrifugal	1 / Centrifugal	1 / Centrifugal	1 / Centrifugal
Fan Diameter x Length (in)	10 x 10	10 x 10	10 x 10	15 x 15	15 x 15	15 x 15
High Static 3 phase						
Motor Qty / Drive Type	1 / Belt	1 / Belt	1 / Belt	1 / Belt	1 / Belt	1 / Belt
Max BHP	2.0	2.0	2.9	4	2.8	4
RPM Range	1035–1466	1035–1466	1208–1639	909–1102	838–1084	1022–1240
Motor Frame Size	56	56	56	145	56	56
Fan Qty / Type	1 / Centrifugal	1 / Centrifugal	1 / Centrifugal	1 / Centrifugal	1 / Centrifugal	1 / Centrifugal
Fan Diameter x Length (in)	10 x 10	10 x 10	10 x 10	15 x 15	15 x 15	15 x 15
Cond. Coil						
Material – Tube / Fin	Cu / Al	Cu / Al	Cu / Al	Cu / Al	Cu / Al	Cu / Al
Coil type	3/8” RTPF	3/8” RTPF	3/8” RTPF	3/8” RTPF	3/8” RTPF	3/8” RTPF
Rows / FPI	2 / 17	2 / 17	2 / 17	2 / 17	2 / 17	3 / 17
Total Face Area (ft^2)	16.5	21.3	21.3	20.5	25.1	25.1
Cond. fan / motor						
Qty / Motor Drive Type	1 / direct	1 / direct	1 / direct	2 / direct	2 / direct	1 / direct
Motor HP / RPM	1/8 / 825	1/4 / 1100	1/4 / 1100	1/4 / 1100	1/4 / 1100	1 / 1175
Fan diameter (in)	22	22	22	22	22	30
Filters						
RA Filter # / Size (in)	2 / 16 x 25 x 2	4 / 16 x 16 x 2	4 / 16 x 16 x 2	4 / 16 x 20 x 2	4 / 20 x 20 x 2	4 / 20 x 20 x 2
OA inlet screen # / Size (in)	1 / 20 x 24 x 1	1 / 20 x 24 x 1	1 / 20 x 24 x 1	1 / 20 x 36 x 1	1 / 20 x 24 x 1	1 / 20 x 24 x 1

ADVANCED PRODUCT DATA

Table 6 – ELECTRIC HEAT - ELECTRICAL DATA **3 TONS**

UNIT	NOM. V–PH–HZ	IFM TYPE	ELECTRIC HEATER PART NUMBER CRHEATERXXXXXX	NOM PWR (kW)	APP PWR (kW)	SINGLE POINT KIT PART NUMBER CRSINGLEXXXXXX			
						WITHOUT C.O. or UNPWRD C.O.		WITH PWRD C.O.	
						WITHOUT P.E.	WITH P.E.	WITHOUT P.E.	WITH P.E.
50HCQA04	208/230–1–60	STD DD	101A00	4.4	3.3/4.0	037	037	037	037
			102A00	6.5	4.9/6.0	040	040	040	040
			103B00	8.7	6.5/8.0	040	040	040	040
			104B00	10.5	7.9/9.6	040	040	040	040
			102A00,102A00	13.0	9.8/11.9	041	041	041	041
	208/230–3–60	STD DD	101A00	4.4	3.3/4.0	–	–	–	–
			102A00	6.5	4.9/6.0	–	–	–	–
			103B00	8.7	6.5/8.0	–	–	037	037
			104B00	10.5	7.9/9.6	037	037	037	037
			105A00	16.0	12.0/14.7	038	038	038	038
		MED	101A00	4.4	3.3/4.0	–	–	–	–
			102A00	6.5	4.9/6.0	–	–	–	–
			103B00	8.7	6.5/8.0	–	–	–	037
			104B00	10.5	7.9/9.6	037	037	037	037
			105A00	16.0	12.0/14.7	038	038	038	038
		HIGH	101A00	4.4	3.3/4.0	–	–	–	–
			102A00	6.5	4.9/6.0	–	–	–	–
			103B00	8.7	6.5/8.0	–	–	–	037
			104B00	10.5	7.9/9.6	037	037	037	037
			105A00	16.0	12.0/14.7	038	038	038	038
	460–3–60	STD DD	106A00	6.0	5.5	–	–	–	–
			107A00	8.8	8.1	–	–	–	–
			108A00	11.5	10.6	–	–	–	–
			109A00	14.0	12.9	–	–	–	–
		MED	106A00	6.0	5.5	–	–	–	–
			107A00	8.8	8.1	–	–	–	–
			108A00	11.5	10.6	–	–	–	–
			109A00	14.0	12.9	–	–	–	–
		HIGH	106A00	6.0	5.5	–	–	–	–
			107A00	8.8	8.1	–	–	–	–
			108A00	11.5	10.6	–	–	–	–
			109A00	14.0	12.9	–	–	–	–

– No Single Point Kit required

LEGEND

APP PWR – 208 / 230V / 460V / 575V
BD – Belt drive motor
C.O. – Convenience outlet
DD – Electric Drive X13 5 speed/torque motor
FLA – Full load amps
IFM – Indoor fan motor
NOM PWR – 240V / 480V / 600V
P.E. – Power exhaust
PWRD – Powered convenience outlet
UNPWRD – Unpowered convenience outlet

ADVANCED PRODUCT DATA

Table 7 - (cont.) ELECTRIC HEAT - ELECTRICAL DATA 4 TONS

UNIT	NOM. V–PH–HZ	IFM TYPE	ELECTRIC HEATER PART NUMBER CRHEATERXXXXXX	NOM PWR (kW)	APP PWR (kW)	SINGLE POINT KIT PART NUMBER CRSINGLEXXXXXX			
						WITHOUT C.O. or UNPWRD C.O.		WITH PWRD C.O.	
						WITHOUT P.E.	WITH P.E.	WITHOUT P.E.	WITH P.E.
50HCQA05	208/230–1–60	STD DD	101A00	4.4	3.3/4.0	037	037	040	040
			103B00	8.7	6.5/8.0	040	040	040	040
			102A00,102A00	13.0	9.8/11.9	041	041	041	041
			103B00,103B00	17.4	13.1/16.0	041	041	041	041
			104B00,104B00	21.0	15.8/19.3	041	041	041	041
	208/230–3–60	STD DD	102A00	6.5	4.9/6.0	–	–	–	037
			103B00	8.7	6.5/8.0	037	037	037	037
			105A00	16.0	12.0/14.7	038	038	038	038
			104B00,104B00	21.0	15.8/19.3	039	039	039	039
		MED	102A00	6.5	4.9/6.0	–	–	–	–
			103B00	8.7	6.5/8.0	–	037	037	037
			105A00	16.0	12.0/14.7	038	038	038	038
			104B00,104B00	21.0	15.8/19.3	039	039	039	039
		HIGH	102A00	6.5	4.9/6.0	–	–	–	–
			103B00	8.7	6.5/8.0	–	037	037	037
			105A00	16.0	12.0/14.7	038	038	038	038
			104B00,104B00	21.0	15.8/19.3	039	039	039	039
	460–3–60	STD DD	106A00	6.0	5.5	–	–	–	–
			108A00	11.5	10.6	–	–	–	–
			109A00	14.0	12.9	–	–	–	–
			108A00,108A00	23.0	21.1	037	037	037	037
		MED	106A00	6.0	5.5	–	–	–	–
			108A00	11.5	10.6	–	–	–	–
			109A00	14.0	12.9	–	–	–	–
			108A00,108A00	23.0	21.1	037	037	037	037
		HIGH	106A00	6.0	5.5	–	–	–	–
			108A00	11.5	10.6	–	–	–	–
			109A00	14.0	12.9	–	–	–	–
			108A00,108A00	23.0	21.1	037	037	037	037

– No Single Point Kit required

LEGEND

APP PWR – 208 / 230V / 460V / 575V
BD – Belt drive motor
C.O. – Convenience outlet
DD – Electric Drive X13 5 speed/torque motor
FLA – Full load amps
IFM – Indoor fan motor
NOM PWR – 240V / 480V / 600V
P.E. – Power exhaust
PWRD – Powered convenience outlet
UNPWRD – Unpowered convenience outlet

ADVANCED PRODUCT DATA

UNIT	NOM. V–PH–HZ	IFM TYPE	ELECTRIC HEATER PART NUMBER CRHEATERXXXXXX	NOM PWR (kW)	APP PWR (kW)	SINGLE POINT KIT PART NUMBER CRSINGLEXXXXXX			
						WITHOUT C.O. or UNPWRD C.O.		WITH PWRD C.O.	
						WITHOUT P.E.	WITH P.E.	WITHOUT P.E.	WITH P.E.
50HCQA06	208/230–1–60	STD DD	102A00	6.5	4.9/6.0	040	040	040	040
			103B00	8.7	6.5/8.0	040	040	040	040
			102A00,102A00	13.0	9.8/11.9	041	041	041	041
			103B00,103B00	17.4	13.1/16.0	041	041	041	041
			104B00,104B00	21.0	15.8/19.3	041	041	041	041
	208/230–3–60	STD DD	102A00	6.5	4.9/6.0	–	–	037	037
			104B00	10.5	7.9/9.6	038	038	038	038
			105A00	16.0	12.0/14.7	038	038	038	038
			104B00,104B00	21.0	15.8/19.3	039	039	039	039
			104B00,105A00	26.5	19.9/24.3	039	039	039	039
		MED	102A00	6.5	4.9/6.0	–	–	037	037
			104B00	10.5	7.9/9.6	037	037	038	038
			105A00	16.0	12.0/14.7	038	038	038	038
			104B00,104B00	21.0	15.8/19.3	039	039	039	039
			104B00,105A00	26.5	19.9/24.3	039	039	039	039
		HIGH	102A00	6.5	4.9/6.0	–	–	037	037
			104B00	10.5	7.9/9.6	038	038	038	038
			105A00	16.0	12.0/14.7	038	038	038	038
			104B00,104B00	21.0	15.8/19.3	039	039	039	039
			104B00,105A00	26.5	19.9/24.3	039	039	039	039
	460–3–60	STD DD	106A00	6.0	5.5	–	–	–	–
			108A00	11.5	10.6	–	–	–	–
			109A00	14.0	12.9	–	–	–	–
			108A00,108A00	23.0	21.1	037	037	037	037
			108A00,109A00	25.5	23.4	037	037	037	037
		MED	106A00	6.0	5.5	–	–	–	–
			108A00	11.5	10.6	–	–	–	–
			109A00	14.0	12.9	–	–	–	–
			108A00,108A00	23.0	21.1	037	037	037	037
			108A00,109A00	25.5	23.4	037	037	037	037
		HIGH	106A00	6.0	5.5	–	–	–	–
			108A00	11.5	10.6	–	–	–	–
			109A00	14.0	12.9	–	–	–	–
			108A00,108A00	23.0	21.1	037	037	037	037
			108A00,109A00	25.5	23.4	037	037	037	037

– No Single Point Kit required

LEGEND

APP PWR – 208 / 230V / 460V / 575V
BD – Belt drive motor
C.O. – Convenience outlet
DD – Electric Drive X13 5 speed/torque motor
FLA – Full load amps
IFM – Indoor fan motor
NOM PWR – 240V / 480V / 600V
P.E. – Power exhaust
PWRD – Powered convenience outlet
UNPWRD – Unpowered convenience outlet

ADVANCED PRODUCT DATA

Table 7 - (cont.) ELECTRIC HEAT - ELECTRICAL DATA 6 TONS

UNIT	NOM. V–PH–HZ	IFM TYPE	ELECTRIC HEATER PART NUMBER CRHEATERXXXXXX	NOM PWR (kW)	APP PWR (kW)	SINGLE POINT KIT PART NUMBER CRSINGLEXXXXXX			
						WITHOUT C.O. or UNPWRD C.O.		WITH PWRD C.O.	
						WITHOUT P.E.	WITH P.E.	WITHOUT P.E.	WITH P.E.
50HCQA07	208/230–3–60	STD	264A00	6.5	4.9/6.0	042	042	042	045
			117A00	10.4	7.8/9.6	043	043	043	043
			110A00	16.0	12.0/14.7	043	043	043	043
			117A00,117A00	21.0	15.8/19.3	045	045	045	045
			110A00,117A00	26.5	19.9/24.3	045	045	045	045
		MED	264A00	6.5	4.9/6.0	042	042	042	045
			117A00	10.4	7.8/9.6	043	043	043	043
			110A00	16.0	12.0/14.7	043	043	043	043
			117A00,117A00	21.0	15.8/19.3	045	045	045	045
			110A00,117A00	26.5	19.9/24.3	045	045	045	045
		HIGH	264A00	6.5	4.9/6.0	045	045	045	045
			117A00	10.4	7.8/9.6	043	043	043	043
			110A00	16.0	12.0/14.7	043	043	043	043
			117A00,117A00	21.0	15.8/19.3	045	045	045	045
			110A00,117A00	26.5	19.9/24.3	045	045	045	045
	460–3–60	STD	265A00	6.0	5.5	042	042	042	042
			266A00	11.5	10.6	042	042	042	042
			267A00	14.0	12.9	042	042	042	042
			268A00	23.0	21.1	042	042	042	042
			269A00	25.5	23.4	042	042	042	042
		MED	265A00	6.0	5.5	042	042	042	042
			266A00	11.5	10.6	042	042	042	042
			267A00	14.0	12.9	042	042	042	042
			268A00	23.0	21.1	042	042	042	042
			269A00	25.5	23.4	042	042	042	042
		HIGH	265A00	6.0	5.5	042	042	042	042
			266A00	11.5	10.6	042	042	042	042
			267A00	14.0	12.9	042	042	042	042
			268A00	23.0	21.1	042	042	042	042
			269A00	25.5	23.4	042	048	048	048

– No Single Point Kit required

LEGEND

APP PWR – 208 / 230V / 460V / 575V
C.O. – Convenience outlet
FLA – Full load amps
IFM – Indoor fan motor
NOM PWR – 240V / 480V / 600V
P.E. – Power exhaust
PWRD – Powered convenience outlet
UNPWRD – Unpowered convenience outlet

ADVANCED PRODUCT DATA

UNIT	NOM. V–PH–HZ	IFM TYPE	ELECTRIC HEATER PART NUMBER CRHEATERXXXXXX	NOM PWR (kW)	APP PWR (kW)	SINGLE POINT KIT PART NUMBER CRSINGLEXXXXXX			
						WITHOUT C.O. or UNPWRD C.O.		WITH PWRD C.O.	
						WITHOUT P.E.	WITH P.E.	WITHOUT P.E.	WITH P.E.
50HCQD08 (2–STAGE COOL)	208/230–3–60	STD	117A00	10.4	7.8/9.6	049	049	049	049
			110A00	16.0	12.0/14.7	049	049	049	049
			111A00	24.8	18.6/22.8	051	051	051	051
			112A00	32.0	24.0/29.4	051	051	051	051
			112A00,117A00	42.4	31.8/38.9	053	053	053	053
		MED	117A00	10.4	7.8/9.6	049	049	049	049
			110A00	16.0	12.0/14.7	049	049	049	049
			111A00	24.8	18.6/22.8	051	051	051	051
			112A00	32.0	24.0/29.4	051	051	051	051
			112A00,117A00	42.4	31.8/38.9	053	053	053	053
		HIGH	117A00	10.4	7.8/9.6	049	049	049	049
			110A00	16.0	12.0/14.7	049	049	049	049
			111A00	24.8	18.6/22.8	051	051	051	051
			112A00	32.0	24.0/29.4	051	051	051	051
			112A00,117A00	42.4	31.8/38.9	053	053	053	053
	460–3–60	STD	116A00	13.9	12.8	047	047	047	047
			113A00	16.5	15.2	047	047	047	047
			114A00	27.8	25.5	047	050	050	050
			115A00	33.0	30.3	050	050	050	050
			114A00,116A00	41.7	38.3	052	052	052	052
		MED	116A00	13.9	12.8	047	047	047	047
			113A00	16.5	15.2	047	047	047	047
			114A00	27.8	25.5	047	050	050	050
			115A00	33.0	30.3	050	050	050	050
			114A00,116A00	41.7	38.3	052	052	052	052
		HIGH	116A00	13.9	12.8	047	047	047	047
			113A00	16.5	15.2	047	047	047	047
			114A00	27.8	25.5	050	050	050	050
			115A00	33.0	30.3	050	050	050	050
			114A00,116A00	41.7	38.3	052	052	052	052
	575–3–60	STD	118A00	17.0	17.0	047	047	047	047
			119A00	34.0	34.0	050	050	050	050
		MED	118A00	17.0	17.0	047	047	047	047
			119A00	34.0	34.0	050	050	050	050
		HIGH	118A00	17.0	17.0	047	047	047	047
			119A00	34.0	34.0	050	050	050	050

– No Single Point Kit required

LEGEND

APP PWR – 208 / 230V / 460V / 575V
C.O. – Convenience outlet
FLA – Full load amps
IFM – Indoor fan motor
NOM PWR – 240V / 480V / 600V
P.E. – Power exhaust
PWRD – Powered convenience outlet
UNPWRD – Unpowered convenience outlet

ADVANCED PRODUCT DATA

UNIT	NOM. V–PH–HZ	IFM TYPE	ELECTRIC HEATER PART NUMBER CRHEATERXXXXXX	NOM PWR (kW)	APP PWR (kW)	SINGLE POINT KIT PART NUMBER CRSINGLEXXXXXX			
						WITHOUT C.O. or UNPWRD C.O.		WITH PWRD C.O.	
						WITHOUT P.E.	WITH P.E.	WITHOUT P.E.	WITH P.E.
50HCQD09 (2 STAGE COOL)	208/230–3–60	STD	117A00	10.4	7.8/9.6	049	049	049	049
			110A00	16.0	12.0/14.7	049	049	049	049
			111A00	24.8	18.6/22.8	051	051	051	051
			112A00	32.0	24.0/29.4	051	051	051	051
			112A00,117A00	42.4	31.8/38.9	053	053	053	053
		MED	117A00	10.4	7.8/9.6	049	049	049	051
			110A00	16.0	12.0/14.7	049	049	049	051
			111A00	24.8	18.6/22.8	051	051	051	053
			112A00	32.0	24.0/29.4	051	051	051	053
			112A00,117A00	42.4	31.8/38.9	053	053	053	054
		HIGH	117A00	10.4	7.8/9.6	049	049	049	051
			110A00	16.0	12.0/14.7	049	049	049	051
			111A00	24.8	18.6/22.8	051	051	051	053
			112A00	32.0	24.0/29.4	051	051	051	053
			112A00,117A00	42.4	31.8/38.9	053	053	053	054
	460–3–60	STD	116A00	13.9	12.8	047	047	047	047
			113A00	16.5	15.2	047	047	047	047
			114A00	27.8	25.5	050	050	050	050
			115A00	33.0	30.3	050	050	050	050
			114A00,116A00	41.7	38.3	052	052	052	052
		MED	116A00	13.9	12.8	047	047	047	047
			113A00	16.5	15.2	047	047	047	047
			114A00	27.8	25.5	050	050	050	050
			115A00	33.0	30.3	050	050	050	050
			114A00,116A00	41.7	38.3	052	052	052	052
		HIGH	116A00	13.9	12.8	047	047	047	047
			113A00	16.5	15.2	047	047	047	047
			114A00	27.8	25.5	050	050	050	050
			115A00	33.0	30.3	050	050	050	050
			114A00,116A00	41.7	38.3	052	052	052	052
	575–3–60	STD	118A00	17.0	17.0	047	047	047	047
			119A00	34.0	34.0	050	050	050	050
		MED	118A00	17.0	17.0	047	047	047	047
			119A00	34.0	34.0	050	050	050	050
		HIGH	118A00	17.0	17.0	047	047	047	047
			119A00	34.0	34.0	050	050	050	050

– No Single Point Kit required

LEGEND

APP PWR – 208 / 230V / 460V / 575V
C.O. – Convenience outlet
FLA – Full load amps
IFM – Indoor fan motor
NOM PWR – 240V / 480V / 600V
P.E. – Power exhaust
PWRD – Powered convenience outlet
UNPWRD – Unpowered convenience outlet

ADVANCED PRODUCT DATA

WEIGHTS & DIMENSIONS

NOTES:

1. DIMENSIONS ARE IN INCHES, DIMENSIONS IN [ ] ARE IN MILLIMETERS.
2. CENTER OF GRAVITY
3. DIRECTION OF AIR FLOW

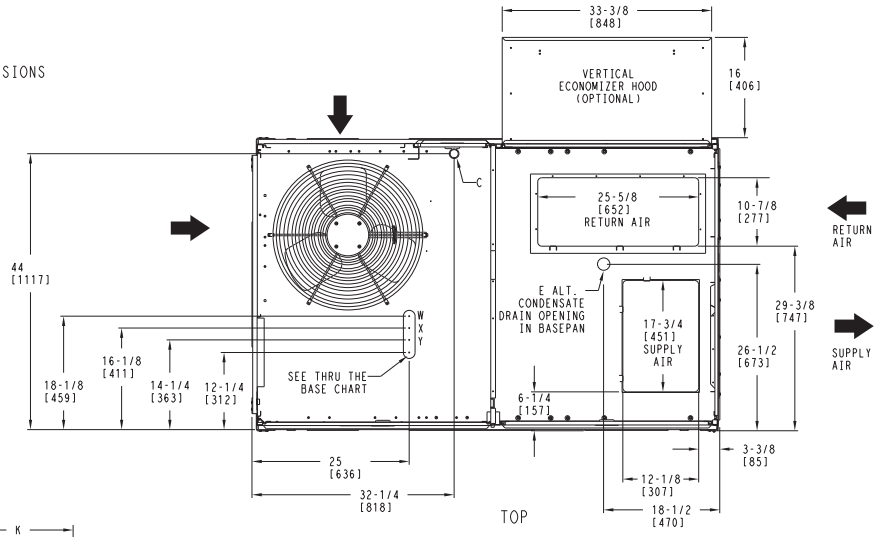

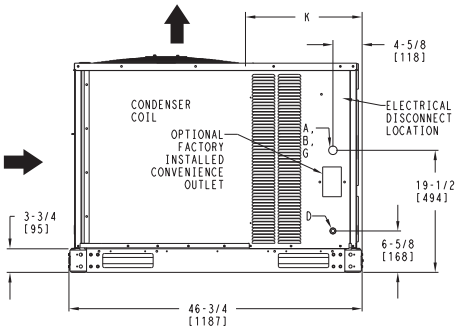

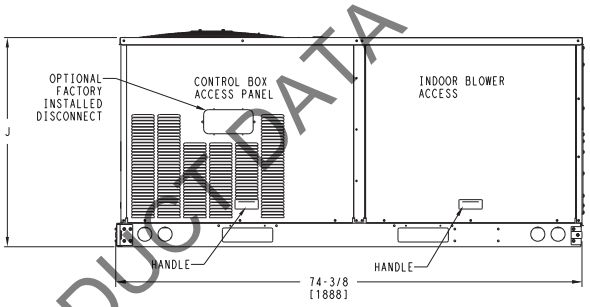

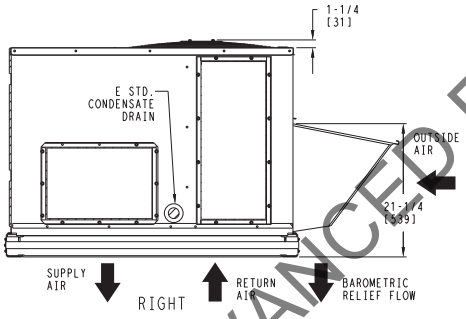

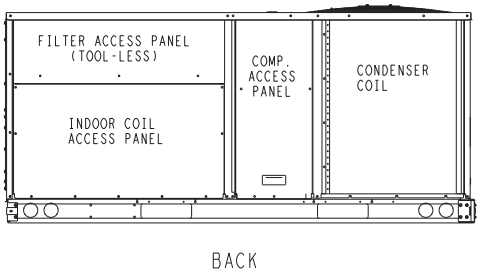

Vertical Connections / Economizer

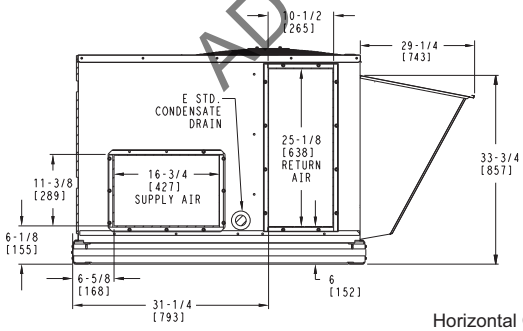

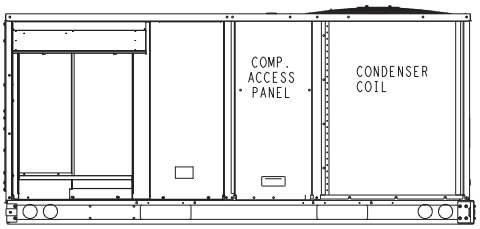

Horizontal Connections / Economizer

	CONNECTION SIZES
A	1 3/8" [35] DIA FIELD POWER SUPPLY HOLE
B	2" [51] DIA POWER SUPPLY KNOCKOUT
C	1 3/4" [44] DIA GAUGE ACCESS PLUG
D	7/8" [22] DIA FIELD CONTROL WIRING HOLE
E	3/4"-14 NPT CONDENSATE DRAIN
G	2 1/2 " [64] DIA POWER SUPPLY KNOCK-OUT

THRU-THE-BASE CHART THESE HOLES REQUIRED FOR USE CRBTMPWR001A01			
	THREADED CONDUIT SIZE	WIRE USE	REQ'D HOLE SIZES (MAX.)
W	1/2"	ACC.	7/8" [22.2]
X	1/2"	24V	7/8" [22.2]
Y *	3/4" (001)	POWER	1 1/8" [28.4]
	FOR "THRU-THE-BASEPAN" FACTORY OPTION, FITTINGS FOR ONLY X & Y ARE PROVIDED		
*	SELECT EITHER 3/4" OR 1/2" FOR POWER, DEPENDING ON WIRE SIZE		

UNIT	J	K
50HCQA04	33 3/8 [847]	18 5/8 [472]
50HCQA05	41 3/8 [1051]	14 7/8 [377]
50HCQA06	41 3/8 [1051]	14 7/8 [377]

C10230

Fig. 1 - Dimensions 50HCQ 04-06

ADVANCED PRODUCT DATA

WEIGHTS & DIMENSIONS (cont.)

UNIT	STD. UNIT WEIGHT		CORNER WEIGHT (A)		CORNER WEIGHT (B)		CORNER WEIGHT (C)		CORNER WEIGHT (D)		C.G.		HEIGHT
	LBS.	KG.	LBS.	KG.	LBS.	KG.	LBS.	KG.	LBS.	KG.	X	Y	Z
50HCQA04	495	225	130	59	118	54	118	54	130	59	35 3/8 [899]	23 3/8 [594]	18 3/8 [467]
50HCQA05	580	263	161	73	147	67	130	59	142	64	35 1/2 [902]	21 7/8 [556]	20 1/2 [521]
50HCQA06	610	277	165	75	152	69	141	64	152	69	35 3/4 [908]	22 1/2 [572]	20 3/4 [527]

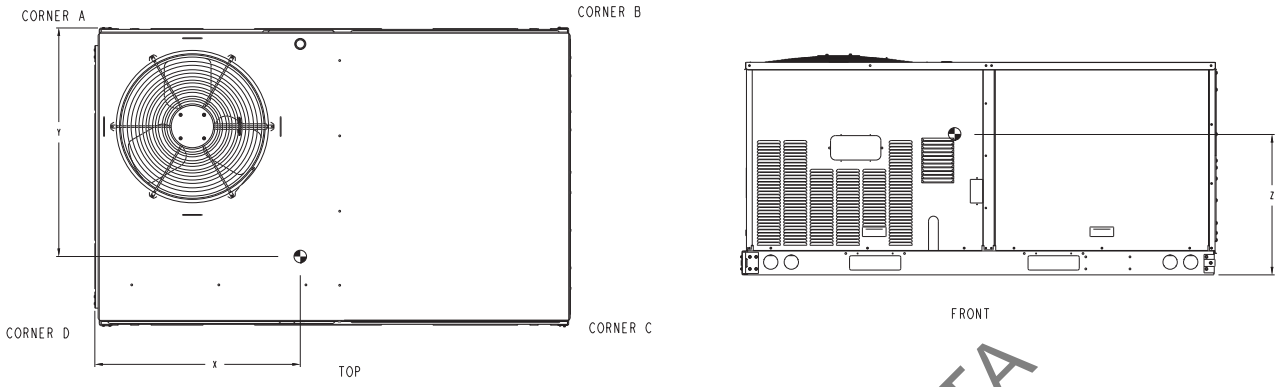

C10231

Fig. 2 - Dimensions 50HCQ 04-06

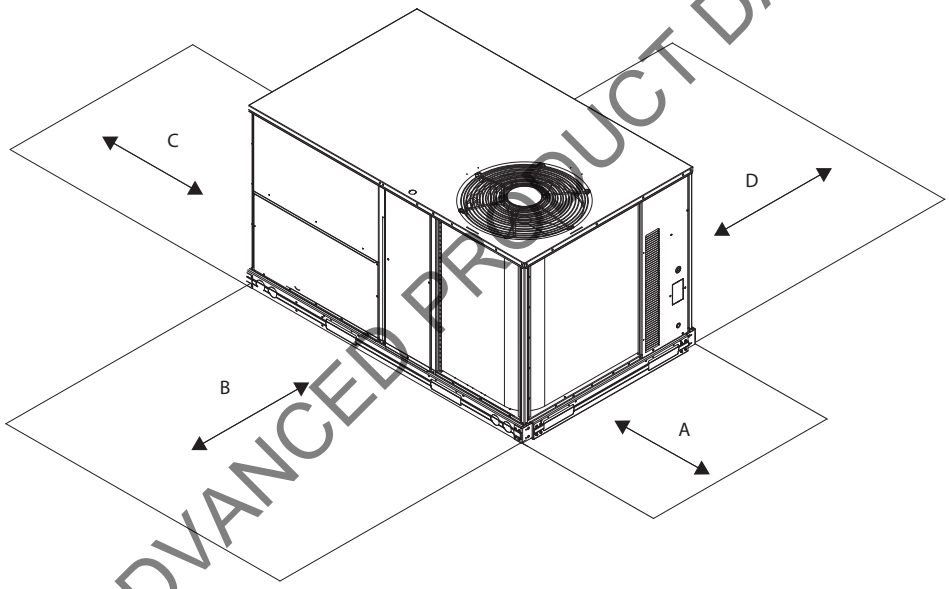

C08337

Fig. 3 - Service Clearance

ADVANCED PRODUCT DATA

LOC	DIMENSION	CONDITION
A	48–in. (1219 mm)	Unit disconnect is mounted on panel
	18–in. (457 mm)	No disconnect, convenience outlet option
	18–in. (457 mm)	Recommended service clearance
	12–in. (305 mm)	Minimum clearance
B	42–in. (1067 mm)	Surface behind servicer is grounded (e.g., metal, masonry wall)
	36–in. (914 mm)	Surface behind servicer is electrically non–conductive (e.g., wood, fiberglass)
	Special	Check for sources of flue products within 10–ft of unit fresh air intake hood
C	36–in. (914 mm)	Side condensate drain is used
	18–in. (457 mm)	Minimum clearance
D	42–in. (1067 mm)	Surface behind servicer is grounded (e.g., metal, masonry wall, another unit)
	36–in. (914 mm)	Surface behind servicer is electrically non–conductive (e.g., wood, fiberglass)

WEIGHTS & DIMENSIONS (cont.)

ROOFCURB ACCESSORY	A	UNIT SIZE
CRRFCURB001A02	1' - 2" [356]	50HCQA04-06
CRRFCURB002A02	2' - 0" [610]	

NOTES:
1. ROOFCURB ACCESSORY IS SHIPPED DISASSEMBLED.
2. INSULATED PANELS: 1" THK. POLYURETHANE FOAM, 1-3/4 # DENSITY.
3. DIMENSIONS IN [ ] ARE IN MILLIMETERS.
4. ROOFCURB: 18 GAGE STEEL ON 14" CURB, AND 16 GAGE STEEL ON 24" CURB.
5. ATTACH DUCTWORK TO CURB. (FLANGES OF DUCT REST ON CURB)
6. SERVICE CLEARANCE 4' ON EACH SIDE.
7. ⇨ DIRECTION OF AIR FLOW.
8. CONNECTOR PACKAGES CRBTMPWR001A01 AND 2A01 ARE FOR THRU-THE-CURB TYPE CONNECTIONS. PACKAGES CRBTMPWR003A01 AND 4A01 ARE FOR THE THRU-THE-BOTTOM TYPE CONNECTIONS.

CONNECTOR PKG. ACC.	B	C	D ALT DRAIN HOLE	POWER	CONTROL	ACCESSORY PWR
CRBTMPWR001A01 CRBTMPWR002A01	2'-8 7/16" [827]	1'-10 15/16" [583]	1 3/4" [44.5]	3/4" [19] NPT 1 1/4" [31.7]	1/2" [12.7] NPT	1/2" [12.7] NPT
CRBTMPWR003A01	↓	↓	↓	3/4" [19] NPT	↓	↓
CRBTMPWR004A01	↓	↓	↓	1 1/4" [31.7]	↓	↓

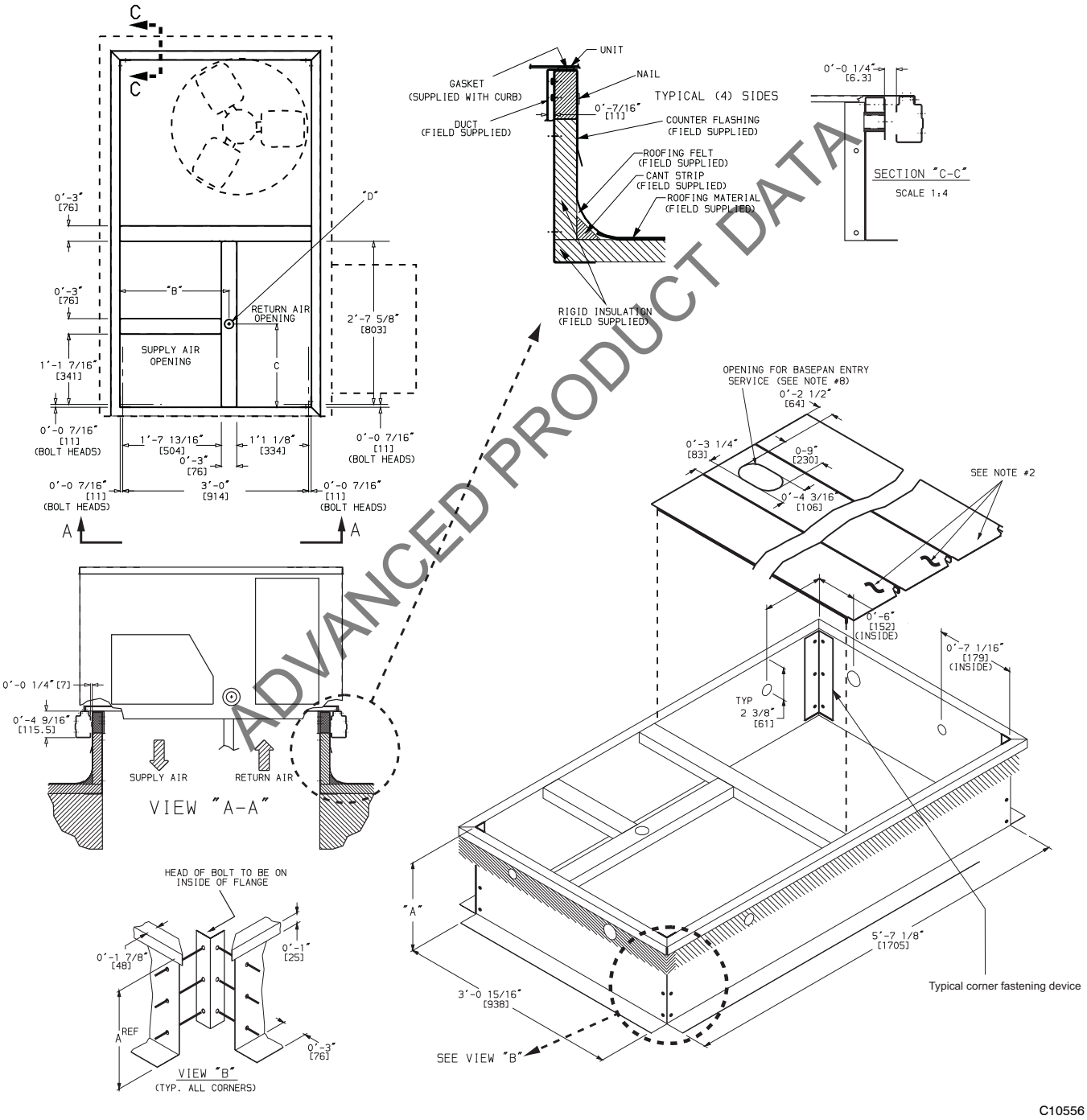

ADVANCED PRODUCT DATA

Fig. 4 - Curb Dimensions 50HCQ 04-06

WEIGHTS & DIMENSIONS (cont.)

NOTES:

1. DIMENSIONS ARE IN INCHES, DIMENSIONS IN [ ] ARE IN MILLIMETERS.
2. CENTER OF GRAVITY
3. DIRECTION OF AIR FLOW

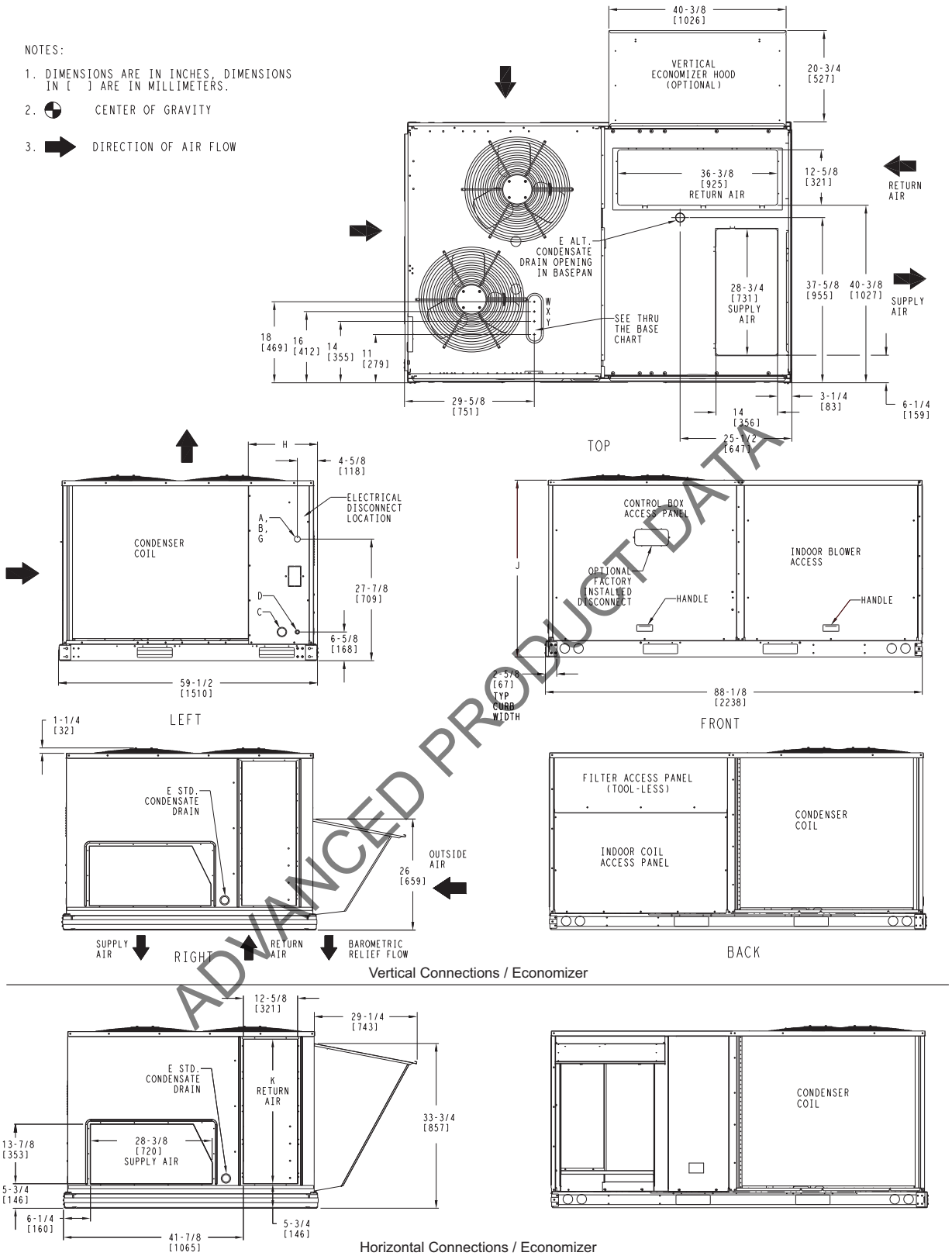

ADVANCED PRODUCT DATA

	CONNECTION SIZES
A	1 3/8" [35] DIA FIELD POWER SUPPLY HOLE
B	2 1/2" [64] DIA POWER SUPPLY KNOCKOUT
C	1 3/4" [51] DIA GAUGE ACCESS PLUG
D	7/8" [22] DIA FIELD CONTROL WIRING HOLE
E	3/4"-14 NPT CONDENSATE DRAIN
G	2 " [51] DIA POWER SUPPLY KNOCK-OUT

THRU-THE-BASE CHART (FIELD INST)

THESE HOLES REQUIRED FOR USE WITH ACCY KITS:
CRBTMPWR001A01: 07
CRBTMPWR002A01: 08

	THREADED CONDUIT SIZE	WIRE USE	REQ'D HOLE SIZES (MAX.)
W	1/2"	ACC.	7/8" [22.2]
X	1/2"	24V	7/8" [22.2]
Y	3/4" (001) 1 1/4" (002)	POWER	1 1/8" [28.6] 1 3/4" [44.4]

THRU-THE-BASE CHART (FIOP)

FOR "THRU-THE-BASEPAN" FACTORY OPTION, FITTINGS FOR ONLY X & Y ARE PROVIDED: (1) 1/2" & (1) 1 1/4" ELECTRICAL FITTINGS.

UNIT	J	K	H
50HCQA07	41 1/4 [1048]	33 [658]	15 7/8 [403]
50HCQD08	49 3/8 [1253]	36 3/8 [925]	15 7/8 [403]

C10464

Fig. 5 - Dimensions 50HCQ 07-08

WEIGHTS & DIMENSIONS (cont.)

UNIT	STD. UNIT WEIGHT *		CORNER WEIGHT (A)		CORNER WEIGHT (B)		CORNER WEIGHT (C)		CORNER WEIGHT (D)		C.G.		
	LBS.	KG.	LBS.	KG.	LBS.	KG.	LBS.	KG.	LBS.	KG.	X	Y	Z
50HCQA07	710	322	162	73.5	129	58.5	186	84.4	234	106	38 5/8 [481]	34 1/8 [867]	21 1/4 [540]
50HCQD08	875	397	190	86.2	160	72.6	253	114.8	284	128.8	40 [1016]	34 5/8 [879]	24 3/8 [619]

* STANDARD UNIT WEIGHT IS WITHOUT ELECTRIC HEAT AND WITHOUT PACKAGING.
FOR OPTIONS AND ACCESSORIES REFER TO THE PRODUCT DATA CATALOG.

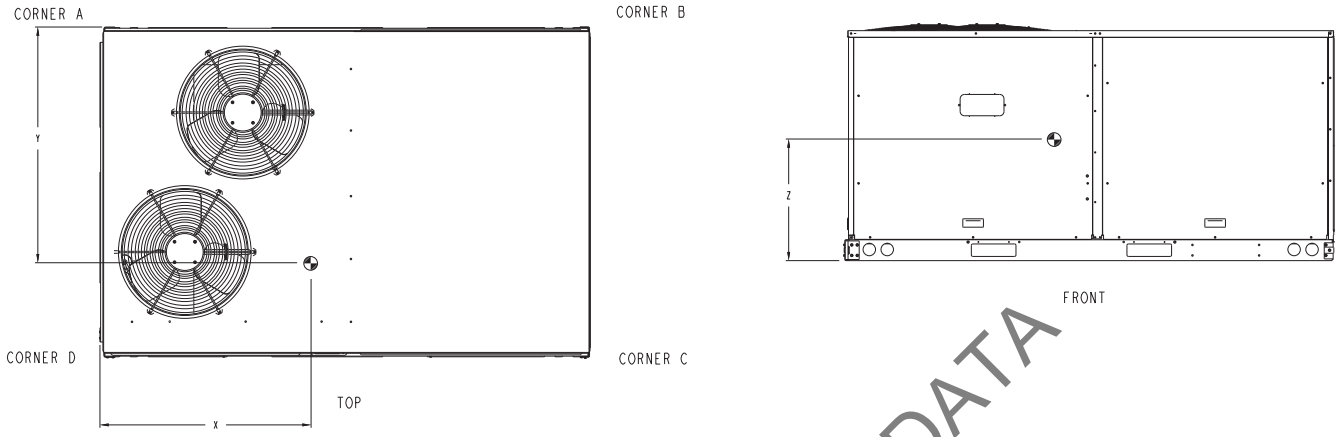

C10465

Fig. 6 - Dimensions 50HCQ 07-08

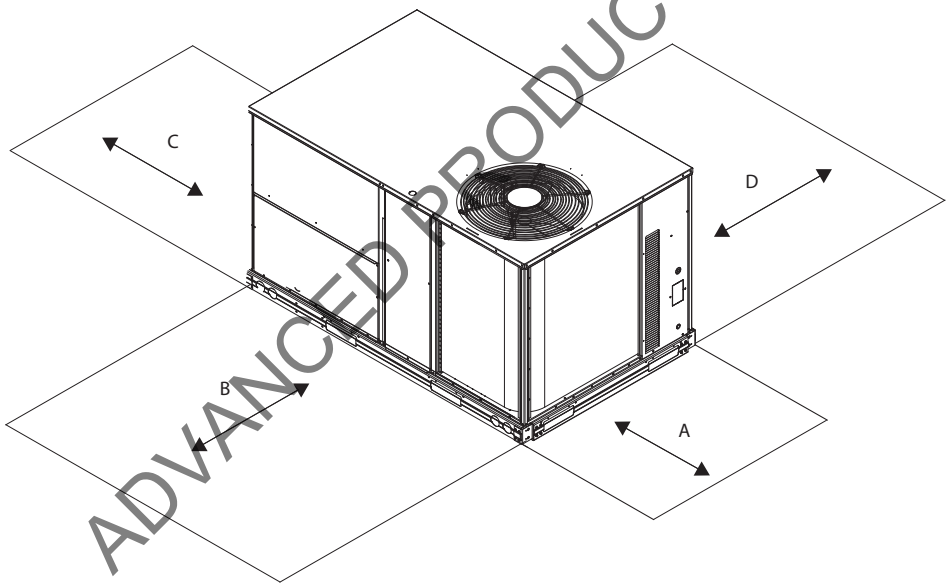

C08337

Fig. 7 - Service Clearance

LOC	DIMENSION	CONDITION
A	48 – in. (1219 mm)	Unit disconnect is mounted on panel
	18 – in. (457 mm)	No disconnect, convenience outlet option
	18 – in. (457 mm)	Recommended service clearance
	12 – in. (305 mm)	Minimum clearance
B	42 – in. (1067 mm)	Surface behind servicer is grounded (e.g., metal, masonry wall)
	36 – in. (914 mm)	Surface behind servicer is electrically non – conductive (e.g., wood, fiberglass)
	Special	Check for sources of flue products within 10 – ft of unit fresh air intake hood
C	36 – in. (914 mm)	Side condensate drain is used
	18 – in. (457 mm)	Minimum clearance
D	42 – in. (1067 mm)	Surface behind servicer is grounded (e.g., metal, masonry wall, another unit)
	36 – in. (914 mm)	Surface behind servicer is electrically non – conductive (e.g., wood, fiberglass)

ADVANCED PRODUCT DATA

WEIGHTS & DIMENSIONS (cont.)

ROOF CURB ACCESSORY #	A	UNIT SIZE
CRRFCURB003A02	1′-2" [356]	50HCQ*07-09
CRRFCURB004A02	2′-0" [610]	

NOTES:
1. ROOFCURB ACCESSORY IS SHIPPED DISASSEMBLED.
2. INSULATED PANELS: 1" THK. POLYURETHANE FOAM, 1-3/4 # DENSITY.
3. DIMENSIONS IN [ ] ARE IN MILLIMETERS.
4. ROOFCURB: 16 GAGE STEEL.
5. ATTACH DUCTWORK TO CURB. (FLANGES OF DUCT REST ON CURB).
6. SERVICE CLEARANCE 4" ON EACH SIDE.
7. ▨ DIRECTION OF AIR FLOW.
8. CONNECTOR PACKAGES CRBTMPWR001A01 AND 2A01 ARE FOR THRU-THE-CURB TYPE CONNECTIONS PACKAGES CRBTMPWR003A01 AND 4A01 ARE FOR THRU-THE-BOTTOM TYPE CONNECTIONS.

CONNECTOR PKG. ACC.	B	C	D (ALT. DRAIN HOLE)	POWER	CONTROL	ACCECCORY PWR
CRBTMPWR001A01	2′ 8-7/16" [827]	1′ 10-15/16" [583]	1-3/4" [44.5]	3/4" [19] NPT	1/2" [12.7] NPT	1/2" [12.7] NPT
CRBTMPWR002A01				1-1/4" [31.7] NPT		
CRBTMPWR003A01				3/4" [19] NPT		
CRBTMPWR004A01				1-1/4" [31.7] NPT		

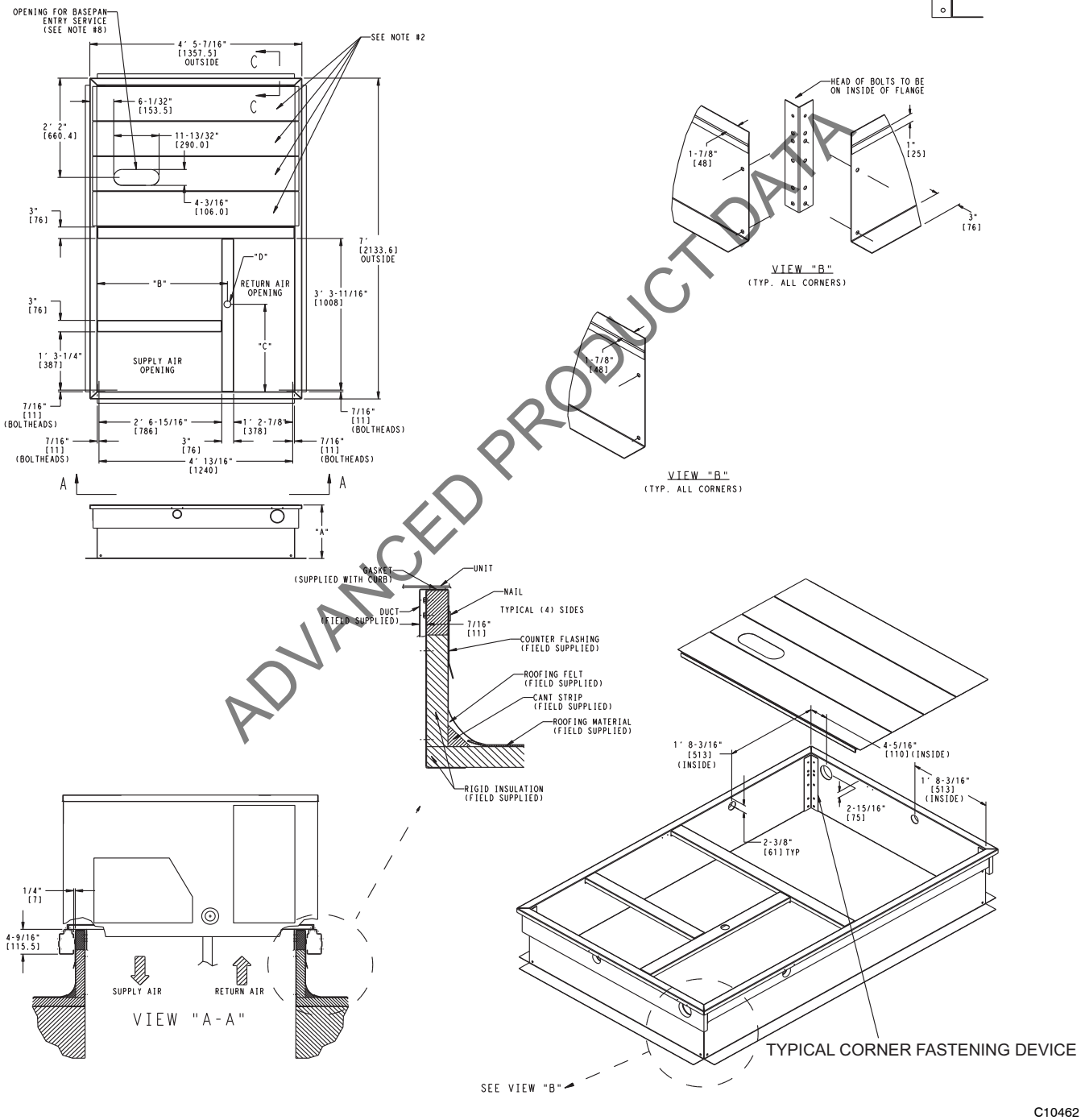

ADVANCED PRODUCT DATA

Fig. 8 - Curb Dimensions 50HCQ 07-09

WEIGHTS & DIMENSIONS (cont.)

NOTES:

1. DIMENSIONS ARE IN INCHES, DIMENSIONS IN [ ] ARE IN MILLIMETERS.
2. CENTER OF GRAVITY
3. DIRECTION OF AIR FLOW

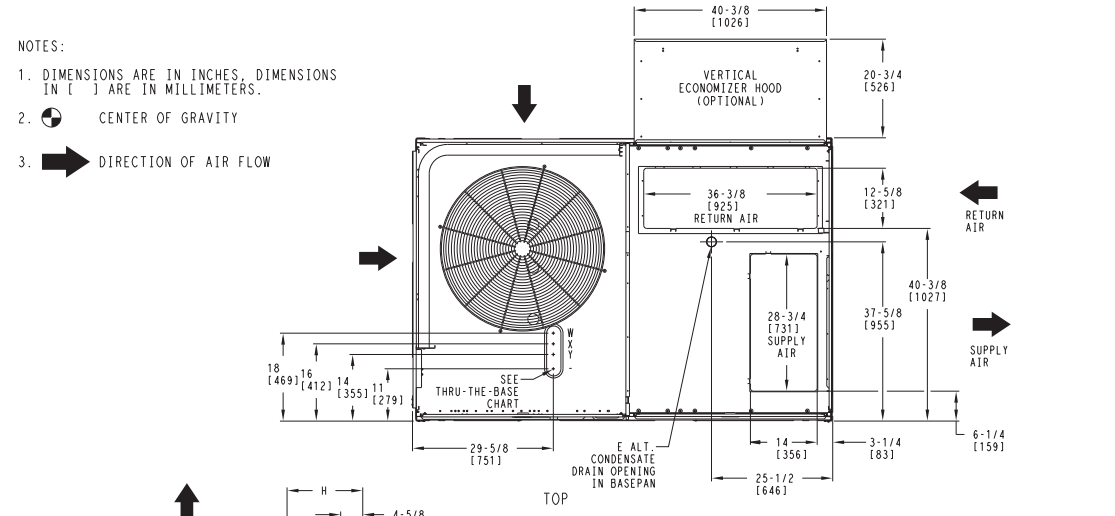

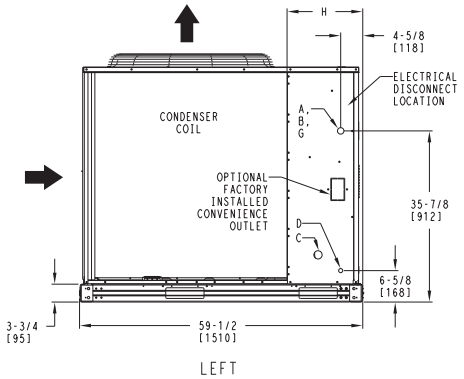

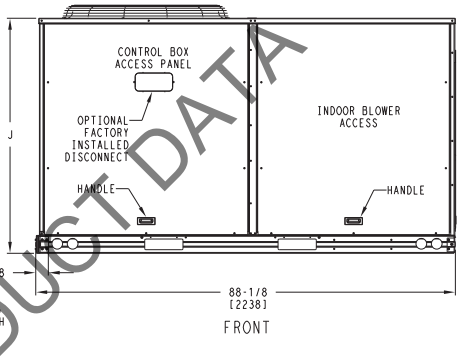

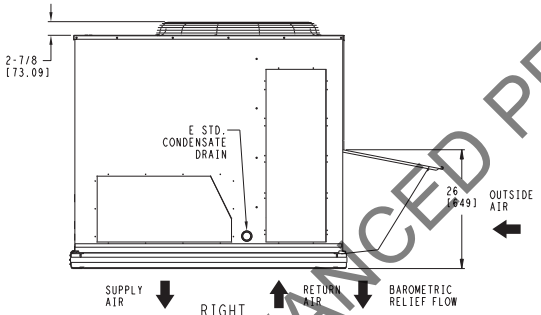

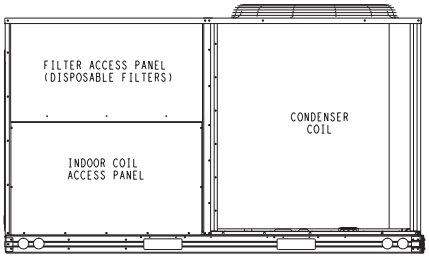

Vertical Connections / Economizer

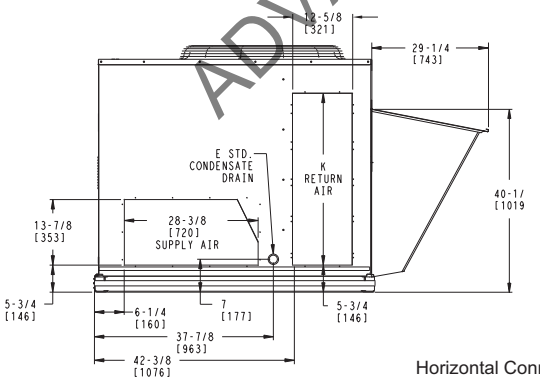

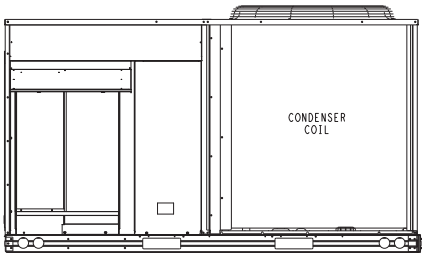

Horizontal Connections / Economizer

	CONNECTION SIZES
A	1 3/8" [35] DIA FIELD POWER SUPPLY HOLE
B	2 1/2" [64] DIA POWER SUPPLY KNOCKOUT
C	1 3/4" [51] DIA GAUGE ACCESS PLUG
D	7/8" [22] DIA FIELD CONTROL WIRING HOLE
E	3/4"-14 NPT CONDENSATE DRAIN
G	2" [51] DIA POWER SUPPLY KNOCK-OUT

THRU-THE-BASE CHART THESE HOLES REQUIRED FOR USE CRBTMPWR002A01			
	THREADED CONDUIT SIZE	WIRE USE	REQ'D HOLE SIZES (MAX.)
W	1/2"	ACC.	7/8" [22.2]
X	1/2"	24V	7/8" [22.2]
Y	1 1/4"	POWER	1 3/4" [44.4]
	FOR "THRU-THE-BASEPAN" FACTORY OPTION, FITTINGS FOR ONLY X & Y ARE PROVIDED		

UNIT	H	J	K
50HCQD09	15 7/8 [403]	49 3/8 [1253]	36 3/8 [925]

C10460

Fig. 9 - Dimensions 50HCQ 09

ADVANCED PRODUCT DATA

WEIGHTS & DIMENSIONS (cont.)

UNIT	STD. UNIT WEIGHT*		CORNER WEIGHT (A)		CORNER WEIGHT (B)		CORNER WEIGHT (C)		CORNER WEIGHT (D)		C.G.		
	LBS.	KG.	LBS.	KG.	LBS.	KG.	LBS.	KG.	LBS.	KG.	X	Y	Z
50TCQD09	1020	463	255	115.7	199	90.3	248	112.5	318	144.2	38 1/4 [972]	32 [813]	24 [610]

* STANDARD UNIT WEIGHT IS WITHOUT ELECTRIC HEAT AND WITHOUT PACKAGING.
FOR OPTIONS AND ACCESSORIES REFER TO THE PRODUCT DATA CATALOG.

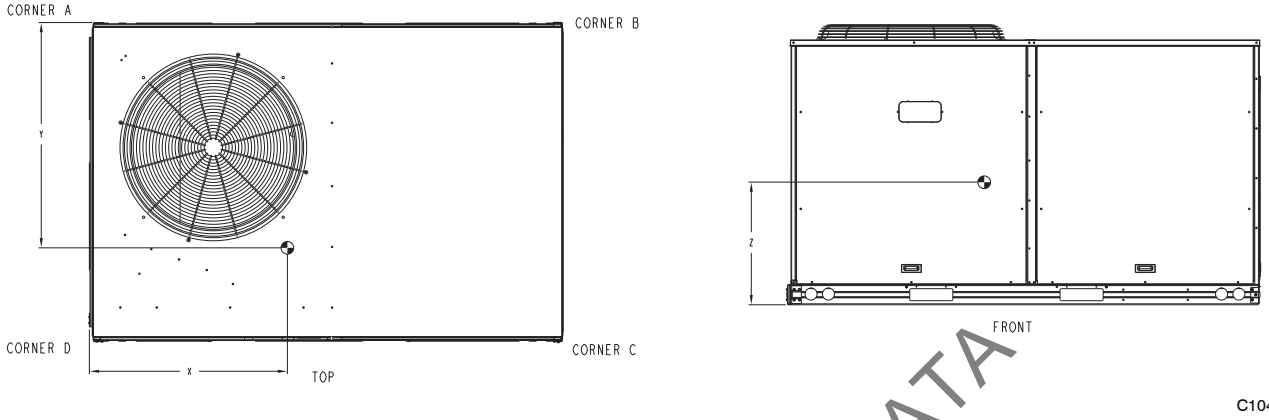

Fig. 10 - Dimensions 50HCQ 09

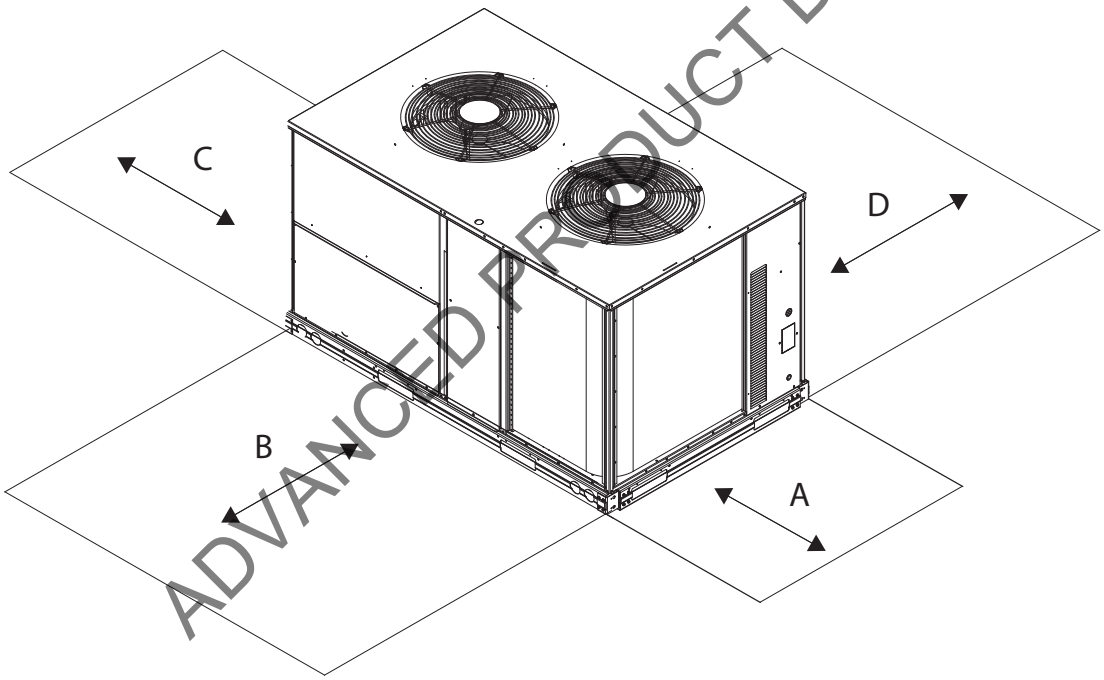

Fig. 11 - Service Clearance

LOC	DIMENSION	CONDITION
A	48–in. (1219 mm)	Unit disconnect is mounted on panel
	18–in. (457 mm)	No disconnect, convenience outlet option
	18–in. (457 mm)	Recommended service clearance
	12–in. (305 mm)	Minimum clearance
B	42–in. (1067 mm)	Surface behind servicer is grounded (e.g., metal, masonry wall)
	36–in. (914 mm)	Surface behind servicer is electrically non–conductive (e.g., wood, fiberglass)
	Special	Check for sources of flue products within 10–ft of unit fresh air intake hood
C	36–in. (914 mm)	Side condensate drain is used
	18–in. (457 mm)	Minimum clearance
D	42–in. (1067 mm)	Surface behind servicer is grounded (e.g., metal, masonry wall, another unit)
	36–in. (914 mm)	Surface behind servicer is electrically non–conductive (e.g., wood, fiberglass)

ADVANCED PRODUCT DATA

Table 7 – COOLING CAPACITIES 1-STAGE COOLING 3 TONS

50HCQA04				AMBIENT TEMPERATURE														
				85			95			105			115			125		
				EAT (db)			EAT (db)			EAT (db)			EAT (db)			EA (db)		
				75	80	85	75	80	85	75	80	85	75	80	85	75	80	85
900 Cfm	EAT (wb)	58	THC	31.8	31.8	36.0	30.5	30.5	34.5	29.0	29.0	32.9	27.5	27.5	31.1	25.7	25.7	29.2
			SHC	27.5	31.8	36.0	26.4	30.5	34.5	25.2	29.0	32.9	23.8	27.5	31.1	22.3	25.7	29.2
		62	THC	33.5	33.5	34.2	31.8	31.8	33.4	30.0	30.0	32.5	28.0	28.0	31.4	25.9	25.9	30.2
			SHC	24.9	29.5	34.2	24.0	28.7	33.4	23.2	27.8	32.5	22.2	26.8	31.4	21.1	25.7	30.2
		67	THC	36.8	36.8	36.8	34.9	34.9	34.9	32.9	32.9	32.9	30.8	30.8	30.8	28.4	28.4	28.4
			SHC	20.6	25.2	29.9	19.8	24.4	29.1	18.9	23.6	28.3	18.0	22.7	27.4	17.0	21.7	26.4
		72	THC	40.4	40.4	40.4	38.4	38.4	38.4	36.2	36.2	36.2	33.8	33.8	33.8	31.3	31.3	31.3
			SHC	16.1	20.9	25.6	15.4	20.1	24.8	14.5	19.2	24.0	13.6	18.3	23.0	12.7	17.4	22.1
		76	THC	–	43.4	43.4	–	41.2	41.2	–	38.9	38.9	–	36.4	36.4	–	33.7	33.7
			SHC	–	17.3	22.2	–	16.5	21.5	–	15.7	20.6	–	14.8	19.6	–	13.9	18.7
1050 Cfm	EAT (wb)	58	THC	33.5	33.5	38.0	32.1	32.1	36.4	30.6	30.6	34.7	28.9	28.9	32.7	27.0	27.0	30.6
			SHC	29.0	33.5	38.0	27.8	32.1	36.4	26.5	30.6	34.7	25.0	28.9	32.7	23.4	27.0	30.6
		62	THC	34.6	34.6	37.4	32.8	32.8	36.5	30.9	30.9	35.5	28.9	28.9	34.1	27.0	27.0	31.9
			SHC	26.7	32.1	37.4	25.9	31.2	36.5	24.9	30.2	35.5	23.8	28.9	34.1	22.2	27.0	31.9
		67	THC	37.9	37.9	37.9	35.9	35.9	35.9	33.8	33.8	33.8	31.5	31.5	31.5	29.0	29.0	29.0
			SHC	21.8	27.2	32.6	21.0	26.4	31.8	20.1	25.5	30.9	19.2	24.6	29.9	18.2	23.6	28.9
		72	THC	41.5	41.5	41.5	39.4	39.4	39.4	37.1	37.1	37.1	34.6	34.6	34.6	31.9	31.9	31.9
			SHC	16.7	22.1	27.6	15.9	21.3	26.7	15.0	20.4	25.9	14.1	19.5	24.9	13.1	18.6	24.0
		76	THC	–	44.6	44.6	–	42.3	42.3	–	39.8	39.8	–	37.2	37.2	–	34.4	34.4
			SHC	–	18.0	23.6	–	17.2	22.8	–	16.3	21.9	–	15.4	21.0	–	14.5	20.0
1200 Cfm	EAT (wb)	58	THC	35.0	35.0	39.7	33.5	33.5	38.0	31.8	31.8	36.1	30.0	30.0	34.0	28.1	28.1	31.8
			SHC	30.3	35.0	39.7	29.0	33.5	38.0	27.6	31.8	36.1	26.0	30.0	34.0	24.3	28.1	31.8
		62	THC	35.5	35.5	40.4	33.7	33.7	39.3	31.9	31.9	37.6	30.1	30.1	35.4	28.1	28.1	33.1
			SHC	28.4	34.4	40.4	27.4	33.3	39.3	26.2	31.9	37.6	24.7	30.1	35.4	23.1	28.1	33.1
		67	THC	38.7	38.7	38.7	36.7	36.7	36.7	34.5	34.5	34.5	32.1	32.1	32.4	29.5	29.5	31.4
			SHC	22.9	29.0	35.1	22.1	28.2	34.3	21.2	27.3	33.4	20.3	26.3	32.4	19.2	25.3	31.4
		72	THC	42.4	42.4	42.4	40.2	40.2	40.2	37.8	37.8	37.8	35.2	35.2	35.2	32.5	32.5	32.5
			SHC	17.1	23.3	29.4	16.3	22.5	28.6	15.5	21.6	27.7	14.5	20.7	26.8	13.6	19.7	25.8
		76	THC	–	45.5	45.5	–	43.1	43.1	–	40.6	40.6	–	37.8	37.8	–	34.9	34.9
			SHC	–	18.6	25.0	–	17.8	24.1	–	17.0	23.2	–	16.0	22.3	–	15.1	21.3
1350 Cfm	EAT (wb)	58	THC	36.2	36.2	41.1	34.6	34.6	39.3	32.9	32.9	37.3	31.0	31.0	35.1	28.9	28.9	32.8
			SHC	31.4	36.2	41.1	30.0	34.6	39.3	28.5	32.9	37.3	26.9	31.0	35.1	25.1	28.9	32.8
		62	THC	36.3	36.3	42.8	34.7	34.7	40.9	32.9	32.9	38.8	31.0	31.0	36.6	29.0	29.0	34.1
			SHC	29.8	36.3	42.8	28.5	34.7	40.9	27.1	32.9	38.8	25.5	31.0	36.6	23.8	29.0	34.1
		67	THC	39.4	39.4	39.4	37.3	37.3	37.3	35.0	35.0	35.8	32.5	32.5	34.8	29.9	29.9	33.7
			SHC	24.0	30.8	37.6	23.2	30.0	36.8	22.3	29.1	35.8	21.3	28.1	34.8	20.3	27.0	33.7
		72	THC	43.1	43.1	43.1	40.8	40.8	40.8	38.3	38.3	38.3	35.7	35.7	35.7	32.9	32.9	32.9
			SHC	17.6	24.4	31.3	16.8	23.6	30.4	15.9	22.7	29.5	14.9	21.8	28.6	14.0	20.8	27.6
		76	THC	–	46.2	46.2	–	43.8	43.8	–	41.1	41.1	–	38.3	38.3	–	35.3	35.3
			SHC	–	19.2	26.2	–	18.4	25.4	–	17.5	24.5	–	16.6	23.5	–	15.6	22.5
1500 Cfm	EAT (wb)	58	THC	37.3	37.3	42.3	35.6	35.6	40.4	33.8	33.8	38.3	31.8	31.8	36.1	29.7	29.7	33.6
			SHC	32.3	37.3	42.3	30.9	35.6	40.4	29.3	33.8	38.3	27.6	31.8	36.1	25.7	29.7	33.6
		62	THC	37.3	37.3	44.0	35.7	35.7	42.0	33.9	33.9	39.9	31.9	31.9	37.5	29.7	29.7	35.0
			SHC	30.7	37.3	44.0	29.3	35.7	42.0	27.8	33.9	39.9	26.2	31.9	37.5	24.4	29.7	35.0
		67	THC	39.9	39.9	40.0	37.8	37.8	39.1	35.4	35.4	38.1	32.9	32.9	37.1	30.3	30.3	35.9
			SHC	25.1	32.5	40.0	24.2	31.7	39.1	23.3	30.7	38.1	22.3	29.7	37.1	21.2	28.5	35.9
		72	THC	43.7	43.7	43.7	41.3	41.3	41.3	38.8	38.8	38.8	36.1	36.1	36.1	33.2	33.2	33.2
			SHC	18.0	25.5	33.0	17.2	24.7	32.1	16.3	23.8	31.2	15.3	22.8	30.3	14.3	21.8	29.3
		76	THC	–	46.8	46.8	–	44.3	44.3	–	41.6	41.6	–	38.7	38.7	–	35.6	35.6
			SHC	–	19.8	27.4	–	19.0	26.6	–	18.1	25.7	–	17.1	24.7	–	16.1	23.7

LEGEND

– – Do not operate in this region (Points are outside SST and SDT permissible operating range)
Cfm – Cubic feet per minute (supply air)
EAT(db) – Entering air temperature (dry bulb)
EAT(wb) – Entering air temperature (wet bulb)
SHC – Sensible heat capacity
THC – Total capacity

ADVANCED PRODUCT DATA

Table 8 – COOLING CAPACITIES 1-STAGE COOLING 4 TONS

50HCQA05				AMBIENT TEMPERATURE														
				85			95			105			115			125		
				EAT (db)			EAT (db)			EAT (db)			EAT (db)			EA (db)		
				75	80	85	75	80	85	75	80	85	75	80	85	75	80	85
1200 Cfm	EAT (wb)	58	THC	41.1	41.1	46.6	39.5	39.5	44.8	37.7	37.7	42.7	35.8	35.8	40.6	33.7	33.7	38.2
			SHC	35.6	41.1	46.6	34.2	39.5	44.8	32.7	37.7	42.7	31.0	35.8	40.6	29.2	33.7	38.2
		62	THC	43.1	43.1	44.7	41.0	41.0	43.6	38.7	38.7	42.5	36.3	36.3	41.2	33.8	33.8	39.8
			SHC	32.3	38.5	44.7	31.3	37.5	43.6	30.2	36.3	42.5	29.0	35.1	41.2	27.8	33.8	39.8
		67	THC	47.4	47.4	47.4	45.1	45.1	45.1	42.6	42.6	42.6	39.9	39.9	39.9	37.1	37.1	37.1
			SHC	26.7	32.9	39.1	25.7	31.9	38.0	24.6	30.8	37.0	23.5	29.7	35.9	22.4	28.5	34.7
		72	THC	52.1	52.1	52.1	49.6	49.6	49.6	46.8	46.8	46.8	43.9	43.9	43.9	40.8	40.8	40.8
			SHC	20.8	27.1	33.4	19.9	26.1	32.3	18.8	25.1	31.3	17.7	24.0	30.2	16.6	22.8	29.0
		76	THC	–	56.1	56.1	–	53.3	53.3	–	50.4	50.4	–	47.3	47.3	–	44.0	44.0
			SHC	–	22.4	29.0	–	21.4	28.0	–	20.4	26.9	–	19.3	25.7	–	18.2	24.6
1400 Cfm	EAT (wb)	58	THC	43.3	43.3	49.1	41.6	41.6	47.1	39.6	39.6	44.9	37.6	37.6	42.6	35.4	35.4	40.1
			SHC	37.5	43.3	49.1	36.0	41.6	47.1	34.4	39.6	44.9	32.6	37.6	42.6	30.6	35.4	40.1
		62	THC	44.5	44.5	48.9	42.3	42.3	47.7	39.9	39.9	46.3	37.7	37.7	44.4	35.4	35.4	41.7
			SHC	34.7	41.8	48.9	33.6	40.7	47.7	32.4	39.4	46.3	30.9	37.7	44.4	29.1	35.4	41.7
		67	THC	48.8	48.8	48.8	46.3	46.3	46.3	43.7	43.7	43.7	40.9	40.9	40.9	37.9	37.9	38.1
			SHC	28.3	35.4	42.5	27.2	34.4	41.5	26.2	33.3	40.4	25.0	32.2	39.3	23.8	31.0	38.1
		72	THC	53.6	53.6	53.6	50.9	50.9	50.9	48.0	48.0	48.0	45.0	45.0	45.0	41.7	41.7	41.7
			SHC	21.6	28.7	35.9	20.5	27.7	34.9	19.5	26.6	33.8	18.4	25.5	32.7	17.2	24.3	31.5
		76	THC	–	57.6	57.6	–	54.7	54.7	–	51.6	51.6	–	48.4	48.4	–	44.9	44.9
			SHC	–	23.3	30.9	–	22.3	29.8	–	21.3	28.7	–	20.1	27.5	–	19.0	26.3
1600 Cfm	EAT (wb)	58	THC	45.2	45.2	51.3	43.3	43.3	49.1	41.3	41.3	46.8	39.1	39.1	44.3	36.7	36.7	41.6
			SHC	39.2	45.2	51.3	37.5	43.3	49.1	35.8	41.3	46.8	33.9	39.1	44.3	31.8	36.7	41.6
		62	THC	46.1	46.1	50.5	43.4	43.4	51.1	41.3	41.3	48.7	39.1	39.1	46.1	36.7	36.7	43.3
			SHC	36.0	43.3	50.5	35.7	43.4	51.1	33.9	41.3	48.7	32.1	39.1	46.1	30.2	36.7	43.3
		67	THC	49.9	49.9	49.9	47.3	47.3	47.3	44.6	44.6	44.6	41.6	41.6	42.6	38.6	38.6	41.3
			SHC	29.8	37.8	45.9	28.7	36.8	44.8	27.6	35.7	43.7	26.5	34.5	42.6	25.2	33.3	41.3
		72	THC	54.7	54.7	54.7	51.9	51.9	51.9	48.9	48.9	48.9	45.7	45.7	45.7	42.4	42.4	42.4
			SHC	22.2	30.3	38.4	21.2	29.2	37.3	20.1	28.2	36.2	18.9	27.0	35.1	17.7	25.8	33.9
		76	THC	–	58.8	58.8	–	55.8	55.8	–	52.6	52.6	–	49.2	49.2	–	45.6	45.6
			SHC	–	24.2	32.6	–	23.1	31.5	–	22.1	30.3	–	20.9	29.1	–	19.7	27.9
1800 Cfm	EAT (wb)	58	THC	46.8	46.8	53.1	44.8	44.8	50.8	42.7	42.7	48.3	40.3	40.3	45.7	37.8	37.8	42.9
			SHC	40.6	46.8	53.1	38.8	44.8	50.8	37.0	42.7	48.3	34.9	40.3	45.7	32.8	37.8	42.9
		62	THC	46.9	46.9	55.2	44.8	44.8	52.8	42.7	42.7	50.3	40.4	40.4	47.6	37.9	37.9	44.6
			SHC	38.5	46.9	55.2	36.8	44.8	52.8	35.1	42.7	50.3	33.2	40.4	47.6	31.1	37.9	44.6
		67	THC	50.8	50.8	50.8	48.1	48.1	48.1	45.2	45.2	46.9	42.2	42.2	45.7	39.1	39.1	44.3
			SHC	31.2	40.2	49.1	30.1	39.1	48.0	29.0	37.9	46.9	27.8	36.7	45.7	26.6	35.4	44.3
		72	THC	55.7	55.7	55.7	52.7	52.7	52.7	49.6	49.6	49.6	46.4	46.4	46.4	42.9	42.9	42.9
			SHC	22.8	31.8	40.8	21.7	30.7	39.7	20.6	29.6	38.6	19.5	28.4	37.4	18.3	27.2	36.2
		76	THC	–	59.7	59.7	–	56.6	56.6	–	53.3	53.3	–	49.8	49.8	–	46.1	46.1
			SHC	–	25.0	34.2	–	23.9	33.1	–	22.8	31.9	–	21.6	30.7	–	20.4	29.5
2000 Cfm	EAT (wb)	58	THC	48.2	48.2	54.6	46.1	46.1	52.2	43.8	43.8	49.7	41.4	41.4	46.9	38.8	38.8	44.0
			SHC	41.8	48.2	54.6	39.9	46.1	52.2	38.0	43.8	49.7	35.9	41.4	46.9	33.6	38.8	44.0
		62	THC	48.2	48.2	56.8	46.1	46.1	54.4	43.9	43.9	51.7	41.4	41.4	48.8	38.8	38.8	45.7
			SHC	39.6	48.2	56.8	37.9	46.1	54.4	36.0	43.9	51.7	34.0	41.4	48.8	31.9	38.8	45.7
		67	THC	51.4	51.4	52.2	48.7	48.7	51.1	45.8	45.8	49.9	42.7	42.7	48.6	39.5	39.5	47.1
			SHC	32.6	42.4	52.2	31.5	41.3	51.1	30.3	40.1	49.9	29.1	38.8	48.6	27.8	37.4	47.1
		72	THC	56.4	56.4	56.4	53.4	53.4	53.4	50.2	50.2	50.2	46.9	46.9	46.9	43.3	43.3	43.3
			SHC	23.3	33.2	43.0	22.2	32.1	41.9	21.1	31.0	40.8	20.0	29.8	39.6	18.8	28.6	38.4
		76	THC	–	60.4	60.4	–	57.2	57.2	–	53.9	53.9	–	50.3	50.3	–	46.5	46.5
			SHC	–	25.7	35.7	–	24.6	34.6	–	23.5	33.5	–	22.3	32.2	–	21.1	31.0

LEGEND

– – Do not operate in this region (Points are outside SST and SDT permissible operating range)
Cfm – Cubic feet per minute (supply air)
EAT(db) – Entering air temperature (dry bulb)
EAT(wb) – Entering air temperature (wet bulb)
SHC – Sensible heat capacity
THC – Total capacity

ADVANCED PRODUCT DATA

Table 9 – COOLING CAPACITIES 1-STAGE COOLING 5 TONS

50HCQA06				AMBIENT TEMPERATURE														
				85			95			105			115			125		
				EAT (db)			EAT (db)			EAT (db)			EAT (db)			EA (db)		
				75	80	85	75	80	85	75	80	85	75	80	85	75	80	85
1500 Cfm	EAT (wb)	58	THC	53.8	53.8	60.7	51.7	51.7	58.3	49.4	49.4	55.8	46.9	46.9	53.0	44.2	44.2	49.9
			SHC	46.9	53.8	60.7	45.0	51.7	58.3	43.0	49.4	55.8	40.9	46.9	53.0	38.5	44.2	49.9
		62	THC	56.2	56.2	58.3	53.5	53.5	57.0	50.6	50.6	55.5	47.5	47.5	53.9	44.2	44.2	51.8
			SHC	42.6	50.5	58.3	41.3	49.1	57.0	39.9	47.7	55.5	38.4	46.2	53.9	36.6	44.2	51.8
		67	THC	61.7	61.7	61.7	58.7	58.7	58.7	55.5	55.5	55.5	52.0	52.0	52.0	48.2	48.2	48.2
			SHC	35.1	43.0	50.9	33.8	41.7	49.6	32.5	40.4	48.3	31.1	38.9	46.8	29.5	37.4	45.3
		72	THC	67.7	67.7	67.7	64.4	64.4	64.4	60.9	60.9	60.9	57.1	57.1	57.1	53.0	53.0	53.0
			SHC	27.4	35.3	43.3	26.1	34.1	42.0	24.8	32.7	40.7	23.4	31.3	39.2	21.9	29.8	37.7
		76	THC	–	72.7	72.7	–	69.2	69.2	–	65.4	65.4	–	61.3	61.3	–	56.9	56.9
			SHC	–	29.0	37.3	–	27.8	36.1	–	26.5	34.7	–	25.1	33.2	–	23.5	31.6
1750 Cfm	EAT (wb)	58	THC	56.7	56.7	64.0	54.4	54.4	61.4	51.9	51.9	58.6	49.2	49.2	55.6	46.2	46.2	52.2
			SHC	49.4	56.7	64.0	47.4	54.4	61.4	45.2	51.9	58.6	42.9	49.2	55.6	40.3	46.2	52.2
		62	THC	58.0	58.0	63.8	55.2	55.2	62.3	52.2	52.2	60.5	49.3	49.3	57.8	46.3	46.3	54.2
			SHC	45.9	54.8	63.8	44.5	53.4	62.3	42.9	51.7	60.5	40.8	49.3	57.8	38.3	46.3	54.2
		67	THC	63.4	63.4	63.4	60.3	60.3	60.3	56.9	56.9	56.9	53.2	53.2	53.2	49.3	49.3	49.7
			SHC	37.3	46.4	55.5	36.0	45.1	54.2	34.6	43.7	52.8	33.1	42.2	51.3	31.5	40.6	49.7
		72	THC	69.5	69.5	69.5	66.0	66.0	66.0	62.4	62.4	62.4	58.3	58.3	58.3	54.0	54.0	54.0
			SHC	28.3	37.5	46.7	27.0	36.2	45.4	25.7	34.8	44.0	24.2	33.4	42.5	22.7	31.8	41.0
		76	THC	–	74.5	74.5	–	70.9	70.9	–	66.9	66.9	–	62.6	62.6	–	58.0	58.0
			SHC	–	30.2	39.7	–	29.0	38.4	–	27.6	37.0	–	26.2	35.5	–	24.6	33.9
2000 Cfm	EAT (wb)	58	THC	59.1	59.1	66.7	56.7	56.7	64.0	54.0	54.0	61.0	51.1	51.1	57.7	48.0	48.0	54.1
			SHC	51.5	59.1	66.7	49.4	56.7	64.0	47.1	54.0	61.0	44.5	51.1	57.7	41.8	48.0	54.1
		62	THC	59.5	59.5	68.7	56.7	56.7	66.5	54.1	54.1	63.4	51.2	51.2	60.0	48.0	48.0	56.2
			SHC	48.7	58.7	68.7	47.0	56.7	66.5	44.8	54.1	63.4	42.4	51.2	60.0	39.7	48.0	56.2
		67	THC	64.7	64.7	64.7	61.5	61.5	61.5	57.9	57.9	57.9	54.1	54.1	55.6	50.1	50.1	53.9
			SHC	39.3	49.6	59.9	38.0	48.3	58.6	36.6	46.9	57.2	35.0	45.3	55.6	33.4	43.7	53.9
		72	THC	70.9	70.9	70.9	67.3	67.3	67.3	63.4	63.4	63.4	59.3	59.3	59.3	54.8	54.8	54.8
			SHC	29.2	39.5	49.9	27.9	38.2	48.6	26.5	36.8	47.2	25.0	35.3	45.7	23.4	33.8	44.1
		76	THC	–	75.9	75.9	–	72.1	72.1	–	68.0	68.0	–	63.6	63.6	–	58.8	58.8
			SHC	–	31.3	41.9	–	30.0	40.6	–	28.7	39.2	–	27.2	37.6	–	25.6	36.0
2250 Cfm	EAT (wb)	58	THC	61.2	61.2	69.1	58.6	58.6	66.1	55.8	55.8	63.0	52.7	52.7	59.5	49.4	49.4	55.7
			SHC	53.3	61.2	69.1	51.0	58.6	66.1	48.6	55.8	63.0	45.9	52.7	59.5	43.0	49.4	55.7
		62	THC	61.2	61.2	71.8	58.6	58.6	68.7	55.8	55.8	65.4	52.8	52.8	61.9	49.4	49.4	57.9
			SHC	50.7	61.2	71.8	48.6	58.6	68.7	46.2	55.8	65.4	43.7	52.8	61.9	40.9	49.4	57.9
		67	THC	65.8	65.8	65.8	62.4	62.4	62.8	58.8	58.8	61.3	54.9	54.9	59.7	50.7	50.7	57.9
			SHC	41.2	52.7	64.2	39.9	51.3	62.8	38.4	49.9	61.3	36.9	48.3	59.7	35.2	46.5	57.9
		72	THC	72.0	72.0	72.0	68.3	68.3	68.3	64.3	64.3	64.3	60.0	60.0	60.0	55.4	55.4	55.4
			SHC	30.0	41.5	53.0	28.6	40.1	51.6	27.2	38.7	50.2	25.8	37.2	48.7	24.2	35.6	47.1
		76	THC	–	77.0	77.0	–	73.1	73.1	–	68.9	68.9	–	64.3	64.3	–	59.5	59.5
			SHC	–	32.3	44.1	–	31.0	42.7	–	29.6	41.3	–	28.1	39.7	–	26.6	38.1
2500 Cfm	EAT (wb)	58	THC	62.9	62.9	71.1	60.2	60.2	68.0	57.3	57.3	64.7	54.1	54.1	61.1	50.6	50.6	57.1
			SHC	54.8	62.9	71.1	52.5	60.2	68.0	49.9	57.3	64.7	47.1	54.1	61.1	44.1	50.6	57.1
		62	THC	63.0	63.0	73.8	60.3	60.3	70.6	57.3	57.3	67.2	54.1	54.1	63.4	50.6	50.6	59.3
			SHC	52.2	63.0	73.8	49.9	60.3	70.6	47.5	57.3	67.2	44.8	54.1	63.4	41.9	50.6	59.3
		67	THC	66.6	66.6	68.2	63.2	63.2	66.8	59.5	59.5	65.2	55.5	55.5	63.5	51.3	51.3	61.5
			SHC	43.1	55.6	68.2	41.7	54.2	66.8	40.2	52.7	65.2	38.6	51.0	63.5	36.8	49.1	61.5
		72	THC	72.8	72.8	72.8	69.0	69.0	69.0	65.0	65.0	65.0	60.6	60.6	60.6	55.9	55.9	55.9
			SHC	30.7	43.3	56.0	29.4	42.0	54.6	28.0	40.6	53.2	26.5	39.1	51.7	24.9	37.5	50.1
		76	THC	–	77.9	77.9	–	73.9	73.9	–	69.5	69.5	–	64.9	64.9	–	59.9	59.9
			SHC	–	33.3	46.1	–	32.0	44.7	–	30.6	43.3	–	29.1	41.7	–	27.5	40.1

LEGEND

– – Do not operate in this region (Points are outside SST and SDT permissible operating range)
Cfm – Cubic feet per minute (supply air)
EAT(db) – Entering air temperature (dry bulb)
EAT(wb) – Entering air temperature (wet bulb)
SHC – Sensible heat capacity
THC – Total capacity

ADVANCED PRODUCT DATA

Table 10 – COOLING CAPACITIES 1-STAGE COOLING 6 TONS

50HCQA07				AMBIENT TEMPERATURE														
				85			95			105			115			125		
				EAT (db)			EAT (db)			EAT (db)			EAT (db)			EA (db)		
				75	80	85	75	80	85	75	80	85	75	80	85	75	80	85
1800 Cfm	EAT (wb)	58	THC	63.5	63.5	71.7	60.1	60.1	67.9	56.4	56.4	63.7	52.3	52.3	59.1	47.8	47.8	54
			SHC	55.2	63.5	71.7	52.3	60.1	67.9	49.1	56.4	63.7	45.5	52.3	59.1	41.6	47.8	54
		62	THC	66.5	66.5	68.9	62.1	62.1	66.9	57.4	57.4	64.6	52.4	52.4	61.4	47.9	47.9	56.2
			SHC	50.2	59.5	68.9	48.1	57.5	66.9	45.9	55.2	64.6	43.3	52.4	61.4	39.6	47.9	56.2
		67	THC	73.9	73.9	73.9	69.9	69.9	69.9	64.6	64.6	64.6	59	59	59	52.8	52.8	52.8
			SHC	40.7	50	59.4	39.2	48.7	58.1	37.2	46.6	56	35	44.5	53.9	32.7	42.1	51.6
		72	THC	78.2	78.2	78.2	76.9	76.9	76.9	73.1	73.1	73.1	67.5	67.5	67.5	61	61	61
			SHC	29.8	38.9	47.9	29.4	38.7	48	28	37.4	46.8	26.1	35.5	44.9	23.9	33.3	42.7
		76	THC	–	79.5	79.5	–	79.9	79.9	–	78.1	78.1	–	74	74	–	68.1	68.1
			SHC	–	29.8	39.7	–	29.9	39.8	–	29.3	39.1	–	27.9	37.5	–	26.1	35.5
2100 Cfm	EAT (wb)	58	THC	67.7	67.7	76.4	64	64	72.3	60.1	60.1	67.9	55.8	55.8	63	51	51	57.7
			SHC	58.9	67.7	76.4	55.7	64	72.3	52.3	60.1	67.9	48.5	55.8	63	44.4	51	57.7
		62	THC	69.2	69.2	75.6	64.7	64.7	73.5	60.2	60.2	70.5	55.8	55.8	65.5	51.1	51.1	60
			SHC	54.2	64.9	75.6	52.2	62.8	73.5	49.7	60.1	70.5	46.2	55.8	65.5	42.2	51.1	60
		67	THC	75.6	75.6	75.6	72.1	72.1	72.1	66.9	66.9	66.9	60.9	60.9	60.9	54.5	54.5	56.9
			SHC	42.8	53.4	63.9	41.8	52.6	63.3	39.9	50.7	61.6	37.6	48.5	59.3	35.3	46.1	56.9
		72	THC	78.9	78.9	78.9	78.2	78.2	78.2	75	75	75	69.6	69.6	69.6	63	63	63
			SHC	30.2	40.2	50.2	30.1	40.6	51	29.1	39.8	50.5	27.3	38.1	48.9	25.1	35.9	46.7
		76	THC	–	79.7	79.7	–	80.5	80.5	–	79.1	79.1	–	75.5	75.5	–	69.8	69.8
			SHC	–	30.7	42.3	–	30.8	42.1	–	30.3	41.4	–	29.1	40.1	–	27.4	38.3
2400 Cfm	EAT (wb)	58	THC	70.8	70.8	80	67.3	67.3	76.1	63.1	63.1	71.3	58.6	58.6	66.2	53.7	53.7	60.7
			SHC	61.6	70.8	80	58.6	67.3	76.1	54.9	63.1	71.3	51	58.6	66.2	46.7	53.7	60.7
		62	THC	71.3	71.3	81.4	67.4	67.4	79	63.1	63.1	74.1	58.7	58.7	68.9	53.7	53.7	63.1
			SHC	57.7	69.6	81.4	55.7	67.4	79	52.2	63.1	74.1	48.5	58.7	68.9	44.4	53.7	63.1
		67	THC	76.7	76.7	76.7	73.7	73.7	73.7	68.5	68.5	68.5	62.4	62.4	64.4	56	56	62
			SHC	44.7	56.2	67.8	44.1	56.1	68.1	42.3	54.5	66.7	40.1	52.2	64.4	37.8	49.9	62
		72	THC	79.3	79.3	79.3	79	79	79	76.3	76.3	76.3	71.1	71.1	71.1	64.4	64.4	64.4
			SHC	30.5	41.3	52.1	30.7	42.1	53.6	29.9	41.8	53.8	28.3	40.4	52.5	26.2	38.3	50.5
		76	THC	–	80	80	–	80.8	80.8	–	79.8	79.8	–	76.5	76.5	–	71	71
			SHC	–	31.2	43.5	–	31.4	43.6	–	31.1	43.3	–	30.2	42.4	–	28.6	40.8
2700 Cfm	EAT (wb)	58	THC	73.3	73.3	82.8	70	70	79.1	65.8	65.8	74.3	61	61	68.9	55.9	55.9	63.2
			SHC	63.7	73.3	82.8	60.9	70	79.1	57.2	65.8	74.3	53.1	61	68.9	48.7	55.9	63.2
		62	THC	73.3	73.3	85.8	70.1	70.1	82.3	65.8	65.8	77.3	61.1	61.1	71.7	56	56	65.7
			SHC	60.5	73.2	85.8	58	70.1	82.3	54.4	65.8	77.3	50.5	61.1	71.7	46.3	56	65.7
		67	THC	77.5	77.5	77.5	74.9	74.9	74.9	70	70	71.5	63.7	63.7	69.2	57.2	57.2	66.6
			SHC	46.1	58.6	71.1	46.1	59.3	72.5	44.7	58.1	71.5	42.4	55.8	69.2	40	53.3	66.6
		72	THC	79.6	79.6	79.6	79.5	79.5	79.5	77.2	77.2	77.2	72.3	72.3	72.3	65.6	65.6	65.6
			SHC	30.8	42.3	53.7	31.1	43.4	55.8	30.7	43.7	56.7	29.2	42.5	55.9	27.2	40.6	54.1
		76	THC	–	80.1	80.1	–	81.1	81.1	–	80.3	80.3	–	77.1	77.1	–	71.9	71.9
			SHC	–	31.6	44.5	–	32	44.9	–	31.8	44.9	–	31	44.3	–	29.6	43
3000 Cfm	EAT (wb)	58	THC	75	75	84.8	72.2	72.2	81.6	68.1	68.1	76.9	63.1	63.1	71.2	57.8	57.8	65.3
			SHC	65.3	75	84.8	62.9	72.2	81.6	59.2	68.1	76.9	54.9	63.1	71.2	50.3	57.8	65.3
		62	THC	75.1	75.1	88.1	72.3	72.3	84.8	68.1	68.1	79.9	63.1	63.1	74.1	57.9	57.9	67.9
			SHC	62.1	75.1	88.1	59.8	72.3	84.8	56.3	68.1	79.9	52.2	63.1	74.1	47.8	57.9	67.9
		67	THC	77.9	77.9	77.9	75.9	75.9	76.5	71.1	71.1	76	65	65	73.8	58.4	58.4	70.9
			SHC	47.3	60.6	73.8	48	62.2	76.5	46.8	61.4	76	44.6	59.2	73.8	42.1	56.5	70.9
		72	THC	79.3	79.3	79.3	79.9	79.9	79.9	77.9	77.9	77.9	73.2	73.2	73.2	66.5	66.5	66.5
			SHC	30.9	42.8	54.6	31.6	44.6	57.7	31.3	45.3	59.3	30	44.5	59	28.1	42.7	57.4
		76	THC	–	80.1	80.1	–	81.2	81.2	–	80.6	80.6	–	77.6	77.6	–	72.5	72.5
			SHC	–	32	45.4	–	32.4	46	–	32.5	46.4	–	31.8	46.1	–	30.6	45.1

LEGEND

– – Do not operate in this region (Points are outside SST and SDT permissible operating range)
Cfm – Cubic feet per minute (supply air)
EAT(db) – Entering air temperature (dry bulb)
EAT(wb) – Entering air temperature (wet bulb)
SHC – Sensible heat capacity
THC – Total capacity

ADVANCED PRODUCT DATA

Table 11 – COOLING CAPACITIES 2-STAGE COOLING 7.5 TONS

50HCQD08				AMBIENT TEMPERATURE														
				85			95			105			115			125		
				EAT (db)			EAT (db)			EAT (db)			EAT (db)			EA (db)		
				75	80	85	75	80	85	75	80	85	75	80	85	75	80	85
2250Cfm	EAT (wb)	58	THC	81.1	81.1	92.1	76.4	76.4	86.8	73.0	73.0	82.9	69.3	69.3	78.7	65.2	65.2	74.1
			SHC	70.1	81.1	92.1	66.0	76.4	86.8	63.1	73.0	82.9	59.8	69.3	78.7	56.4	65.2	74.1
		62	THC	86.2	86.2	86.2	80.1	80.1	83.0	75.6	75.6	80.9	70.8	70.8	78.6	65.9	65.9	76.1
			SHC	62.5	74.2	85.9	59.7	71.3	83.0	57.6	69.3	80.9	55.4	67.0	78.6	53	64.5	76.1
		67	THC	94.3	94.3	94.3	87.6	87.6	87.6	82.8	82.8	82.8	77.6	77.6	77.6	72.1	72.1	72.1
			SHC	51.3	63.0	74.6	48.5	60.1	71.8	46.5	58.1	69.8	44.4	56.0	67.7	42.2	53.8	65.5
		72	THC	102.9	102.9	102.9	95.6	95.6	95.6	90.3	90.3	90.3	84.7	84.7	84.7	78.7	78.7	78.7
			SHC	39.6	51.4	63.1	36.9	48.6	60.3	34.9	46.6	58.3	32.9	44.5	56.2	30.7	42.4	54.1
		76	THC	–	109.9	109.9	–	102.1	102.1	–	96.4	96.4	–	90.5	90.5	–	84.1	84.1
			SHC	–	41.8	54.2	–	39.1	51.4	–	37.2	49.4	–	35.2	47.2	–	33.1	45
2625 Cfm	EAT (wb)	58	THC	85.7	85.7	97.3	80.6	80.6	91.5	76.9	76.9	87.3	72.8	72.8	82.7	68.5	68.5	77.8
			SHC	74.0	85.7	97.3	69.6	80.6	91.5	66.4	76.9	87.3	62.9	72.8	82.7	59.2	68.5	77.8
		62	THC	89.0	89.0	94.2	82.6	82.6	91.1	78.0	78.0	88.7	73.3	73.3	85.3	68.5	68.5	81
			SHC	67.3	80.7	94.2	64.3	77.7	91.1	62.1	75.4	88.7	59.3	72.3	85.3	56.1	68.5	81
		67	THC	97.2	97.2	97.2	90.1	90.1	90.1	85.0	85.0	85.0	79.6	79.6	79.6	73.8	73.8	73.8
			SHC	54.3	67.8	81.2	51.4	64.9	78.3	49.4	62.8	76.3	47.3	60.7	74.1	45	58.5	71.9
		72	THC	105.8	105.8	105.8	98.1	98.1	98.1	92.6	92.6	92.6	86.7	86.7	86.7	80.5	80.5	80.5
			SHC	40.9	54.4	67.9	38.1	51.5	65.0	36.1	49.5	63.0	34.0	47.4	60.9	31.8	45.3	58.7
		76	THC	–	112.7	112.7	–	104.5	104.5	–	98.6	98.6	–	92.4	92.4	–	85.8	85.8
			SHC	–	43.5	57.6	–	40.7	54.6	–	38.7	52.5	–	36.7	50.4	–	34.5	48.1
3000 Cfm	EAT (wb)	58	THC	89.5	89.5	101.6	84.1	84.1	95.5	80.1	80.1	90.9	75.7	75.7	86.0	71.2	71.2	80.8
			SHC	77.3	89.5	101.6	72.6	84.1	95.5	69.2	80.1	90.9	65.5	75.7	86.0	61.5	71.2	80.8
		62	THC	91.3	91.3	101.9	84.8	84.8	97.7	80.3	80.3	94.3	75.8	75.8	89.5	71.2	71.2	84.1
			SHC	71.7	86.8	101.9	68.2	83.0	97.7	65.5	79.9	94.3	62.1	75.8	89.5	58.3	71.2	84.1
		67	THC	99.5	99.5	99.5	92.1	92.1	92.1	86.8	86.8	86.8	81.1	81.1	81.1	75.1	75.1	78.2
			SHC	57.2	72.4	87.5	54.2	69.4	84.6	52.2	67.4	82.6	50.0	65.2	80.4	47.8	63	78.2
		72	THC	108.1	108.1	108.1	100.0	100.0	100.0	94.3	94.3	94.3	88.2	88.2	88.2	81.8	81.8	81.8
			SHC	42.0	57.2	72.4	39.1	54.3	69.5	37.1	52.3	67.4	35.0	50.2	65.3	32.9	48	63.1
		76	THC	–	114.8	114.8	–	106.3	106.3	–	100.3	100.3	–	93.8	93.8	–	87	87
			SHC	–	44.9	60.6	–	42.0	57.6	–	40.1	55.5	–	38.0	53.3	–	35.8	51
3375 Cfm	EAT (wb)	58	THC	92.8	92.8	105.4	87.0	87.0	98.8	82.8	82.8	94.0	78.2	78.2	88.9	73.4	73.4	83.4
			SHC	80.2	92.8	105.4	75.2	87.0	98.8	71.5	82.8	94.0	67.6	78.2	88.9	63.4	73.4	83.4
		62	THC	93.6	93.6	108.0	87.1	87.1	102.8	82.8	82.8	97.8	78.3	78.3	92.5	73.5	73.5	86.8
			SHC	75.3	91.6	108.0	71.3	87.1	102.8	67.9	82.8	97.8	64.1	78.3	92.5	60.1	73.5	86.8
		67	THC	101.3	101.3	101.3	93.6	93.6	93.6	88.1	88.1	88.6	82.3	82.3	86.4	76.2	76.2	84
			SHC	59.9	76.8	93.6	56.9	73.8	90.7	54.8	71.7	88.6	52.6	69.5	86.4	50.3	67.2	84
		72	THC	109.8	109.8	109.8	101.5	101.5	101.5	95.6	95.6	95.6	89.3	89.3	89.3	82.8	82.8	82.8
			SHC	43.0	59.9	76.7	40.1	56.9	73.8	38.1	54.9	71.7	36.0	52.8	69.6	33.8	50.6	67.4
		76	THC	–	116.4	116.4	–	107.6	107.6	–	101.4	101.4	–	94.8	94.8	–	87.9	87.9
			SHC	–	46.1	63.3	–	43.2	60.2	–	41.2	58.1	–	39.1	55.9	–	37	53.6
3750 Cfm	EAT (wb)	58	THC	95.6	95.6	108.6	89.5	89.5	101.7	85.1	85.1	96.7	80.4	80.4	91.3	75.3	75.3	85.5
			SHC	82.6	95.6	108.6	77.4	89.5	101.7	73.6	85.1	96.7	69.4	80.4	91.3	65.1	75.3	85.5
		62	THC	95.7	95.7	113.0	89.6	89.6	105.8	85.2	85.2	100.6	80.4	80.4	95.0	75.4	75.4	89
			SHC	78.3	95.7	113.0	73.4	89.6	105.8	69.7	85.2	100.6	65.8	80.4	95.0	61.7	75.4	89
		67	THC	102.7	102.7	102.7	94.8	94.8	96.6	89.2	89.2	94.4	83.3	83.3	92.1	77.1	77.1	89.6
			SHC	62.5	81.0	99.6	59.5	78.0	96.6	57.4	75.9	94.4	55.1	73.6	92.1	52.8	71.2	89.6
		72	THC	111.3	111.3	111.3	102.8	102.8	102.8	96.7	96.7	96.7	90.3	90.3	90.3	83.6	83.6	83.6
			SHC	44.0	62.4	80.8	41.1	59.5	77.9	39.0	57.4	75.8	36.9	55.3	73.7	34.7	53.1	71.5
		76	THC	–	117.5	117.5	–	108.6	108.6	–	102.3	102.3	–	95.6	95.6	–	88.6	88.6
			SHC	–	47.2	65.7	–	44.3	62.6	–	42.3	60.5	–	40.2	58.2	–	38	55.9

ADVANCED PRODUCT DATA

LEGEND

– – Do not operate in this region (Points are outside SST and SDT permissible operating range)
Cfm – Cubic feet per minute (supply air)
EAT(db) – Entering air temperature (dry bulb)
EAT(wb) – Entering air temperature (wet bulb)
SHC – Sensible heat capacity
THC – Total capacity

Table 12 – COOLING CAPACITIES 2-STAGE COOLING 8.5 TONS

50HCQD09				AMBIENT TEMPERATURE														
				85			95			105			115			125		
				EAT (db)			EAT (db)			EAT (db)			EAT (db)			EA (db)		
				75	80	85	75	80	85	75	80	85	75	80	85	75	80	85
2550 Cfm	EAT (wb)	58	THC	85.8	85.8	97.8	80.9	80.9	91.8	75.7	75.7	85.9	70.2	70.2	79.7	64.4	64.4	73.1
			SHC	73.9	85.8	97.8	70	80.9	91.8	65.5	75.7	85.9	60.7	70.2	79.7	55.7	64.4	73.1
		62	THC	90.4	90.4	94.5	83.8	83.8	91.4	76.8	76.8	88	70.5	70.5	82.7	64.5	64.5	76.1
			SHC	67.8	81.1	94.5	64.8	78.1	91.4	61.6	74.8	88	57.6	70.1	82.7	52.8	64.5	76.1
		67	THC	101.6	101.6	101.6	95	95	95	87.4	87.4	87.4	79.3	79.3	79.3	71	71	71
			SHC	55.5	68.7	81.9	52.9	66.3	79.7	49.9	63.3	76.7	46.9	60.3	73.7	43.8	57.2	70.6
		72	THC	109.3	109.3	109.3	106	106	106	99.6	99.6	99.6	91.4	91.4	91.4	82.7	82.7	82.7
			SHC	41.1	54.1	67.2	39.9	53.3	66.6	37.7	51.1	64.6	34.9	48.3	61.7	32	45.4	58.8
		76	THC	–	114.5	114.5	–	111.2	111.2	–	107.7	107.7	–	101	101	–	92.6	92.6
			SHC	–	42.6	56.7	–	41.6	55.6	–	40.5	54.5	–	38.3	51.9	–	35.6	49.2
2975 Cfm	EAT (wb)	58	THC	91.8	91.8	104.5	86.4	86.4	98	80.7	80.7	91.6	74.7	74.7	84.8	68.6	68.6	77.8
			SHC	79.1	91.8	104.5	74.7	86.4	98	69.8	80.7	91.6	64.6	74.7	84.8	59.3	68.6	77.8
		62	THC	94.4	94.4	104.4	87.5	87.5	100.5	81	81	95.1	74.8	74.8	88.3	68.7	68.7	81
			SHC	73.8	89.1	104.4	70.3	85.4	100.5	66.1	80.6	95.1	61.3	74.8	88.3	56.3	68.7	81
		67	THC	104.3	104.3	104.3	98.6	98.6	98.6	90.6	90.6	90.6	82.1	82.1	82.1	73.4	73.4	78.4
			SHC	58.7	73.7	88.6	56.8	72.3	87.8	53.8	69.3	84.8	50.7	66.1	81.6	47.5	62.9	78.4
		72	THC	111.3	111.3	111.3	108	108	108	102.7	102.7	102.7	94.5	94.5	94.5	85.5	85.5	85.5
			SHC	42.2	56.7	71.3	41	56.1	71.3	39.3	54.8	70.3	36.6	52.1	67.6	33.7	49.2	64.7
		76	THC	–	116.3	116.3	–	112.7	112.7	–	109.2	109.2	–	103.5	103.5	–	95.4	95.4
			SHC	–	44.3	60.6	–	43.1	59	–	41.9	57.7	–	40.2	56	–	37.7	53.4
3400 Cfm	EAT (wb)	58	THC	96.6	96.6	109.9	91.1	91.1	103.4	85.1	85.1	96.6	78.7	78.7	89.3	72.1	72.1	81.8
			SHC	83.3	96.6	109.9	78.8	91.1	103.4	73.6	85.1	96.6	68.1	78.7	89.3	62.4	72.1	81.8
		62	THC	97.7	97.7	112.8	91.7	91.7	106.8	85.3	85.3	100.7	78.8	78.8	93	72.2	72.2	85.2
			SHC	78.6	95.7	112.8	74.4	90.6	106.8	69.9	85.3	100.7	64.6	78.8	93	59.2	72.2	85.2
		67	THC	106	106	106	101.2	101.2	101.2	93	93	93	84.4	84.4	89.2	75.5	75.5	85.8
			SHC	61.6	78.1	94.7	60.2	77.7	95.1	57.4	74.9	92.4	54.2	71.7	89.2	50.9	68.4	85.8
		72	THC	112.7	112.7	112.7	109.3	109.3	109.3	104.8	104.8	104.8	96.8	96.8	96.8	87.7	87.7	87.7
			SHC	43.1	59	75	41.9	58.5	75.2	40.7	58	75.4	38.1	55.7	73.2	35.2	52.8	70.4
		76	THC	–	117.6	117.6	–	113.9	113.9	–	110.2	110.2	–	105.2	105.2	–	97.2	97.2
			SHC	–	45.4	63	–	44.2	61.5	–	43.1	60.5	–	41.8	59.4	–	39.5	57.2
3825 Cfm	EAT (wb)	58	THC	100.5	100.5	114.2	95.1	95.1	107.9	88.9	88.9	100.8	82.2	82.2	93.3	75.3	75.3	85.5
			SHC	86.7	100.5	114.2	82.3	95.1	107.9	76.9	88.9	100.8	71.1	82.2	93.3	65.2	75.3	85.5
		62	THC	100.6	100.6	119	95.4	95.4	112.5	89	89	105	82.3	82.3	97.1	75.4	75.4	89
			SHC	82.3	100.6	119	78.2	95.4	112.5	72.9	89	105	67.5	82.3	97.1	61.8	75.4	89
		67	THC	107.3	107.3	107.3	103.1	103.1	103.1	95.1	95.1	99.8	86.3	86.3	96.4	77.3	77.3	92.6
			SHC	64.1	82.2	100.2	63.4	82.7	102	60.8	80.3	99.8	57.6	77	96.4	54.2	73.4	92.6
		72	THC	113.8	113.8	113.8	110.3	110.3	110.3	106.3	106.3	106.3	98.5	98.5	98.5	89.3	89.3	89.3
			SHC	44	61.2	78.8	42.7	60.8	78.9	41.8	61	80.1	39.5	59	78.5	36.6	56.2	75.7
		76	THC	–	118.6	118.6	–	114.8	114.8	–	110.9	110.9	–	106.3	106.3	–	98.5	98.5
			SHC	–	46.4	65.1	–	45.2	63.9	–	44.2	63	–	43.2	62.5	–	41.1	60.7
4250 Cfm	EAT (wb)	58	THC	103.2	103.2	117.2	98.5	98.5	111.8	92.2	92.2	104.6	85.3	85.3	96.8	78.1	78.1	88.7
			SHC	89.1	103.2	117.2	85.2	98.5	111.8	79.7	92.2	104.6	73.8	85.3	96.8	67.6	78.1	88.7
		62	THC	103.2	103.2	121.8	98.6	98.6	116.3	92.3	92.3	108.9	85.4	85.4	100.7	78.2	78.2	92.3
			SHC	84.6	103.2	121.8	80.8	98.6	116.3	75.6	92.3	108.9	70	85.4	100.7	64.1	78.2	92.3
		67	THC	108.3	108.3	108.3	104.5	104.5	108.3	96.8	96.8	106.7	88	88	103.2	79.3	79.3	97.6
			SHC	66.5	86	105.5	66.3	87.3	108.3	64	85.3	106.7	60.7	82	103.2	56.6	77.1	97.6
		72	THC	114.7	114.7	114.7	111.1	111.1	111.1	107.3	107.3	107.3	99.9	99.9	99.9	90.6	90.6	90.6
			SHC	44.8	63.1	81.5	43.5	62.9	82.3	42.8	63.5	84.2	40.7	62.1	83.5	37.9	59.4	81
		76	THC	–	119.4	119.4	–	115.5	115.5	–	111.4	111.4	–	107.1	107.1	–	99.5	99.5
			SHC	–	47.3	67	–	46.2	66	–	45.2	65.3	–	44.5	65.3	–	42.6	63.9

LEGEND

– – Do not operate in this region (Points are outside SST and SDT permissible operating range)
Cfm – Cubic feet per minute (supply air)
EAT(db) – Entering air temperature (dry bulb)
EAT(wb) – Entering air temperature (wet bulb)
SHC – Sensible heat capacity
THC – Total capacity

ADVANCED PRODUCT DATA

Table 13 – HEATING CAPACITIES **3 TONS**

50HCQA04											
RETURN AIR (°F db)	CFM (STANDARD AIR)		TEMPERATURE AIR ENTERING OUTDOOR COIL (°F db AT 70% RH)								
			–10	0	10	17	30	40	47	50	60
55	900	Capacity		13.3	17.2	20.0	26.0	31.3	35.6	37.0	42.7
		Int. Cap.		12.3	15.8	18.3	22.8	31.3	35.6	37.0	42.7
		kW		1.9	2.0	2.1	2.2	2.4	2.6	2.7	2.9
	1200	Capacity		13.8	17.8	20.8	27.0	32.8	36.9	38.3	44.1
		Int. Cap.		12.7	16.3	18.9	23.6	32.8	36.9	38.3	44.1
		kW		1.8	1.9	2.0	2.1	2.3	2.4	2.4	2.6
	1500	Capacity			18.7	21.8	28.2	34.0	38.1	39.4	45.1
		Int. Cap.			17.2	19.8	24.7	34.0	38.1	39.4	45.1
		kW			2.0	2.1	2.2	2.4	2.4	2.5	2.6
70	900	Capacity	7.5	11.0	14.9	17.8	23.6	28.5	32.7	34.2	40.4
		Int. Cap.	6.9	10.2	13.7	16.2	20.7	28.5	32.7	34.2	40.4
		kW	2.1	2.2	2.3	2.4	2.6	2.7	2.9	3.0	3.3
	1200	Capacity	7.9	11.6	15.6	18.6	24.7	29.9	34.6	36.0	41.9
		Int. Cap.	7.3	10.7	14.3	16.9	21.6	29.9	34.6	36.0	41.9
		kW	2.0	2.1	2.2	2.3	2.4	2.6	2.8	2.8	3.0
	1500	Capacity	8.7	12.4	16.5	19.6	25.8	31.3	35.9	37.3	43.1
		Int. Cap.	8.0	11.4	15.1	17.8	22.6	31.3	35.9	37.3	43.1
		kW	2.2	2.2	2.3	2.4	2.5	2.6	2.8	2.8	3.0
80	900	Capacity	5.7	9.3	13.2	16.1	21.9	26.8	30.5	32.1	38.4
		Int. Cap.	5.3	8.5	12.1	14.7	19.2	26.8	30.5	32.1	38.4
		kW	2.3	2.4	2.5	2.6	2.8	3.0	3.2	3.2	3.6
	1200	Capacity	6.1	9.8	13.9	16.9	22.9	28.1	32.3	33.9	40.3
		Int. Cap.	5.6	9.0	12.7	15.4	20.1	28.1	32.3	33.9	40.3
		kW	2.2	2.3	2.4	2.5	2.7	2.8	3.0	3.1	3.3
	1500	Capacity	6.8	10.6	14.8	17.9	24.1	29.4	34.0	35.6	41.6
		Int. Cap.	6.3	9.8	13.6	16.3	21.1	29.4	34.0	35.6	41.6
		kW	2.4	2.5	2.5	2.6	2.7	2.9	3.0	3.1	3.3

– Indicates operation not permissible

LEGEND

Capacity – Instantaneous Capacity (1000 Btuh) includes indoor fan motor heat @AHRI static conditions

Int. Cap. – Integrated Capacity is Instantaneous Capacity minus the effects of frost on the outdoor coil and the heat required to defrost

RH – Relative Humidity

db – Dry Bulb

ADVANCED PRODUCT DATA

Table 14 – HEATING CAPACITIES **4 TONS**

50HCQA05											
RETURN AIR (°F db)	CFM (STANDARD AIR)		TEMPERATURE AIR ENTERING OUTDOOR COIL (°F db AT 70% RH)								
			–10	0	10	17	30	40	47	50	60
55	1200	Capacity		18.5	23.8	27.7	35.3	41.9	47.6	49.3	56.5
		Int. Cap.		17.1	21.8	25.2	30.9	41.9	47.6	49.3	56.5
		kW		2.6	2.7	2.8	3.1	3.3	3.6	3.6	3.9
	1600	Capacity		18.8	24.3	28.4	36.1	43.6	48.7	50.4	57.4
		Int. Cap.		17.3	22.3	25.9	31.6	43.6	48.7	50.4	57.4
		kW		2.5	2.6	2.6	2.8	3.1	3.2	3.3	3.5
	2000	Capacity		19.8	25.3	29.7	37.5	44.9	49.8	51.4	58.0
		Int. Cap.		18.2	23.2	27.1	32.9	44.9	49.8	51.4	58.0
		kW		2.6	2.7	2.8	2.9	3.2	3.3	3.3	3.5
70	1200	Capacity	10.9	16.2	21.4	25.2	32.8	38.9	44.0	46.0	54.0
		Int. Cap.	10.1	14.9	19.7	23.0	28.7	38.9	44.0	46.0	54.0
		kW	2.8	2.9	3.1	3.2	3.5	3.7	4.0	4.1	4.5
	1600	Capacity	11.2	16.6	22.0	25.9	34.0	40.0	46.1	48.0	55.2
		Int. Cap.	10.3	15.3	20.2	23.6	29.8	40.0	46.1	48.0	55.2
		kW	2.7	2.8	2.9	3.0	3.2	3.4	3.7	3.8	4.0
	2000	Capacity	12.1	17.7	23.2	27.1	35.2	41.8	47.7	49.4	56.2
		Int. Cap.	11.2	16.2	21.2	24.7	30.9	41.8	47.7	49.4	56.2
		kW	2.9	2.9	3.0	3.1	3.3	3.5	3.7	3.8	4.0
80	1200	Capacity	8.9	14.3	19.6	23.3	30.8	37.4	41.8	43.6	51.8
		Int. Cap.	8.2	13.1	18.0	21.3	27.0	37.4	41.8	43.6	51.8
		kW	3.0	3.2	3.3	3.5	3.8	4.1	4.3	4.4	4.8
	1600	Capacity	9.2	14.7	20.2	24.1	31.9	38.4	43.4	45.5	53.5
		Int. Cap.	8.5	13.6	18.6	22.0	28.0	38.4	43.4	45.5	53.5
		kW	2.9	3.0	3.2	3.3	3.5	3.8	4.0	4.1	4.4
	2000	Capacity	10.1	15.8	21.4	25.3	33.4	39.8	45.4	47.4	54.7
		Int. Cap.	9.4	14.5	19.6	23.1	29.2	39.8	45.4	47.4	54.7
		kW	3.1	3.2	3.3	3.4	3.6	3.8	4.0	4.1	4.4

– Indicates operation not permissible

LEGEND

Capacity – Instantaneous Capacity (1000 Btuh) includes indoor fan motor heat @AHRI static conditions

Int. Cap. – Integrated Capacity is Instantaneous Capacity minus the effects of frost on the outdoor coil and the heat required to defrost

RH – Relative Humidity

db – Dry Bulb

ADVANCED PRODUCT DATA

Table 15 – HEATING CAPACITY **5 TONS**

50HCQA06											
RETURN AIR (°F db)	CFM (STANDARD AIR)		TEMPERATURE AIR ENTERING OUTDOOR COIL (°F db AT 70% RH)								
			–10	0	10	17	30	40	47	50	60
55	1500	Capacity		22.0	28.5	33.3	43.5	51.4	58.0	60.1	68.6
		Int. Cap.		20.3	26.1	30.4	38.1	51.4	58.0	60.1	68.6
		kW		2.9	3.1	3.2	3.5	3.7	3.8	3.9	4.1
	2000	Capacity		23.9	30.5	35.5	45.7	54.1	60.4	62.3	69.9
		Int. Cap.		22.0	28.0	32.4	40.1	54.1	60.4	62.3	69.9
		kW		3.2	3.3	3.4	3.6	3.8	3.9	3.9	4.1
	2500	Capacity		25.0	31.7	36.9	47.1	55.2	60.7	62.3	68.8
		Int. Cap.		23.0	29.1	33.6	41.3	55.2	60.7	62.3	68.8
		kW		3.3	3.4	3.5	3.7	3.8	3.9	3.9	4.0
70	1500	Capacity		18.9	25.3	30.1	40.1	48.4	54.8	56.8	65.4
		Int. Cap.		17.4	23.3	27.5	35.2	48.4	54.8	56.8	65.4
		kW		3.4	3.5	3.6	3.9	4.2	4.4	4.5	4.7
	2000	Capacity		20.7	27.4	32.3	43.0	50.9	57.4	59.3	67.4
		Int. Cap.		19.1	25.1	29.4	37.7	50.9	57.4	59.3	67.4
		kW		3.6	3.7	3.8	4.1	4.3	4.4	4.4	4.6
	2500	Capacity		21.9	28.6	33.6	44.4	52.5	58.5	60.3	67.3
		Int. Cap.		20.1	26.3	30.7	38.9	52.5	58.5	60.3	67.3
		kW		3.7	3.8	3.9	4.1	4.3	4.4	4.4	4.6
80	1500	Capacity	10.3	16.5	23.1	27.8	37.4	46.2	52.4	54.7	63.2
		Int. Cap.	9.5	15.2	21.2	25.4	32.8	46.2	52.4	54.7	63.2
		kW	3.5	3.7	3.9	4.0	4.3	4.6	4.8	4.9	5.2
	2000	Capacity	12.0	18.4	25.1	30.0	40.1	48.9	55.2	57.4	65.4
		Int. Cap.	11.1	16.9	23.0	27.4	35.2	48.9	55.2	57.4	65.4
		kW	3.8	3.9	4.1	4.2	4.4	4.6	4.8	4.9	5.1
	2500	Capacity	13.0	19.5	26.3	31.4	41.9	50.5	56.6	58.4	65.7
		Int. Cap.	12.0	18.0	24.2	28.6	36.7	50.5	56.6	58.4	65.7
		kW	3.9	4.0	4.2	4.3	4.5	4.7	4.8	4.8	5.0

▨ – Indicates operation not permissible

LEGEND

Capacity – Instantaneous Capacity (1000 Btuh) includes indoor fan motor heat @AHRI static conditions

Int. Cap. – Integrated Capacity is Instantaneous Capacity minus the effects of frost on the outdoor coil and the heat required to defrost

RH – Relative Humidity

db – Dry Bulb

ADVANCED PRODUCT DATA

Table 16 – HEATING CAPACITY **6 TONS**

50HCQA07											
RETURN AIR (°F db)	CFM (STANDARD AIR)		TEMPERATURE AIR ENTERING OUTDOOR COIL (°F db AT 70% RH)								
			–10	0	10	17	30	40	47	50	60
55	900	Capacity	20.5	28.2	36.0	41.6	52.8	62.7	71.0	73.5	83.8
		Int. Cap.	19.0	25.9	33.0	38.0	46.3	62.7	71.0	73.5	83.8
		kW	4.0	4.2	4.4	4.5	4.7	5.0	5.2	5.3	5.5
	1200	Capacity		29.0	37.0	42.8	54.4	65.4	73.0	75.4	86.1
		Int. Cap.		26.7	34.0	39.1	47.7	65.4	73.0	75.4	86.1
		kW		4.1	4.2	4.3	4.5	4.8	4.9	4.9	5.1
	1500	Capacity		29.5	37.6	43.5	55.4	66.4	73.9	76.4	87.2
		Int. Cap.		27.1	34.5	39.7	48.5	66.4	73.9	76.4	87.2
		kW		4.0	4.1	4.2	4.4	4.6	4.7	4.7	4.9
70	900	Capacity	15.8	23.6	31.6	37.3	48.5	57.7	65.5	68.5	79.7
		Int. Cap.	14.6	21.7	29.0	34.0	42.5	57.7	65.5	68.5	79.7
		kW	4.5	4.7	4.9	5.0	5.3	5.5	5.7	5.8	6.1
	1200	Capacity	16.4	24.6	32.8	38.7	50.2	60.1	68.9	71.7	82.3
		Int. Cap.	15.1	22.6	30.1	35.3	44.0	60.1	68.9	71.7	82.3
		kW	4.4	4.6	4.8	4.9	5.1	5.2	5.5	5.5	5.7
	1500	Capacity	16.8	25.1	33.5	39.5	51.3	61.6	70.5	73.0	83.6
		Int. Cap.	15.5	23.1	30.8	36.1	44.9	61.6	70.5	73.0	83.6
		kW	4.4	4.6	4.7	4.8	4.9	5.1	5.3	5.3	5.5
80	900	Capacity	11.9	20.0	28.1	33.9	45.2	54.3	61.5	64.5	76.1
		Int. Cap.	11.0	18.4	25.8	30.9	39.6	54.3	61.5	64.5	76.1
		kW	4.8	5.0	5.3	5.4	5.7	5.9	6.1	6.2	6.5
	1200	Capacity	12.5	20.9	29.3	35.4	47.0	56.7	64.6	67.7	79.4
		Int. Cap.	11.5	19.2	26.9	32.3	41.2	56.7	64.6	67.7	79.4
		kW	4.8	5.0	5.1	5.3	5.5	5.6	5.8	5.9	6.1
	1500	Capacity	12.8	21.4	30.1	36.2	48.1	57.9	66.5	69.6	80.9
		Int. Cap.	11.8	19.7	27.6	33.0	42.1	57.9	66.5	69.6	80.9
		kW	4.8	4.9	5.1	5.2	5.3	5.5	5.6	5.7	5.9

– Indicates operation not permissible

– Indicates standard rating point

LEGEND

Capacity – Instantaneous Capacity (1000 Btuh) includes indoor fan motor heat @AHRI static conditions

Int. Cap. – Integrated Capacity is Instantaneous Capacity minus the effects of frost on the outdoor coil and the heat required to defrost

RH – Relative Humidity

db – Dry Bulb

ADVANCED PRODUCT DATA

Table 17 – HEATING CAPACITY **7.5 TONS**

50HCQD08											
RETURN AIR (°F db)	CFM (STANDARD AIR)		TEMPERATURE AIR ENTERING OUTDOOR COIL (°F db AT 70% RH)								
			–10	0	10	17	30	40	47	50	60
55	2250	Capacity	24.3	33.6	43.4	50.6	66.3	78.0	87.4	90.4	102.6
		Int. Cap.	22.4	30.9	39.8	46.2	58.1	78.0	87.4	90.4	102.6
		kW	4.8	5.0	5.2	5.4	5.8	6.1	6.3	6.4	6.7
	3000	Capacity	24.7	34.2	44.3	51.8	67.8	80.2	89.6	92.5	104.6
		Int. Cap.	22.8	31.5	40.7	47.3	59.4	80.2	89.6	92.5	104.6
		kW	4.7	4.9	5.0	5.1	5.4	5.7	5.9	5.9	6.2
	3750	Capacity	24.9	34.6	44.9	52.6	68.7	81.3	90.4	93.1	104.3
		Int. Cap.	23.1	31.9	41.2	48.0	60.2	81.3	90.4	93.1	104.3
		kW	4.7	4.8	4.9	5.0	5.3	5.5	5.6	5.6	5.8
70	2250	Capacity	20.3	29.6	39.3	46.5	60.8	73.8	82.7	85.9	98.3
		Int. Cap.	18.7	27.2	36.1	42.4	53.3	73.8	82.7	85.9	98.3
		kW	5.5	5.7	5.9	6.1	6.5	6.9	7.2	7.3	7.7
	3000	Capacity	20.8	30.4	40.5	47.9	63.4	75.9	85.4	88.5	100.6
		Int. Cap.	19.3	28.0	37.2	43.6	55.6	75.9	85.4	88.5	100.6
		kW	5.4	5.6	5.8	5.9	6.2	6.5	6.7	6.7	7.0
	3750	Capacity	21.2	31.0	41.2	48.7	64.8	77.2	86.8	89.8	101.4
		Int. Cap.	19.6	28.5	37.8	44.4	56.7	77.2	86.8	89.8	101.4
		kW	5.4	5.5	5.6	5.7	6.0	6.2	6.4	6.4	6.6
80	2250	Capacity	16.8	26.2	36.0	43.2	57.2	70.2	79.5	82.8	95.2
		Int. Cap.	15.5	24.1	33.0	39.4	50.1	70.2	79.5	82.8	95.2
		kW	6.0	6.2	6.5	6.7	7.1	7.5	7.9	8.0	8.4
	3000	Capacity	17.4	27.1	37.2	44.6	59.3	73.0	82.1	85.4	97.7
		Int. Cap.	16.1	24.9	34.2	40.7	52.0	73.0	82.1	85.4	97.7
		kW	5.9	6.1	6.3	6.4	6.7	7.1	7.3	7.4	7.7
	3750	Capacity	17.7	27.6	38.0	45.5	60.6	74.3	83.7	87.0	98.8
		Int. Cap.	16.4	25.4	34.9	41.5	53.1	74.3	83.7	87.0	98.8
		kW	5.9	6.0	6.2	6.3	6.5	6.8	7.0	7.0	7.3

– Indicates standard rating point

LEGEND

Capacity – Instantaneous Capacity (1000 Btuh) includes indoor fan motor heat @AHRI static conditions

Int. Cap. – Integrated Capacity is Instantaneous Capacity minus the effects of frost on the outdoor coil and the heat required to defrost

RH – Relative Humidity

dD – Dry Bulb

ADVANCED PRODUCT DATA

Table 18 – HEATING CAPACITY **8.5 TONS**

50HCQD09											
RETURN AIR (°F db)	CFM (STANDARD AIR)		TEMPERATURE AIR ENTERING OUTDOOR COIL (°F db AT 70% RH)								
			–10	0	10	17	30	40	47	50	60
55	2250	Capacity	35.1	37.7	49.0	57.4	74.4	87.8	98.9	102.6	118.3
		Int. Cap.	32.5	34.7	45.0	52.3	65.2	87.8	98.9	102.6	118.3
		kW	5.4	5.3	5.5	5.7	6.1	6.4	6.7	6.7	7.1
	3400	Capacity	32.6	39.1	50.8	59.4	76.8	90.8	102.1	105.7	121.3
		Int. Cap.	30.1	36.0	46.6	54.1	67.3	90.8	102.1	105.7	121.3
		kW	5.4	5.3	5.5	5.7	6.0	6.2	6.4	6.4	6.7
	4250	Capacity	34.4	42.6	54.4	63.3	80.9	95.1	106.1	109.6	125.0
		Int. Cap.	31.8	39.2	50.0	57.7	70.9	95.1	106.1	109.6	125.0
		kW	6.2	6.2	6.3	6.4	6.7	6.9	7.0	7.1	7.3
70	2250	Capacity	35.2	33.3	44.5	52.8	69.3	83.1	93.6	97.3	112.9
		Int. Cap.	32.6	30.6	40.9	48.1	60.7	83.1	93.6	97.3	112.9
		kW	6.3	6.0	6.3	6.5	6.9	7.3	7.6	7.7	8.1
	3400	Capacity	35.6	34.9	46.5	55.0	72.5	86.1	97.1	100.8	116.2
		Int. Cap.	32.9	32.1	42.7	50.1	63.5	86.1	97.1	100.8	116.2
		kW	6.3	6.1	6.3	6.5	6.8	7.1	7.3	7.3	7.6
	4250	Capacity	38.2	38.6	50.3	59.0	76.7	90.5	101.6	105.2	120.2
		Int. Cap.	35.3	35.5	46.2	53.7	67.2	90.5	101.6	105.2	120.2
		kW	7.2	6.9	7.1	7.2	7.5	7.7	7.9	7.9	8.2
80	2250	Capacity	34.6	29.6	40.9	49.1	65.4	79.8	89.9	93.8	109.1
		Int. Cap.	32.0	27.2	37.5	44.8	57.3	79.8	89.9	93.8	109.1
		kW	7.1	6.6	6.9	7.1	7.5	8.0	8.3	8.4	8.8
	3400	Capacity	35.2	31.2	42.8	51.4	68.2	82.7	93.4	97.2	112.5
		Int. Cap.	32.5	28.7	39.3	46.8	59.8	82.7	93.4	97.2	112.5
		kW	7.1	6.7	6.9	7.1	7.4	7.7	8.0	8.1	8.4
	4250	Capacity	38.2	34.9	46.7	55.4	72.7	87.1	98.2	101.8	116.8
		Int. Cap.	35.3	32.1	42.9	50.5	63.7	87.1	98.2	101.8	116.8
		kW	7.9	7.5	7.7	7.8	8.1	8.4	8.6	8.6	8.9

– Indicates standard rating point

LEGEND

Capacity – Instantaneous Capacity (1000 Btuh) includes indoor fan motor heat @AHRI static conditions

Int. Cap. – Integrated Capacity is Instantaneous Capacity minus the effects of frost on the outdoor coil and the heat required to defrost

RH – Relative Humidity

db – Dry Bulb

ADVANCED PRODUCT DATA

Table 19 – STATIC PRESSURE ADDERS (Factory Options and/or Accessories)

Economizer

3 – 5 TONS											
CFM (in. wg)	**600**	**800**	**1000**	**1250**	**1500**	**1750**	**2000**	**2250**	**2500**	**2750**	**3000**
Vertical Economizer	0.01	0.02	0.04	0.05	0.07	0.09	0.12	0.15	0.18	0.22	0.26
Horizontal Economizer	0.02	0.03	0.04	0.06	0.08	0.10	0.13	0.15	0.18	0.23	0.28

6 – 8.5 TONS																
CFM (in. wg)	**2250**	**2500**	**2750**	**3000**	**3250**	**3500**	**3750**	**4000**	**4250**	**4500**	**4750**	**5000**	**5250**	**5500**	**5750**	**6000**
Vertical Economizer	0.06	0.08	0.09	0.12	0.13	0.15	0.17	0.20	0.22	0.25	0.29	0.33	0.36	0.40	0.44	0.48
Horizontal Economizer	0.08	0.10	0.13	0.15	0.18	0.21	0.25	0.28	0.30	0.34	0.39	0.43	0.47	0.51	0.56	0.60

Electric Heaters

3 – 5 TONS										
CFM (in. wg)	**600**	**900**	**1200**	**1400**	**1600**	**1800**	**2000**	**2200**	**2400**	**2600**
1 Electric Heater Module	0.03	0.05	0.07	0.09	0.09	0.10	0.11	0.11	0.12	0.13
2 Electric Heater Modules	0.13	0.15	0.16	0.16	0.16	0.17	0.17	0.17	0.18	0.18

6 – 8.5 TONS																
CFM (in. wg)	**2250**	**2500**	**2750**	**3000**	**3250**	**3500**	**3750**	**4000**	**4250**	**4500**	**4750**	**5000**	**5250**	**5500**	**5750**	**6000**
1 Electric Heater Module	0.03	0.04	0.04	0.05	0.06	0.07	0.08	0.09	0.10	0.11	0.12	0.13	0.14	0.15	0.16	0.18
2 Electric Heater Modules	0.04	0.05	0.05	0.06	0.07	0.08	0.09	0.10	0.11	0.12	0.13	0.15	0.16	0.17	0.19	0.20

ADVANCED PRODUCT DATA

General fan performance notes:

1. Interpolation is permissible. Do not extrapolate.
2. External static pressure is the static pressure difference between the return duct and the supply duct plus the static pressure caused by any FIOPs or accessories.
3. Tabular data accounts for pressure loss due to clean filters, unit casing, and wet coils. Factory options and accessories may add static pressure losses, as shown in the above tables. Selection software is available, through your salesperson, to help you select the best motor/drive combination for your application.
4. The Fan Performance tables offer motor/drive recommendations. In cases when two motor/drive combinations would work, Carrier recommended the lower horsepower option.
5. For information on the electrical properties of Carrier motors, please see the Electrical information section of this book.
6. For more information on the performance limits of Carrier motors, see the application data section of this book.

FAN PERFORMANCE

Table 20 – 50HCQA04 3 TON HORIZONTAL UNIT DIRECT DRIVE

SPEED (TORQUE) TAP	CFM	ESP	BHP
1	900	0.57	0.25
	975	0.47	0.24
	1050	0.37	0.22
	1125	0.27	0.21
	1200	0.18	0.20
	1275	0.09	0.20
	1350	–	–
	1425	–	–
	1500	–	–
2	900	0.73	0.30
	975	0.62	0.29
	1050	0.51	0.28
	1125	0.41	0.27
	1200	0.30	0.25
	1275	0.19	0.24
	1350	0.08	0.22
	1425	–	–
	1500	–	–
3	900	1.04	0.41
	975	0.93	0.40
	1050	0.82	0.39
	1125	0.70	0.38
	1200	0.58	0.36
	1275	0.46	0.35
	1350	0.34	0.33
	1425	0.23	0.31
	1500	0.12	0.30
4	900	1.26	0.49
	975	1.18	0.50
	1050	1.09	0.50
	1125	0.99	0.50
	1200	0.88	0.49
	1275	0.76	0.47
	1350	0.63	0.46
	1425	0.50	0.44
	1500	0.37	0.42
5	900	1.35	0.52
	975	1.30	0.54
	1050	1.26	0.57
	1125	1.21	0.59
	1200	1.16	0.62
	1275	1.12	0.64
	1350	1.07	0.67
	1425	1.02	0.70
	1500	0.97	0.73

Table 21 – 50HCQA04 3 TON VERTICAL UNIT DIRECT DRIVE

SPEED (TORQUE) TAP	CFM	ESP	BHP
1	900	0.44	0.19
	975	0.34	0.18
	1050	0.24	0.17
	1125	0.15	0.16
	1200	0.07	0.16
	1275	–	–
	1350	–	–
	1425	–	–
	1500	–	–
2	900	0.60	0.24
	975	0.49	0.23
	1050	0.38	0.22
	1125	0.28	0.21
	1200	0.18	0.20
	1275	0.09	0.19
	1350	–	–
	1425	–	–
	1500	–	–
3	900	0.93	0.36
	975	0.81	0.35
	1050	0.70	0.34
	1125	0.58	0.33
	1200	0.47	0.31
	1275	0.36	0.30
	1350	0.25	0.29
	1425	0.14	0.27
	1500	–	–
4	900	1.15	0.44
	975	1.07	0.45
	1050	0.97	0.46
	1125	0.86	0.46
	1200	0.74	0.43
	1275	0.61	0.41
	1350	0.48	0.40
	1425	0.35	0.39
	1500	0.23	0.37
5	900	1.24	0.51
	975	1.19	0.52
	1050	1.24	0.54
	1125	1.24	0.57
	1200	1.03	0.59
	1275	0.98	0.61
	1350	0.93	0.64
	1425	0.88	0.67
	1500	0.82	0.69

ADVANCED PRODUCT DATA

FAN PERFORMANCE (cont.)

Table 22 – 50HCQA05 4 TON HORIZONTAL UNIT DIRECT DRIVE

SPEED (TORQUE) TAP	CFM	ESP	BHP
1	1200	0.93	0.48
	1300	0.80	0.46
	1400	0.66	0.44
	1500	0.51	0.41
	1600	0.36	0.39
	1700	0.22	0.36
	1800	0.08	0.33
	1900	–	–
	2000	–	–
2	1200	1.04	0.53
	1300	0.91	0.51
	1400	0.76	0.48
	1500	0.61	0.46
	1600	0.45	0.43
	1700	0.30	0.40
	1800	0.16	0.38
	1900	0.04	0.35
	2000	–	–
3	1200	1.18	0.58
	1300	1.09	0.59
	1400	0.98	0.60
	1500	0.86	0.60
	1600	0.72	0.57
	1700	0.57	0.54
	1800	0.42	0.51
	1900	0.28	0.48
	2000	0.15	0.45
4	1200	1.24	0.60
	1300	1.18	0.63
	1400	1.12	0.66
	1500	1.04	0.71
	1600	0.95	0.70
	1700	0.85	0.71
	1800	0.73	0.71
	1900	0.60	0.69
	2000	0.45	0.65
5	1200	1.25	0.61
	1300	1.20	0.65
	1400	1.12	0.68
	1500	1.04	0.68
	1600	1.05	0.76
	1700	1.01	0.76
	1800	0.96	0.84
	1900	0.91	0.89
	2000	0.87	0.93

Table 23 – 50HCQA05 4 TON VERTICAL UNIT DIRECT DRIVE

SPEED (TORQUE) TAP	CFM	ESP	BHP
1	1200	0.87	0.43
	1300	0.73	0.41
	1400	0.59	0.39
	1500	0.43	0.37
	1600	0.27	0.34
	1700	0.12	0.33
	1800	–	–
	1900	–	–
	2000	–	–
2	1200	0.96	0.48
	1300	0.84	0.46
	1400	0.69	0.44
	1500	0.53	0.41
	1600	0.37	0.39
	1700	0.21	0.36
	1800	0.06	0.34
	1900	–	–
	2000	–	–
3	1200	1.13	0.53
	1300	1.06	0.53
	1400	0.98	0.54
	1500	0.88	0.56
	1600	0.76	0.54
	1700	0.62	0.52
	1800	0.47	0.50
	1900	0.31	0.47
	2000	0.15	0.45
4	1200	1.16	0.57
	1300	1.12	0.59
	1400	1.07	0.62
	1500	1.00	0.67
	1600	0.91	0.66
	1700	0.80	0.67
	1800	0.67	0.67
	1900	0.52	0.63
	2000	0.35	0.61
5	1200	1.16	0.59
	1300	1.11	0.63
	1400	1.01	0.67
	1500	0.91	0.67
	1600	0.96	0.75
	1700	0.91	0.75
	1800	0.86	0.83
	1900	0.80	0.87
	2000	0.74	0.91

ADVANCED PRODUCT DATA

FAN PERFORMANCE (cont.)

Table 24 – 50HCQA06 5 TON HORIZONTAL UNIT DIRECT DRIVE

SPEED (TORQUE) TAP	CFM	ESP	BHP
1	1500	0.37	0.35
	1625	0.22	0.33
	1750	0.08	0.31
	1875	–	–
	2000	–	–
	2125	–	–
	2250	–	–
	2375	–	–
	2500	–	–
2	1500	0.54	0.44
	1625	0.37	0.41
	1750	0.20	0.38
	1875	0.04	0.35
	2000	–	–
	2125	–	–
	2250	–	–
	2375	–	–
	2500	–	–
3	1500	1.28	0.83
	1625	1.10	0.81
	1750	0.90	0.78
	1875	0.68	0.74
	2000	0.47	0.70
	2125	0.27	0.66
	2250	0.10	0.62
	2375	–	–
	2500	–	–
4	1500	1.46	0.94
	1625	1.32	0.92
	1750	1.16	0.96
	1875	0.96	0.95
	2000	0.76	0.91
	2125	0.54	0.86
	2250	0.33	0.82
	2375	0.14	0.78
	2500	0.00	0.72
5	1500	1.52	0.97
	1625	1.42	1.01
	1750	1.16	1.05
	1875	0.96	1.09
	2000	1.00	1.09
	2125	0.82	1.06
	2250	0.62	1.02
	2375	0.40	0.98
	2500	0.16	0.93

Table 25 – 50HCQA06 5 TON VERTICAL UNIT DIRECT DRIVE

SPEED (TORQUE) TAP	CFM	ESP	BHP
1	1500	0.27	0.32
	1625	0.13	0.30
	1750	–	–
	1875	–	–
	2000	–	–
	2125	–	–
	2250	–	–
	2375	–	–
	2500	–	–
2	1500	0.42	0.40
	1625	0.25	0.37
	1750	0.08	0.34
	1875	–	–
	2000	–	–
	2125	–	–
	2250	–	–
	2375	–	–
	2500	–	–
3	1500	1.11	0.79
	1625	0.91	0.76
	1750	0.70	0.74
	1875	0.50	0.70
	2000	0.30	0.67
	2125	0.12	0.63
	2250	–	–
	2375	–	–
	2500	–	–
4	1500	1.29	0.90
	1625	1.13	0.88
	1750	0.95	0.91
	1875	0.74	0.88
	2000	0.52	0.84
	2125	0.30	0.80
	2250	0.11	0.77
	2375	–	–
	2500	–	–
5	1500	1.36	0.94
	1625	1.24	0.99
	1750	0.95	1.02
	1875	0.74	1.05
	2000	0.74	1.03
	2125	0.53	0.99
	2250	0.31	0.94
	2375	0.08	0.90
	2500	–0.14	0.86

ADVANCED PRODUCT DATA

FAN PERFORMANCE (cont.)

Table 26 – 50HCQA04 **3 TON HORIZONTAL SUPPLY**

CFM	AVAILABLE EXTERNAL STATIC PRESSURE (IN. WG)									
	0.2		0.4		0.6		0.8		1.0	
	RPM	BHP	RPM	BHP	RPM	BHP	RPM	BHP	RPM	BHP
900	574	0.13	707	0.23	817	0.34	913	0.47	999	0.61
975	597	0.15	727	0.25	835	0.37	929	0.50	1015	0.64
1050	621	0.18	747	0.28	853	0.40	946	0.53	1030	0.68
1125	646	0.20	768	0.31	872	0.43	964	0.57	1047	0.72
1200	671	0.23	790	0.34	892	0.47	982	0.61	1064	0.76
1275	696	0.26	812	0.38	912	0.51	1001	0.65	1082	0.81
1350	723	0.30	835	0.42	933	0.55	1020	0.70	1100	0.86
1425	749	0.34	859	0.46	955	0.60	1040	0.75	1119	0.91
1500	776	0.38	883	0.51	977	0.65	1061	0.80	1138	0.97

Med static – 819–1251, 1.5 HP (motor is new 1.7 HP 3 ph)
High static – 1035–1466, 2.0 max HP (motor is 2.4 HP 3 ph)

CFM	AVAILABLE EXTERNAL STATIC PRESSURE (IN. WG)									
	1.2		1.4		1.6		1.8		2.0	
	RPM	BHP	RPM	BHP	RPM	BHP	RPM	BHP	RPM	BHP
900	1078	0.77	1151	0.93	1220	1.11	1284	1.30	1346	1.49
975	1093	0.80	1165	0.97	1233	1.15	1297	1.33	1358	1.53
1050	1108	0.84	1180	1.01	1247	1.19	1311	1.38	1371	1.58
1125	1123	0.88	1195	1.05	1261	1.23	1325	1.42	1385	1.62
1200	1140	0.92	1210	1.10	1276	1.28	1339	1.47	1399	1.68
1275	1157	0.97	1226	1.15	1292	1.33	1354	1.53	1414	1.73
1350	1174	1.02	1243	1.20	1308	1.39	1370	1.59	1429	1.80
1425	1192	1.08	1260	1.26	1325	1.45	1386	1.65	1444	1.86
1500	1210	1.14	1278	1.33	1342	1.52	1403	1.72	1461	1.93

Med static – 819–1251, 1.5 HP (motor is new 1.7 HP 3 ph)
High static – 1035–1466, 2.0 max HP (motor is 2.4 HP 3 ph)

Table 27 – 50HCQA04 **3 TON VERTICAL SUPPLY**

CFM	AVAILABLE EXTERNAL STATIC PRESSURE (IN. WG)									
	0.2		0.4		0.6		0.8		1.0	
	RPM	BHP	RPM	BHP	RPM	BHP	RPM	BHP	RPM	BHP
900	594	0.15	740	0.25	867	0.37	981	0.52	1084	0.68
975	618	0.17	758	0.28	881	0.40	991	0.55	1092	0.71
1050	642	0.19	777	0.30	896	0.43	1003	0.58	1102	0.75
1125	668	0.22	797	0.34	912	0.47	1017	0.62	1113	0.79
1200	695	0.25	818	0.37	930	0.51	1032	0.66	1126	0.83
1275	722	0.29	841	0.41	949	0.55	1048	0.71	1140	0.88
1350	750	0.33	864	0.46	968	0.60	1065	0.76	1155	0.93
1425	778	0.37	888	0.50	989	0.65	1083	0.81	1171	0.99
1500	807	0.42	913	0.56	1011	0.71	1103	0.87	1188	1.05

Med static – 819–1251, 1.5 HP (motor is new 1.7 HP 3 ph)
High static – 1035–1466, 2.0 max HP (motor is 2.4 HP 3 ph)

CFM	AVAILABLE EXTERNAL STATIC PRESSURE (IN. WG)									
	1.2		1.4		1.6		1.8		2.0	
	RPM	BHP	RPM	BHP	RPM	BHP	RPM	BHP	RPM	BHP
900	1180	0.86	1269	1.05	1354	1.25	1434	1.47	**1511**	**1.70**
975	1186	0.89	1275	1.08	1358	1.29	1437	1.51	**1513**	**1.74**
1050	1194	0.92	1281	1.12	1363	1.32	1441	1.54	**1516**	**1.78**
1125	1204	0.97	1289	1.16	1370	1.37	1447	1.59	**1520**	**1.82**
1200	1215	1.01	1298	1.21	1378	1.42	1454	1.64	**1526**	**1.87**
1275	1227	1.06	1309	1.26	1387	1.47	1462	1.69	**1533**	**1.92**
1350	1240	1.12	1321	1.32	1397	1.53	**1471**	**1.75**	**1541**	**1.99**
1425	1254	1.18	1333	1.38	1409	1.59	**1481**	**1.82**	–	–
1500	1270	1.24	1347	1.45	1421	1.66	**1492**	**1.89**	–	–

Med static – 819–1251, 1.5 HP (motor is new 1.7 HP 3 ph)
High static – 1035–1466, 2.0 max HP (motor is 2.4 HP 3 ph)

Bold Face indicates field–supplied drive

Recommend using field–supplied fan pulley (part no. KR11AD600), motor pulley (part no. KR11HY191) and belt (part no. KR29AF043).

ADVANCED PRODUCT DATA

FAN PERFORMANCE (cont.)

Table 28 – 50HCQA05 **4 TON HORIZONTAL SUPPLY**

CFM	Available External Static Pressure (in. wg)									
	0.2		0.4		0.6		0.8		1.0	
	RPM	BHP	RPM	BHP	RPM	BHP	RPM	BHP	RPM	BHP
1200	630	0.20	755	0.31	859	0.43	949	0.56	1030	0.70
1300	659	0.24	781	0.36	883	0.48	972	0.61	1052	0.76
1400	689	0.28	808	0.40	908	0.53	995	0.67	1075	0.82
1500	720	0.33	836	0.46	933	0.59	1020	0.74	1098	0.89
1600	752	0.38	864	0.52	960	0.66	1044	0.81	1121	0.97
1700	784	0.44	893	0.58	986	0.73	1070	0.89	1146	1.05
1800	816	0.50	922	0.65	1014	0.81	1096	0.97	1171	1.14
1900	849	0.58	952	0.73	1042	0.90	1122	1.07	1196	1.24
2000	882	0.66	982	0.82	1070	0.99	1149	1.17	1222	1.35

CFM	AVAILABLE EXTERNAL STATIC PRESSURE (IN. WG)									
	1.2		1.4		1.6		1.8		2.0	
	RPM	BHP	RPM	BHP	RPM	BHP	RPM	BHP	RPM	BHP
1200	1104	0.84	1173	0.99	1237	1.15	1298	1.32	1356	1.49
1300	1125	0.91	1194	1.06	1258	1.23	1318	1.40	1375	1.58
1400	1147	0.98	1215	1.14	1278	1.31	1338	1.48	1395	1.67
1500	1170	1.05	1237	1.22	1299	1.39	1359	1.57	1416	1.76
1600	1193	1.13	1259	1.31	1321	1.49	1380	1.67	1437	1.86
1700	1216	1.22	1282	1.40	1344	1.59	1402	1.78	1458	1.97
1800	1240	1.32	1305	1.50	1366	1.69	1424	1.89	1480	2.09
1900	1265	1.43	1329	1.61	1390	1.81	1447	2.01	1502	2.22
2000	1290	1.54	1353	1.73	1413	1.93	1470	2.14	1525	2.35

Med static – 920–1303, 1.5 HP (motor is new 1.7 HP 3 ph)
High static – 1035–1466, 2.0 max HP (motor is 2.4 HP 3ph)

Recommend using field–supplied fan pulley (part no. KR11AD561), motor pulley (part no. KR11HY181) and belt (part no. KR29AF041).

ADVANCED PRODUCT DATA

Table 29 – 50HCQA05 **4 TON VERTICAL SUPPLY**

CFM	AVAILABLE EXTERNAL STATIC PRESSURE (IN. WG)									
	0.2		0.4		0.6		0.8		1.0	
	RPM	BHP	RPM	BHP	RPM	BHP	RPM	BHP	RPM	BHP
1200	682	0.25	800	0.36	897	0.48	982	0.61	1058	0.75
1300	717	0.29	832	0.42	928	0.55	1011	0.68	1086	0.82
1400	753	0.34	865	0.48	958	0.61	1041	0.76	1115	0.91
1500	789	0.40	898	0.54	990	0.69	1071	0.84	1144	1.00
1600	826	0.47	932	0.62	1022	0.77	1102	0.93	1174	1.09
1700	863	0.54	966	0.70	1055	0.86	1133	1.03	1205	1.20
1800	901	0.62	1001	0.79	1088	0.96	1165	1.13	1235	1.31
1900	939	0.71	1037	0.89	1121	1.07	1197	1.25	1267	1.44
2000	978	0.81	1073	0.99	1156	1.18	1230	1.37	1299	1.57

CFM	AVAILABLE EXTERNAL STATIC PRESSURE (IN. WG)									
	1.2		1.4		1.6		1.8		2.0	
	RPM	BHP	RPM	BHP	RPM	BHP	RPM	BHP	RPM	BHP
1200	1128	0.89	1192	1.03	1252	1.18	1309	1.34	1363	1.50
1300	1155	0.97	1219	1.12	1279	1.28	1336	1.44	1389	1.61
1400	1183	1.06	1247	1.22	1306	1.38	1362	1.55	1416	1.72
1500	1212	1.16	1275	1.32	1334	1.49	1389	1.67	1443	1.85
1600	1241	1.26	1303	1.43	1362	1.61	1417	1.79	1470	1.98
1700	1271	1.37	1332	1.55	1390	1.74	1445	1.93	1498	2.12
1800	1301	1.50	1362	1.68	1419	1.87	1474	2.07	1526	2.27
1900	1331	1.63	1392	1.82	1449	2.02	1503	2.22	–	–
2000	1362	1.77	1422	1.97	1478	2.18	1532	2.38	–	–

Med static – 920–1303, 1.5 HP (motor is new 1.7 HP 3 ph)
High static – 1035–1466, 2.0 max HP (motor is 2.4 HP 3ph)

Recommend using field–supplied fan pulley (part no. KR11AD561), motor pulley (part no. KR11HY181) and belt (part no. KR29AF041).

FAN PERFORMANCE (cont.)

Table 30 – 50HCQA06 **5 TON HORIZONTAL SUPPLY**

CFM	AVAILABLE EXTERNAL STATIC PRESSURE (IN. WG)									
	0.2		0.4		0.6		0.8		1.0	
	RPM	BHP	RPM	BHP	RPM	BHP	RPM	BHP	RPM	BHP
1500	725	0.33	840	0.46	937	0.60	1023	0.75	1101	0.90
1625	765	0.40	876	0.54	970	0.68	1054	0.84	1131	1.00
1750	806	0.48	912	0.63	1004	0.78	1087	0.94	1162	1.11
1875	847	0.57	950	0.72	1039	0.88	1120	1.05	1194	1.23
2000	889	0.66	988	0.83	1075	1.00	1154	1.18	1226	1.36
2125	931	0.78	1027	0.95	1112	1.13	1189	1.31	1260	1.50
2250	974	0.90	1067	1.08	1149	1.27	1224	1.46	1294	1.66
2375	1018	1.03	1107	1.23	1187	1.43	1261	1.63	1329	1.84
2500	1061	1.19	1148	1.39	1226	1.59	1297	1.81	1364	2.02

Med static – 1066–1380, 2.0 HP (motor is 2.4 HP 3 ph)
High static – 1208–1639, 2.9 max HP (motor is 2.9 HP 3 ph)

CFM	AVAILABLE EXTERNAL STATIC PRESSURE (IN. WG)									
	1.2		1.4		1.6		1.8		2.0	
	RPM	BHP	RPM	BHP	RPM	BHP	RPM	BHP	RPM	BHP
1500	1172	1.06	1239	1.23	1302	1.40	1361	1.58	1418	1.77
1625	1201	1.16	1267	1.34	1329	1.52	1388	1.71	1444	1.90
1750	1231	1.28	1296	1.46	1358	1.65	1416	1.84	1472	2.04
1875	1262	1.41	1326	1.60	1387	1.79	1445	1.99	1499	2.20
2000	1294	1.55	1357	1.74	1417	1.95	1474	2.15	1528	2.36
2125	1326	1.70	1388	1.90	1447	2.11	1504	2.33	1557	2.55
2250	1359	1.87	1420	2.08	1479	2.29	1534	2.51	1587	2.74
2375	1393	2.05	1453	2.27	1511	2.49	1566	2.72	–	–
2500	1427	2.24	1487	2.47	1543	2.70	1597	2.94	–	–

Med static – 1066–1380, 2.0 HP (motor is 2.4 HP 3 ph)
High static – 1208–1639, 2.9 max HP (motor is 2.9 HP 3 ph)

Table 31 – 50HCQA06 **5 TON VERTICAL SUPPLY**

CFM	AVAILABLE EXTERNAL STATIC PRESSURE (IN. WG)									
	0.2		0.4		0.6		0.8		1.0	
	RPM	BHP	RPM	BHP	RPM	BHP	RPM	BHP	RPM	BHP
1500	794	0.41	902	0.55	993	0.69	1074	0.85	1147	1.00
1625	840	0.49	945	0.64	1034	0.80	1113	0.96	1185	1.13
1750	888	0.59	988	0.75	1075	0.92	1153	1.09	1223	1.26
1875	936	0.70	1033	0.87	1117	1.05	1193	1.23	1263	1.41
2000	984	0.82	1078	1.00	1160	1.19	1235	1.39	1303	1.58
2125	1033	0.96	1124	1.15	1204	1.35	1277	1.56	1343	1.76
2250	1083	1.11	1170	1.32	1248	1.53	1319	1.74	1385	1.96
2375	1133	1.28	1217	1.50	1293	1.72	1363	1.95	1427	2.17
2500	1183	1.47	1265	1.70	1339	1.93	1406	2.17	1470	2.41

Med static – 1066–1380, 2.0 HP (motor is 2.4 HP 3 ph)
High static – 1208–1639, 2.9 max HP (motor is 2.9 HP 3 ph)

CFM	AVAILABLE EXTERNAL STATIC PRESSURE (IN. WG)									
	1.2		1.4		1.6		1.8		2.0	
	RPM	BHP	RPM	BHP	RPM	BHP	RPM	BHP	RPM	BHP
1500	1214	1.16	1277	1.33	1336	1.50	1392	1.67	1445	1.85
1625	1251	1.30	1313	1.47	1371	1.65	1427	1.83	1479	2.02
1750	1289	1.44	1350	1.63	1407	1.81	1462	2.01	1514	2.20
1875	1327	1.60	1387	1.80	1444	1.99	1498	2.19	1550	2.40
2000	1366	1.78	1426	1.98	1482	2.19	1535	2.40	1586	2.61
2125	1406	1.97	1464	2.18	1520	2.40	1573	2.62	1623	2.84
2250	1446	2.18	1504	2.40	1559	2.62	1611	2.85	–	–
2375	1487	2.40	1544	2.63	1598	2.87	–	–	–	–
2500	1529	2.64	1585	2.89	–	–	–	–	–	–

Med static – 1066–1380, 2.0 HP (motor is 2.4 HP 3 ph)
High static – 1208–1639, 2.9 max HP (motor is 2.9 HP 3 ph)

ADVANCED PRODUCT DATA

FAN PERFORMANCE (cont.)

Table 32 – 50HCQA07 **6 TON HORIZONTAL SUPPLY**

CFM	AVAILABLE EXTERNAL STATIC PRESSURE (IN. WG)									
	0.2		0.4		0.6		0.8		1.0	
	RPM	BHP	RPM	BHP	RPM	BHP	RPM	BHP	RPM	BHP
1800	415	0.28	510	0.46	588	0.65	655	0.85	715	1.08
1950	431	0.32	525	0.51	601	0.71	668	0.93	727	1.16
2100	448	0.38	540	0.57	615	0.78	681	1.01	740	1.25
2250	465	0.43	555	0.64	629	0.86	694	1.10	753	1.34
2400	483	0.49	571	0.71	644	0.94	708	1.19	766	1.45
2550	501	0.56	587	0.79	659	1.04	722	1.29	779	1.56
2700	519	0.64	603	0.88	674	1.14	737	1.40	793	1.68
2850	538	0.72	620	0.98	689	1.24	751	1.52	807	1.80
3000	557	0.82	637	1.08	705	1.36	766	1.64	822	1.94

CFM	AVAILABLE EXTERNAL STATIC PRESSURE (IN. WG)									
	1.2		1.4		1.6		1.8		2.0	
	RPM	BHP	RPM	BHP	RPM	BHP	RPM	BHP	RPM	BHP
1800	770	1.31	821	1.56	868	1.82	913	2.09	955	2.36
1950	782	1.40	832	1.66	879	1.92	924	2.20	966	2.49
2100	794	1.50	844	1.76	891	2.03	935	2.32	977	2.61
2250	806	1.60	856	1.87	903	2.15	947	2.45	988	2.75
2400	819	1.71	868	1.99	915	2.28	958	2.58	1000	2.89
2550	832	1.83	881	2.12	927	2.42	971	2.73	1012	3.05
2700	845	1.96	894	2.26	940	2.57	983	2.88	1024	3.21
2850	859	2.10	907	2.41	953	2.72	995	3.05	1036	3.38
3000	873	2.24	921	2.56	966	2.89	1008	3.22	1049	3.56

Std static – 878–1192, 1.5 HP (motor is 1.7 HP 3 ph)
Med static – 1066–1380, 2.9 HP (motor is 2.4 HP 3 ph)
High static – 1208–1639, 2.9 max HP (motor is 2.9 HP 3 ph)

ADVANCED PRODUCT DATA

Table 33 – 50HCQA07 **6 TON VERTICAL SUPPLY**

CFM	AVAILABLE EXTERNAL STATIC PRESSURE (IN. WG)									
	0.2		0.4		0.6		0.8		1.0	
	RPM	BHP	RPM	BHP	RPM	BHP	RPM	BHP	RPM	BHP
1800	446	0.33	534	0.50	609	0.70	676	0.91	736	1.14
1950	467	0.39	552	0.57	625	0.77	690	0.99	750	1.23
2100	489	0.45	571	0.64	642	0.86	706	1.08	764	1.33
2250	511	0.53	591	0.73	660	0.95	722	1.19	779	1.44
2400	534	0.61	611	0.82	678	1.05	739	1.30	795	1.56
2550	558	0.71	631	0.93	697	1.17	756	1.42	811	1.69
2700	581	0.81	652	1.04	716	1.29	774	1.55	828	1.83
2850	605	0.93	674	1.17	736	1.43	792	1.70	845	1.98
3000	630	1.06	696	1.31	756	1.58	811	1.86	863	2.15

CFM	AVAILABLE EXTERNAL STATIC PRESSURE (IN. WG)									
	1.2		1.4		1.6		1.8		2.0	
	RPM	BHP	RPM	BHP	RPM	BHP	RPM	BHP	RPM	BHP
1800	791	1.39	843	1.65	892	1.93	938	2.22	981	2.53
1950	804	1.49	855	1.76	903	2.04	949	2.34	992	2.65
2100	818	1.59	868	1.87	915	2.16	961	2.46	1003	2.78
2250	832	1.71	882	1.99	928	2.29	973	2.59	1015	2.92
2400	847	1.83	896	2.12	942	2.43	986	2.74	1028	3.07
2550	862	1.97	910	2.27	956	2.58	999	2.90	1041	3.23
2700	878	2.12	926	2.42	971	2.74	1013	3.07	1055	3.41
2850	895	2.28	941	2.59	986	2.92	1028	3.25	1069	3.60
3000	912	2.46	958	2.78	1001	3.11	1043	3.45	1083	3.80

Std static – 878–1192, 1.5 HP (motor is 1.7 HP 3 ph)
Med static – 1066–1380, 2.9 HP (motor is 2.4 HP 3 ph)
High static – 1208–1639, 2.9 max HP (motor is 2.9 HP 3 ph)

FAN PERFORMANCE (cont.)

Table 34 – 50HCQD08 **7.5 TON HORIZONTAL SUPPLY**

CFM	AVAILABLE EXTERNAL STATIC PRESSURE (IN. WG)									
	0.2		0.4		0.6		0.8		1.0	
	RPM	BHP	RPM	BHP	RPM	BHP	RPM	BHP	RPM	BHP
2250	433	0.29	518	0.41	596	0.54	667	0.67	733	0.81
2438	454	0.35	535	0.48	609	0.61	677	0.75	741	0.90
2625	477	0.42	553	0.55	624	0.69	689	0.84	751	1.00
2813	500	0.49	572	0.64	640	0.78	703	0.94	763	1.10
3000	523	0.58	592	0.73	657	0.88	718	1.05	775	1.22
3188	547	0.68	613	0.83	675	1.00	733	1.17	789	1.34
3375	571	0.78	634	0.95	694	1.12	750	1.30	804	1.48
3563	596	0.90	656	1.07	713	1.25	768	1.44	820	1.63
3750	621	1.03	679	1.21	734	1.40	786	1.59	837	1.79

CFM	AVAILABLE EXTERNAL STATIC PRESSURE (IN. WG)									
	1.2		1.4		1.6		1.8		2.0	
	RPM	BHP	RPM	BHP	RPM	BHP	RPM	BHP	RPM	BHP
2250	795	0.96	854	1.11	910	1.27	963	1.43	1014	1.60
2438	802	1.05	859	1.21	913	1.38	966	1.55	1016	1.72
2625	810	1.16	865	1.32	919	1.49	970	1.67	1019	1.85
2813	819	1.27	874	1.44	925	1.62	975	1.80	1023	1.99
3000	830	1.39	883	1.57	934	1.76	982	1.95	1029	2.14
3188	843	1.53	894	1.71	943	1.90	990	2.10	1036	2.30
3375	856	1.67	905	1.86	953	2.06	1000	2.27	1045	2.48
3563	870	1.83	918	2.03	965	2.23	1010	2.44	1054	2.66
3750	885	1.99	932	2.20	978	2.42	1022	2.64	1065	2.86

Std static – 460–652, 1.2 BHP
Med static – 591–838, 2.9 HP
High static – 838–1084, 2.9 HP

ADVANCED PRODUCT DATA

Table 35 – 50HCQD08 **7.5 TON VERTICAL SUPPLY**

CFM	AVAILABLE EXTERNAL STATIC PRESSURE (IN. WG)									
	0.2		0.4		0.6		0.8		1.0	
	RPM	BHP	RPM	BHP	RPM	BHP	RPM	BHP	RPM	BHP
2250	457	0.32	536	0.44	604	0.55	664	0.67	719	0.79
2438	481	0.39	557	0.51	623	0.64	682	0.77	735	0.89
2625	505	0.47	578	0.60	642	0.73	700	0.87	753	1.00
2813	530	0.55	601	0.70	663	0.84	719	0.98	771	1.13
3000	556	0.65	623	0.80	684	0.95	738	1.11	789	1.26
3188	582	0.76	647	0.92	705	1.08	759	1.25	808	1.41
3375	608	0.88	671	1.05	727	1.22	779	1.40	828	1.57
3563	634	1.01	695	1.19	750	1.38	801	1.56	848	1.74
3750	661	1.16	719	1.35	773	1.54	822	1.73	869	1.93

CFM	AVAILABLE EXTERNAL STATIC PRESSURE (IN. WG)									
	1.2		1.4		1.6		1.8		2.0	
	RPM	BHP	RPM	BHP	RPM	BHP	RPM	BHP	RPM	BHP
2250	770	0.91	817	1.03	861	1.15	903	1.28	943	1.40
2438	785	1.02	832	1.15	876	1.28	917	1.41	957	1.55
2625	802	1.14	847	1.28	891	1.42	932	1.56	971	1.70
2813	819	1.27	864	1.42	907	1.57	947	1.72	986	1.87
3000	836	1.42	881	1.57	923	1.73	963	1.89	1001	2.05
3188	855	1.57	898	1.74	940	1.90	979	2.07	1017	2.24
3375	873	1.74	916	1.91	957	2.09	996	2.26	1034	2.44
3563	893	1.92	935	2.11	975	2.29	1014	2.47	1051	2.66
3750	912	2.12	954	2.31	994	2.50	1031	2.70	1068	2.89

Std static – 460–652, 1.2 BHP
Med static – 591–838, 2.9 HP
High static – 838–1084, 2.9 HP

FAN PERFORMANCE (cont.)

Table 36 – 50HCQD09 **8.5 TON HORIZONTAL SUPPLY**

CFM	AVAILABLE EXTERNAL STATIC PRESSURE (IN. WG)									
	0.2		0.4		0.6		0.8		1.0	
	RPM	BHP	RPM	BHP	RPM	BHP	RPM	BHP	RPM	BHP
2550	468	0.39	546	0.52	618	0.66	684	0.80	747	0.96
2763	493	0.47	567	0.61	635	0.76	699	0.91	760	1.07
2975	520	0.57	589	0.72	654	0.87	716	1.03	774	1.20
3188	547	0.68	613	0.83	675	1.00	733	1.17	789	1.34
3400	575	0.80	637	0.96	696	1.14	752	1.31	806	1.50
3613	603	0.94	662	1.11	719	1.29	773	1.48	824	1.67
3825	631	1.09	688	1.27	742	1.46	794	1.66	843	1.86
4038	660	1.26	714	1.45	766	1.65	816	1.85	864	2.06
4250	689	1.45	741	1.65	790	1.86	838	2.07	885	2.29

Std static – 591–839, 1.2 HP
Med static – 733–949, 2.9 HP
High static – 838–1084, 3 HP

CFM	AVAILABLE EXTERNAL STATIC PRESSURE (IN. WG)									
	1.2		1.4		1.6		1.8		2.0	
	RPM	BHP	RPM	BHP	RPM	BHP	RPM	BHP	RPM	BHP
2550	806	1.11	863	1.28	916	1.45	968	1.62	1018	1.80
2763	817	1.24	871	1.41	924	1.59	974	1.77	1022	1.95
2975	829	1.37	882	1.55	932	1.74	981	1.93	1028	2.12
3188	843	1.53	894	1.71	943	1.90	990	2.10	1036	2.30
3400	858	1.69	907	1.88	955	2.09	1001	2.29	1046	2.50
3613	874	1.87	922	2.07	968	2.28	1013	2.49	1057	2.71
3825	891	2.07	938	2.28	983	2.49	1027	2.71	1069	2.94
4038	910	2.28	955	2.50	999	2.72	1041	2.95	1083	3.19
4250	930	2.51	973	2.74	1015	2.97	1057	3.21	1097	3.45

Std static – 591–839, 1.2 HP
Med static – 733–949, 2.9 HP
High static – 838–1084, 3 HP

Table 37 – 50HCQD09 **8.5 VERTICAL SUPPLY**

CFM	AVAILABLE EXTERNAL STATIC PRESSURE (IN. WG)									
	0.2		0.4		0.6		0.8		1.0	
	RPM	BHP	RPM	BHP	RPM	BHP	RPM	BHP	RPM	BHP
2550	495	0.43	570	0.56	634	0.70	693	0.83	746	0.96
2763	524	0.53	595	0.67	657	0.81	714	0.95	766	1.09
2975	552	0.63	620	0.79	681	0.94	736	1.09	787	1.24
3188	582	0.76	647	0.92	705	1.08	759	1.25	808	1.41
3400	611	0.89	674	1.07	730	1.24	782	1.42	831	1.59
3613	641	1.05	701	1.23	756	1.42	806	1.60	854	1.79
3825	672	1.22	729	1.42	782	1.61	831	1.81	877	2.00
4038	702	1.41	758	1.62	809	1.83	857	2.03	901	2.24
4250	733	1.62	787	1.84	836	2.06	883	2.28	926	2.49

Std static – 591–839, 1.2 HP
Med static – 733–949, 2.9 HP
High static – 838–1084, 3 HP

CFM	AVAILABLE EXTERNAL STATIC PRESSURE (IN. WG)									
	1.2		1.4		1.6		1.8		2.0	
	RPM	BHP	RPM	BHP	RPM	BHP	RPM	BHP	RPM	BHP
2550	795	1.09	841	1.23	885	1.36	926	1.50	965	1.64
2763	814	1.24	859	1.38	902	1.53	943	1.68	982	1.82
2975	834	1.40	878	1.55	921	1.71	961	1.86	999	2.02
3188	855	1.57	898	1.74	940	1.90	979	2.07	1017	2.24
3400	876	1.76	919	1.94	960	2.12	998	2.29	1036	2.47
3613	898	1.97	940	2.16	980	2.34	1018	2.53	1055	2.72
3825	921	2.20	962	2.40	1001	2.59	1039	2.79	1075	2.99
4038	944	2.45	984	2.65	1023	2.86	1060	3.07	1096	3.27
4250	968	2.71	1007	2.93	1045	3.15	1081	3.36	1117	3.58

Std static – 591–839, 1.2 HP
Med static – 733–949, 2.9 HP
High static – 838–1084, 3 HP

ADVANCED PRODUCT DATA

Table 38 – PULLEY ADJUSTMENT

UNIT		MOTOR/DRIVE COMBO	MOTOR PULLEY TURNS OPEN										
			0	0.5	1.0	1.5	2.0	2.5	3.0	3.5	4.0	4.5	5.0
04	3 phase	Medium Static	1251	1208	1165	1121	1078	1035	992	949	905	862	819
		High Static	1466	1423	1380	1337	1294	1251	1207	1164	1121	1078	1035
05	3 phase	Medium Static	1303	1265	1226	1188	1150	1112	1073	1035	997	958	920
		High Static	1466	1423	1380	1337	1294	1251	1207	1164	1121	1078	1035
06	3 phase	Medium Static	1380	1349	1317	1286	1254	1223	1192	1160	1129	1097	1066
		High Static	1639	1596	1553	1510	1467	1424	1380	1337	1294	1251	1208
07	3 phase	Standard Static	747	721	695	670	644	618	592	566	541	515	489
		Medium Static	949	927	906	884	863	841	819	798	776	755	733
		High Static	1102	1083	1063	1044	1025	1006	986	967	948	928	909
08	3 phase	Standard Static	733	712	690	669	647	626	604	583	561	540	518
		Medium Static	936	911	887	862	838	813	788	764	739	715	690
		High Static	1084	1059	1035	1010	986	961	936	912	887	863	838
09	3 phase	Standard Static	652	633	614	594	575	556	537	518	498	479	460
		Medium Static	838	813	789	764	739	715	690	665	640	616	591
		High Static	1084	1059	1035	1010	986	961	936	912	887	863	838

NOTE: Do not adjust pulley further than 5 turns open.

– Factory settings

* Do not set motor pulley above 5 turns open for A or AX section belts

** Do not set motor pulley below 1 turn open for B or BX section belts

ADVANCED PRODUCT DATA

ECONOMIZER, BAROMETRIC RELIEF AND PE PERFORMANCE

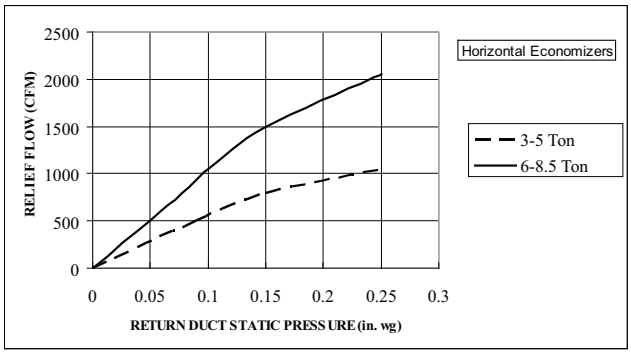

C10612

Fig. 12 - Barometric Relief Flow Capacity

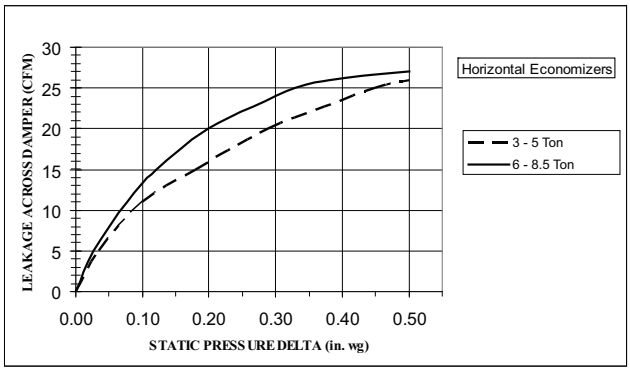

C10613

Fig. 13 - Outdoor Air Damper Leakage

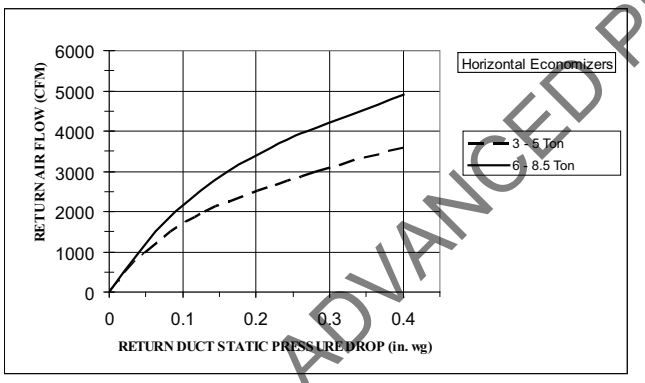

C10614

Fig. 14 - Return Air Pressure Drop

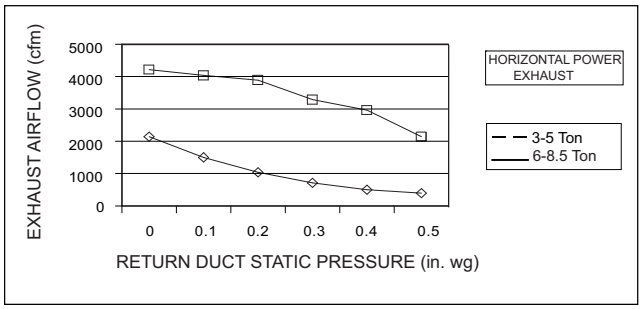

C10615

Fig. 15 - Horizontal Power Exhaust Performance

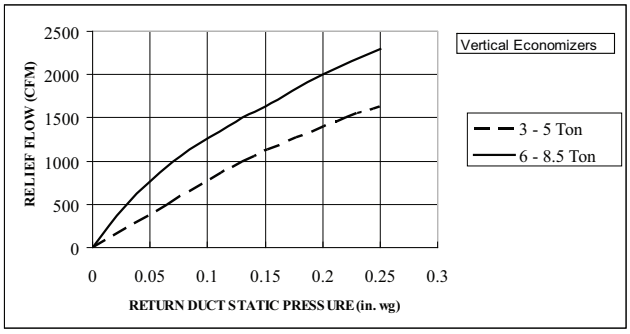

C10616

Fig. 16 - Barometric Relief Flow Capacity

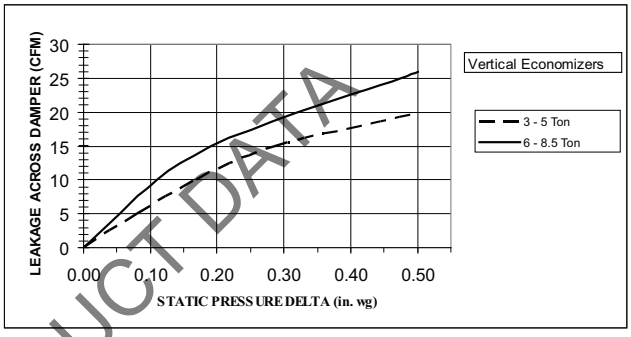

C10617

Fig. 17 - Outdoor Air Damper Leakage

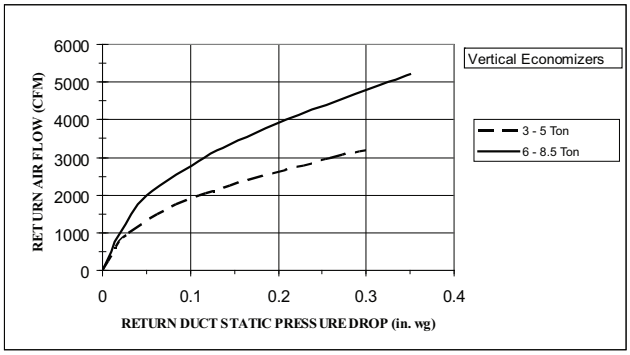

C10618

Fig. 18 - Return Air Pressure Drop

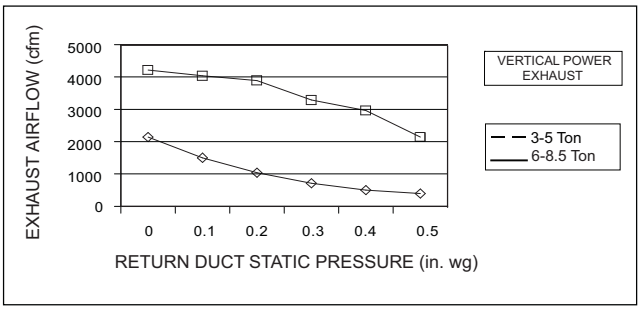

C10619

Fig. 19 - Power Exhaust Performance

ADVANCED PRODUCT DATA

ELECTRICAL INFORMATION

Table 39 – 50HCQA04 **1-Stage Cooling** **3 TONS**

V–Ph–Hz	VOLTAGE RANGE		COMP (ea)		OFM (ea)		IFM				
	MIN	MAX	RLA	LRA	WATTS	FLA	TYPE	Max WATTS	Max AMP Draw	EFF at Full Load	FLA
208–1–60	187	253	16.6	79	190	1.0	DD–STD	980	7.8	84%	7.4
230–1–60	187	253	16.6	79	190	1.0	DD–STD	980	7.8	84%	7.4
208–3–60	187	253	10.4	73	190	1.0	DD–STD	980	7.8	84%	7.4
							MED	2000	5.5	80%	5.2
							HIGH	2000	5.5	80%	5.2
230–3–60	187	253	10.4	73	190	1.0	DD–STD	980	7.8	84%	7.4
							MED	2000	5.5	80%	5.2
							HIGH	2000	5.5	80%	5.2
460–3–60	414	506	5.8	38	190	0.5	DD–STD	980	4.2	84%	4.0
							MED	2000	2.7	80%	2.6
							HIGH	2000	2.7	80%	2.6
575–3–60	518	633	3.8	37	190	0.5	DD–STD	980	4.2	84%	4.0
							MED	2000	2.5	80%	2.4
							HIGH	2000	2.1	80%	2.0

Table 40 – 50HCQA05 **1-Stage Cooling** **4 TONS**

V–Ph–Hz	VOLTAGE RANGE		COMP (ea)		OFM (ea)		IFM				
	MIN	MAX	RLA	LRA	WATTS	FLA	TYPE	Max WATTS	Max AMP Draw	EFF at Full Load	FLA
208–1–60	187	253	19.8	109	325	1.4	DD–STD	980	7.8	84%	7.4
230–1–60	187	253	19.8	109	325	1.4	DD–STD	980	7.8	84%	7.4
208–3–60	187	253	13.1	83	325	1.4	DD–STD	980	7.8	84%	7.4
							MED	2000	5.5	80%	5.2
							HIGH	2000	5.5	80%	5.2
230–3–60	187	253	13.1	83	325	1.4	DD–STD	980	7.8	84%	7.4
							MED	2000	5.5	80%	5.2
							HIGH	2000	5.5	80%	5.2
460–3–60	414	506	6.1	41	325	0.8	DD–STD	980	4.2	84%	4.0
							MED	2000	2.7	80%	2.6
							HIGH	2000	2.7	80%	2.6
575–3–60	518	633	4.4	33	325	0.8	DD–STD	980	4.2	84%	4.0
							MED	2000	2.5	80%	2.4
							HIGH	2000	2.1	80%	2.0

Table 41 – 50HCQA06 **1-Stage Cooling** **5 TONS**

V–Ph–Hz	VOLTAGE RANGE		COMP (ea)		OFM (ea)		IFM				
	MIN	MAX	RLA	LRA	WATTS	FLA	TYPE	Max WATTS	Max AMP Draw	EFF at Full Load	FLA
208–1–60	187	253	25.0	134	325	1.4	DD–STD	980	7.8	84%	7.4
230–1–60	187	253	25.0	134	325	1.4	DD–STD	980	7.8	84%	7.4
208–3–60	187	253	15.9	110	325	1.4	DD–STD	980	7.8	84%	7.4
							MED	2000	5.5	80%	5.2
							HIGH	2770	7.9	81%	7.5
230–3–60	187	253	15.9	110	325	1.4	DD–STD	980	7.8	84%	7.4
							MED	2000	5.5	80%	5.2
							HIGH	2770	7.9	81%	7.5
460–3–60	414	506	7.0	52	325	0.8	DD–STD	980	4.2	84%	4.0
							MED	2000	2.7	80%	2.6
							HIGH	2770	3.6	81%	3.4
575–3–60	518	633	5.1	40	325	0.8	DD–STD	980	4.2	84%	4.0
							MED	2000	2.1	80%	2.0
							HIGH	2770	2.9	81%	2.8

ADVANCED PRODUCT DATA

ELECTRICAL INFORMATION (cont.)

Table 42 – 50HCQA07 **1-Stage Cooling** **6 TONS**

V–Ph–Hz	VOLTAGE RANGE		COMP (ea)		OFM (ea)		IFM				
	MIN	MAX	RLA	LRA	WATTS	FLA	TYPE	Max WATTS	Max AMP Draw	EFF at Full Load	FLA
208–3–60	187	253	19.0	123	325	1.5	STD	1500	5.5	80%	5.2
							MED	3000	7.9	80%	7.5
							HIGH	4200	15.8	80%	15.0
230–3–60	187	253	19.0	123	325	1.5	STD	1600	5.5	80%	5.2
							MED	3100	7.9	80%	7.5
							HIGH	4500	15.8	80%	15.0
460–3–60	414	506	9.7	62	325	0.8	STD	1600	2.7	80%	2.6
							MED	3100	3.6	80%	3.4
							HIGH	4500	7.8	80%	7.4
575–3–60	518	633	7.4	50	325	0.6	STD	1600	2.5	80%	2.4
							MED	3100	2.9	80%	2.8
							HIGH	4500	5.9	80%	5.6

Table 43 – 50HCQD08 **2-Stage Cooling** **7.5 TONS**

V–Ph–Hz	VOLTAGE RANGE		COMP (Cir 1)		COMP (Cir 2)		OFM (ea)		IFM				
	MIN	MAX	RLA	LRA	RLA	LRA	WATTS	FLA	TYPE	Max WATTS	Max AMP Draw	EFF at Full Load	FLA
208–3–60	187	253	13.1	83	13.1	83	325	1.5	STD	1500	5.5	80%	5.2
									MED	1800	5.5	80%	5.2
									HIGH	2600	10.5	81%	10.0
230–3–60	187	253	13.1	83	13.1	83	325	1.5	STD	1600	5.5	80%	5.2
									MED	1900	5.5	80%	5.2
									HIGH	2800	10.5	81%	10.0
460–3–60	414	506	6.1	41	6.1	41	325	0.8	STD	1600	2.7	80%	2.6
									MED	1900	2.7	80%	2.6
									HIGH	2800	4.6	81%	4.4
575–3–60	518	633	4.4	33	4.4	33	325	0.6	STD	1600	2.5	80%	2.4
									MED	1900	2.1	80%	2.0
									HIGH	2800	2.9	81%	2.8

Table 44 – 50HCQD09 **2-Stage Cooling** **8.5 TONS**

V–Ph–Hz	VOLTAGE RANGE		COMP (Cir 1)		COMP (Cir 2)		OFM (ea)		IFM				
	MIN	MAX	RLA	LRA	RLA	LRA	WATTS	FLA	TYPE	Max WATTS	Max AMP Draw	EFF at Full Load	FLA
208–3–60	187	253	16.0	91	13.7	83	325	6.2	STD	1800	5.5	80%	5.2
									MED	3000	7.9	80%	7.5
									HIGH	2600	10.5	81%	10.0
230–3–60	187	253	16.0	91	13.7	83	325	6.2	STD	1900	5.5	80%	5.2
									MED	3100	7.9	80%	7.5
									HIGH	2800	10.5	81%	10.0
460–3–60	414	506	7.0	46	6.2	41	325	3.1	STD	1900	2.7	80%	2.6
									MED	3100	3.6	80%	3.4
									HIGH	2800	4.6	81%	4.4
575–3–60	518	633	5.6	37	4.8	33	325	2.5	STD	1900	2.1	80%	2.0
									MED	3100	2.9	80%	2.8
									HIGH	2800	2.9	81%	2.8

ADVANCED PRODUCT DATA

Table 45 – MCA/MOCP DETERMINATION WITHOUT C.O. OR UNPWRD C.O.

UNIT	NOM. V–PH–HZ	IFM TYPE	ELEC HTR		WITHOUT C.O. or UNPWR C.O.							
					WITHOUT P.E.				WITH P.E. (pwrd fr/unit)			
			NOM (kW)	FLA	MCA	MOCP	DISC. SIZE		MCA	MOCP	DISC. SIZE	
							FLA	LRA			FLA	LRA
50HCQA04	208/230–1–60	DD–STD	–	–	29.2	45	29	88	31.1	45	31	90
			3.3/4.4	15.9/18.3	49.0/52.0	60/60	47/50	104/106	50.9/53.9	60/60	49/52	106/108
			4.9/6.5	23.5/27.1	58.5/63.0	60/70	56/60	112/115	60.4/64.9	70/70	58/62	114/117
			6.5/8.7	31.4/36.3	68.4/74.5	70/80	65/70	119/124	70.3/76.4	80/80	67/73	121/126
			7.9/10.5	37.9/43.8	76.5/83.9	80/90	72/79	126/132	78.4/85.8	80/90	75/81	128/134
			9.8/13.0	46.9/54.2	87.8/96.9	90/100	83/91	182/196	89.7/98.8	90/100	85/93	184/198
	208/230–3–60	DD–STD	–	–	21.4	30	22	82	23.3	30	24	84
			3.3/4.4	9.2/10.6	32.9/34.7	40/40	32/34	91/93	34.8/36.6	40/40	34/36	93/95
			4.9/6.5	13.6/15.6	38.4/40.9	45/45	37/40	96/98	40.3/42.8	45/45	39/42	98/100
			6.5/8.7	18.1/20.9	44.0/47.5	45/50	42/46	100/103	45.9/49.4	50/50	45/48	102/105
			7.9/10.5	21.9/25.3	48.8/53.0	50/60	47/51	104/107	50.7/54.9	60/60	49/53	106/109
			12.0/16.0	33.4/38.5	63.2/69.5	70/70	60/66	115/121	65.1/71.4	70/80	62/68	117/123
		MED	–	–	19.2	25	19	94	21.1	30	21	96
			3.3/4.4	9.2/10.6	30.7/32.5	35/40	30/31	103/105	32.6/34.4	40/40	32/33	105/107
			4.9/6.5	13.6/15.6	36.2/38.7	40/45	35/37	108/110	38.1/40.6	45/45	37/39	110/112
			6.5/8.7	18.1/20.9	41.8/45.3	45/50	40/43	112/115	43.7/47.2	45/50	42/45	114/117
			7.9/10.5	21.9/25.3	46.6/50.8	50/60	44/48	116/119	48.5/52.7	50/60	46/50	118/121
			12.0/16.0	33.4/38.5	61.0/67.3	70/70	58/63	127/133	62.9/69.2	70/70	60/66	129/135
		HIGH	–	–	19.2	25	19	105	21.1	30	21	107
			3.3/4.4	9.2/10.6	30.7/32.5	35/40	30/31	114/116	32.6/34.4	40/40	32/33	116/118
			4.9/6.5	13.6/15.6	36.2/38.7	40/45	35/37	119/121	38.1/40.6	45/45	37/39	121/123
			6.5/8.7	18.1/20.9	41.8/45.3	45/50	40/43	123/126	43.7/47.2	45/50	42/45	125/128
			7.9/10.5	21.9/25.3	46.6/50.8	50/60	44/48	127/130	48.5/52.7	50/60	46/50	129/132
			12.0/16.0	33.4/38.5	61.0/67.3	70/70	58/63	138/144	62.9/69.2	70/70	60/66	140/146
	460–3–60	DD–STD	–	–	11.8	15	12	43	12.8	15	13	44
			6.0	7.2	20.8	25	20	50	21.8	25	21	51
			8.8	10.6	25.0	25	24	54	26.0	30	25	55
			11.5	13.8	29.0	30	28	57	30.0	30	29	58
			14.0	16.8	32.8	35	31	60	33.8	35	32	61
		MED	–	–	10.4	15	10	48	11.4	15	11	49
			6.0	7.2	19.4	20	19	55	20.4	25	20	56
			8.8	10.6	23.6	25	22	59	24.6	25	24	60
			11.5	13.8	27.6	30	26	62	28.6	30	27	63
			14.0	16.8	31.4	35	30	65	32.4	35	31	66
		HIGH	–	–	10.4	15	10	54	11.4	15	11	55
			6.0	7.2	19.4	20	19	61	20.4	25	20	62
			8.8	10.6	23.6	25	22	65	24.6	25	24	66
			11.5	13.8	27.6	30	26	68	28.6	30	27	69
			14.0	16.8	31.4	35	30	71	32.4	35	31	72
	575–3–60	DD–STD	–	–	9.3	15	10	42	11.2	15	12	44
		MED	–	–	7.7	15	8	45	9.6	15	10	47
		HIGH	–	–	7.3	15	7	49	9.2	15	9	51

ADVANCED PRODUCT DATA

LEGEND

C.O.	–	Convenience outlet
DD	–	Electric Drive X13 Motor
DISC	–	Disconnect
FLA	–	Full load amps
IFM	–	Indoor fan motor
LRA	–	Locked rotor amps
MCA	–	Minimum circuit amps
MOCP	–	Maximum over current protection
P.E.	–	Power exhaust
UNPWRD C.O.	–	Unpowered Convenience outlet

NOTES:

1. In compliance with NEC requirements for multimotor and combination load equipment (refer to NEC Articles 430 and 440), the overcurrent protective device for the unit shall be fuse or HACR breaker. Canadian units may be fuse or circuit breaker.
2. **Unbalanced 3-Phase Supply Voltage**
   Never operate a motor where a phase imbalance in supply voltage is greater than 2%. Use the following formula to determine the percentage of voltage imbalance.

$$\text{\% Voltage Imbalance} = 100 \times \frac{\text{max voltage deviation from average voltage}}{\text{average voltage}}$$

Example: Supply voltage is 230-3-60

AB = 224V
BC = 231V
AC = 226V

$$\text{Average Voltage} = \frac{(224 + 231 + 226)}{3} = \frac{681}{3} = 227$$

Determine maximum deviation from average voltage.

(AB) 227 – 224 = 3V Maximum deviation is 4V.

(BC) 231 – 227 = 4V Determine percent of voltage imbalance.

$$\text{\% Voltage Imbalance} = 100 \times \frac{4}{227} = 1.76\%$$

This amount of phase imbalance is satisfactory as it is below the maximum allowable 2%.

IMPORTANT: If the supply voltage phase imbalance is more than 2%, contact your local electric utility company immediately.

ADVANCED PRODUCT DATA

Table 57 – (cont.) MCA/MOCP DETERMINATION WITHOUT C.O. OR UNPWRD C.O.

UNIT	NOM. V–PH–HZ	IFM TYPE	ELEC HTR		WITHOUT C.O. or UNPWR C.O.							
					WITHOUT P.E.				WITH P.E. (pwrd fr/unit)			
			NOM (kW)	FLA	MCA	MOCP	DISC. SIZE		MCA	MOCP	DISC. SIZE	
							FLA	LRA			FLA	LRA
50HCQA05	208/230–1–60	DD–STD	–	–	33.6	50	33	119	35.5	50	35	121
			3.3/4.4	15.9/18.3	53.4/56.4	60/60	51/54	135/137	55.3/58.3	60/60	53/56	137/139
			6.5/8.7	31.4/36.3	72.8/78.9	80/80	69/75	150/155	74.7/80.8	80/90	71/77	152/157
			9.8/13.0	46.9/54.2	92.2/101.3	100/110	87/95	213/227	94.1/103.2	100/110	89/97	215/229
			13.1/17.4	62.8/72.5	112.1/124.2	125/125	105/116	245/264	114.0/126.1	125/150	107/118	247/266
			15.8/21.0	75.8/87.5	128.3/142.9	150/150	120/134	271/294	130.2/144.8	150/150	122/136	273/296
	208/230–3–60	DD–STD	–	–	25.2	30	25	93	27.1	40	27	95
			4.9/6.5	13.6/15.6	42.2/44.7	50/50	41/43	107/109	44.1/46.6	50/50	43/45	109/111
			6.5/8.7	18.1/20.9	47.8/51.3	50/60	46/49	111/114	49.7/53.2	50/60	48/51	113/116
			12.0/16.0	33.4/38.5	66.9/73.3	70/80	64/69	126/132	68.8/75.2	70/80	66/72	128/134
			15.8/21.0	43.8/50.5	79.9/88.3	80/90	76/83	181/194	81.8/90.2	90/100	78/85	183/196
		MED	–	–	23.0	30	23	105	24.9	30	25	107
			4.9/6.5	13.6/15.6	40.0/42.5	45/50	38/41	119/121	41.9/44.4	50/50	40/43	121/123
			6.5/8.7	18.1/20.9	45.6/49.1	50/50	43/47	123/126	47.5/51.0	50/60	46/49	125/128
			12.0/16.0	33.4/38.5	64.7/71.1	70/80	61/67	138/144	66.6/73.0	70/80	63/69	140/146
			15.8/21.0	43.8/50.5	77.7/86.1	80/90	73/81	193/206	79.6/88.0	80/90	75/83	195/208
		HIGH	–	–	23.0	30	23	116	24.9	30	25	118
			4.9/6.5	13.6/15.6	40.0/42.5	45/50	38/41	130/132	41.9/44.4	50/50	40/43	132/134
			6.5/8.7	18.1/20.9	45.6/49.1	50/50	43/47	134/137	47.5/51.0	50/60	46/49	136/139
			12.0/16.0	33.4/38.5	64.7/71.1	70/80	61/67	149/155	66.6/73.0	70/80	63/69	151/157
			15.8/21.0	43.8/50.5	77.7/86.1	80/90	73/81	204/217	79.6/88.0	80/90	75/83	206/219
	460–3–60	DD–STD	–	–	12.4	15	13	47	13.4	15	14	48
			6.0	7.2	21.4	25	21	54	22.4	25	22	55
			11.5	13.8	29.7	30	28	61	30.7	35	30	62
			14.0	16.8	33.4	35	32	64	34.4	35	33	65
			23.0	27.7	47.1	50	44	102	48.1	50	46	103
		MED	–	–	11.0	15	11	52	12.0	15	12	53
			6.0	7.2	20.0	25	19	59	21.0	25	20	60
			11.5	13.8	28.3	30	27	66	29.3	30	28	67
			14.0	16.8	32.0	35	30	69	33.0	35	31	70
			23.0	27.7	45.7	50	43	107	46.7	50	44	108
		HIGH	–	–	11.0	15	11	58	12.0	15	12	59
			6.0	7.2	20.0	25	19	65	21.0	25	20	66
			11.5	13.8	28.3	30	27	72	29.3	30	28	73
			14.0	16.8	32.0	35	30	75	33.0	35	31	76
			23.0	27.7	45.7	50	43	113	46.7	50	44	114
	575–3–60	DD–STD	–	–	10.3	15	11	39	12.2	15	13	41
		MED	–	–	8.7	15	9	42	10.6	15	11	44
		HIGH	–	–	8.3	15	8	46	10.2	15	10	48

ADVANCED PRODUCT DATA

Table 57 – (cont.) MCA/MOCP DETERMINATION WITHOUT C.O. OR UNPWRD C.O.

UNIT	NOM. V–PH–HZ	IFM TYPE	ELEC HTR		WITHOUT C.O. or UNPWR C.O.							
					WITHOUT P.E.				WITH P.E. (pwrd fr/unit)			
			NOM (kW)	FLA	MCA	MOCP	DISC. SIZE		MCA	MOCP	DISC. SIZE	
							FLA	LRA			FLA	LRA
50HCQA06	208/230–1–60	DD–STD	–	–	40.1	60	39	144	42.0	60	41	146
			4.9/6.5	23.5/27.1	69.4/73.9	80/80	66/70	168/171	71.3/75.8	80/80	68/72	170/173
			6.5/8.7	31.4/36.3	79.3/85.4	80/100	75/81	175/180	81.2/87.3	90/100	77/83	177/182
			9.8/13.0	46.9/54.2	98.7/107.8	100/110	93/101	238/252	100.6/109.7	110/110	95/103	240/254
			13.1/17.4	62.8/72.5	118.6/130.7	125/150	111/122	270/289	120.5/132.6	125/150	113/124	272/291
			15.8/21.0	75.8/87.5	134.8/149.4	150/150	126/139	296/319	136.7/151.3	150/175	128/142	298/321
	208/230–3–60	DD–STD	–	–	28.7	40	28	120	30.6	45	31	122
			4.9/6.5	13.6/15.6	45.7/48.2	50/60	44/46	134/136	47.6/50.1	60/60	46/49	136/138
			7.9/10.5	21.9/25.3	56.1/60.3	60/70	54/58	142/145	58.0/62.2	60/70	56/60	144/147
			12.0/16.0	33.4/38.5	70.4/76.8	80/80	67/73	153/159	72.3/78.7	80/80	69/75	155/161
			15.8/21.0	43.8/50.5	83.4/91.8	90/100	79/86	208/221	85.3/93.7	90/100	81/89	210/223
			19.9/26.5	55.2/63.8	97.7/108.4	100/110	92/102	230/248	99.6/110.3	100/125	94/104	232/250
		MED	–	–	26.5	40	26	143	28.4	40	28	145
			4.9/6.5	13.6/15.6	43.5/46.0	50/50	42/44	157/159	45.4/47.9	50/50	44/46	159/161
			7.9/10.5	21.9/25.3	53.9/58.1	60/60	51/55	165/168	55.8/60.0	60/60	53/57	167/170
			12.0/16.0	33.4/38.5	68.2/74.6	70/80	64/70	176/182	70.1/76.5	80/80	66/72	178/184
			15.8/21.0	43.8/50.5	81.2/89.6	90/90	76/84	231/244	83.1/91.5	90/100	78/86	233/246
			19.9/26.5	55.2/63.8	95.5/106.2	100/110	89/99	253/271	97.4/108.1	100/110	92/101	255/273
		HIGH	–	–	28.8	40	29	169	30.7	45	31	171
			4.9/6.5	13.6/15.6	45.8/48.3	50/60	44/46	183/185	47.7/50.2	60/60	46/49	185/187
			7.9/10.5	21.9/25.3	56.2/60.4	60/70	54/58	191/194	58.1/62.3	60/70	56/60	193/196
			12.0/16.0	33.4/38.5	70.5/76.9	80/80	67/73	202/208	72.4/78.8	80/80	69/75	204/210
			15.8/21.0	43.8/50.5	83.5/91.9	90/100	79/87	257/270	85.4/93.8	90/100	81/89	259/272
			19.9/26.5	55.2/63.8	97.8/108.5	100/110	92/102	279/297	99.7/110.4	100/125	94/104	281/299
	460–3–60	DD–STD	–	–	13.6	20	14	58	14.6	20	15	59
			6.0	7.2	22.6	25	22	65	23.6	25	23	66
			11.5	13.8	30.8	35	29	72	31.8	35	31	73
			14.0	16.8	34.6	35	33	75	35.6	40	34	76
			23.0	27.7	48.2	50	45	113	49.2	50	47	114
			25.5	30.7	51.9	60	49	119	52.9	60	50	120
		MED	–	–	12.2	15	12	69	13.2	20	13	70
			6.0	7.2	21.2	25	20	76	22.2	25	21	77
			11.5	13.8	29.4	30	28	83	30.4	35	29	84
			14.0	16.8	33.2	35	31	86	34.2	35	32	87
			23.0	27.7	46.8	50	44	124	47.8	50	45	125
			25.5	30.7	50.5	60	47	130	51.5	60	48	131
		HIGH	–	–	13.0	15	13	82	14.0	20	14	83
			6.0	7.2	22.0	25	21	89	23.0	25	22	90
			11.5	13.8	30.2	35	29	96	31.2	35	30	97
			14.0	16.8	34.0	35	32	99	35.0	35	33	100
			23.0	27.7	47.6	50	45	137	48.6	50	46	138
			25.5	30.7	51.3	60	48	143	52.3	60	49	144
	575–3–60	DD–STD	–	–	11.2	15	11	46	13.1	15	14	48
		MED	–	–	9.2	15	9	53	11.1	15	11	55
		HIGH	–	–	10.0	15	10	64	11.9	15	12	66

ADVANCED PRODUCT DATA

Table 57 – (cont.) MCA/MOCP DETERMINATION WITHOUT C.O. OR UNPWRD C.O.

UNIT	NOM. V–PH–HZ	IFM TYPE	ELEC HTR		WITHOUT C.O. or UNPWR C.O.							
					WITHOUT P.E.				WITH P.E. (pwrd fr/unit)			
			Nom (kW)	FLA	MCA	MOCP	DISC. SIZE		MCA	MOCP	DISC. SIZE	
							FLA	LRA			FLA	LRA
50HCQA07	208/230–3–60	STD	–	–	32.0	50	31	148	35.8	50	36	152
			4.9/6.5	13.6/15.6	49.0/51.5	60/60	47/49	162/164	52.8/55.3	60/60	51/54	166/168
			7.8/10.4	21.7/25.0	59.1/63.2	60/70	56/60	170/173	62.9/67.0	70/70	61/64	174/177
			12.0/16.0	33.4/38.5	73.7/80.1	80/90	70/76	181/187	77.5/83.9	80/90	74/80	185/191
			15.8/21.0	43.8/50.5	86.7/95.1	90/100	82/89	236/249	90.5/98.9	100/100	86/94	240/253
			19.9/26.5	55.2/63.8	101.0/111.7	110/125	95/105	258/276	104.8/115.5	110/125	99/109	262/280
		MED	–	–	34.3	50	34	185	38.1	50	38	189
			4.9/6.5	13.6/15.6	51.3/53.8	60/60	50/52	199/201	55.1/57.6	60/60	54/56	203/205
			7.8/10.4	21.7/25.0	61.4/65.5	70/70	59/63	207/210	65.2/69.3	70/80	63/67	211/214
			12.0/16.0	33.4/38.5	76.0/82.4	80/90	72/78	218/224	79.8/86.2	80/90	77/83	222/228
			15.8/21.0	43.8/50.5	89.0/97.4	90/100	84/92	273/286	92.8/101.2	100/110	89/96	277/290
			19.9/26.5	55.2/63.8	103.3/114.0	110/125	97/107	295/313	107.1/117.8	110/125	102/112	299/317
		HIGH	–	–	41.8	60	43	211	45.6	60	47	215
			4.9/6.5	13.6/15.6	58.8/61.3	70/70	58/60	225/227	62.6/65.1	70/80	63/65	229/231
			7.8/10.4	21.7/25.0	68.9/73.0	80/80	68/71	233/236	72.7/76.8	80/80	72/76	237/240
			12.0/16.0	33.4/38.5	83.5/89.9	90/90	81/87	244/250	87.3/93.7	90/100	85/91	248/254
			15.8/21.0	43.8/50.5	96.5/104.9	100/110	93/101	299/312	100.3/108.7	110/110	97/105	303/316
			19.9/26.5	55.2/63.8	110.8/121.5	125/125	106/116	321/339	114.6/125.3	125/150	110/120	325/343
	460–3–60	STD	–	–	16.3	25	16	75	18.1	25	18	77
			6.0	7.2	25.3	30	24	82	27.1	30	26	84
			11.5	13.8	33.6	35	32	89	35.4	40	34	91
			14.0	16.8	37.3	40	35	92	39.1	40	37	94
			23.0	27.7	51.0	60	48	103	52.8	60	50	105
			25.5	30.7	54.7	60	51	106	56.5	60	53	108
		MED	–	–	17.1	25	17	94	18.9	25	19	96
			6.0	7.2	26.1	30	25	101	27.9	30	27	103
			11.5	13.8	34.4	40	33	108	36.2	40	35	110
			14.0	16.8	38.1	40	36	111	39.9	45	38	113
			23.0	27.7	51.8	60	49	122	53.6	60	51	124
			25.5	30.7	55.5	60	52	125	57.3	60	54	127
		HIGH	–	–	21.1	30	22	107	22.9	30	24	109
			6.0	7.2	30.1	35	30	114	31.9	35	32	116
			11.5	13.8	38.4	40	37	121	40.2	45	39	123
			14.0	16.8	42.1	45	41	124	43.9	45	43	126
			23.0	27.7	55.8	60	53	135	57.6	60	55	137
			25.5	30.7	59.5	60	57	138	61.3	70	59	140
	575–3–60	STD	–	–	12.9	20	13	61	16.7	20	17	65
		MED	–	–	13.3	20	13	76	17.1	20	17	80
		HIGH	–	–	16.1	20	16	90	19.9	25	21	94

ADVANCED PRODUCT DATA

Table 57 - (cont.) MCA/MOCP DETERMINATION WITHOUT C.O. OR UNPWRD C.O.

UNIT	NOM. V–PH–HZ	IFM TYPE	ELEC HTR		WITHOUT C.O. or UNPWR C.O.							
					WITHOUT P.E.				WITH P.E. (pwrd fr/unit)			
			Nom (kW)	FLA	MCA	MOCP	DISC. SIZE		MCA	MOCP	DISC. SIZE	
							FLA	LRA			FLA	LRA
50HCQD08	208/230–3–60	STD	–	–	37.7	50	40	191	41.5	50	44	195
			7.8/10.4	21.7/25.0	64.8/68.9	70/70	65/68	213/216	68.6/72.7	70/80	69/73	217/220
			12.0/16.0	33.4/38.5	79.4/85.8	80/90	78/84	224/230	83.2/89.6	90/90	82/88	228/234
			18.6/24.8	51.7/59.7	102.3/112.3	110/125	99/108	243/251	106.1/116.1	110/125	103/113	247/255
			24.0/32.0	66.7/77.0	121.1/133.9	125/150	116/128	258/268	124.9/137.7	125/150	121/132	262/272
			31.8/42.4	88.4/102.0	148.2/165.2	150/175	141/157	368/395	152.0/169.0	175/175	146/161	372/399
		MED	–	–	37.7	50	40	202	41.5	50	44	206
			7.8/10.4	21.7/25.0	64.8/68.9	70/70	65/68	224/227	68.6/72.7	70/80	69/73	228/231
			12.0/16.0	33.4/38.5	79.4/85.8	80/90	78/84	235/241	83.2/89.6	90/90	82/88	239/245
			18.6/24.8	51.7/59.7	102.3/112.3	110/125	99/108	254/262	106.1/116.1	110/125	103/113	258/266
			24.0/32.0	66.7/77.0	121.1/133.9	125/150	116/128	269/279	124.9/137.7	125/150	121/132	273/283
			31.8/42.4	88.4/102.0	148.2/165.2	150/175	141/157	379/406	152.0/169.0	175/175	146/161	383/410
		HIGH	–	–	42.5	50	45	245	46.3	50	49	249
			7.8/10.4	21.7/25.0	69.6/73.7	70/80	70/74	267/270	73.4/77.5	80/80	74/78	271/274
			12.0/16.0	33.4/38.5	84.2/90.6	90/100	83/89	278/284	88.0/94.4	90/100	88/94	282/288
			18.6/24.8	51.7/59.7	107.1/117.1	110/125	105/114	297/305	110.9/120.9	125/125	109/118	301/309
			24.0/32.0	66.7/77.0	125.9/138.7	150/150	122/134	312/322	129.7/142.5	150/150	126/138	316/326
			31.8/42.4	88.4/102.0	153.0/170.0	175/175	147/162	422/449	156.8/173.8	175/175	151/167	426/453
	460–3–60	STD	–	–	17.9	20	19	95	19.7	25	21	97
			13.9	16.7	38.8	40	38	112	40.6	45	40	114
			16.5	19.8	42.7	45	42	115	44.5	45	44	117
			27.8	33.4	59.7	60	57	128	61.5	70	59	130
			33.0	39.7	67.6	70	65	135	69.4	70	67	137
			41.7	50.2	80.7	90	77	195	82.5	90	79	197
		MED	–	–	17.9	20	19	101	19.7	25	21	103
			13.9	16.7	38.8	40	38	118	40.6	45	40	120
			16.5	19.8	42.7	45	42	121	44.5	45	44	123
			27.8	33.4	59.7	60	57	134	61.5	70	59	136
			33.0	39.7	67.6	70	65	141	69.4	70	67	143
			41.7	50.2	80.7	90	77	201	82.5	90	79	203
		HIGH	–	–	19.7	25	21	123	21.5	25	23	125
			13.9	16.7	40.6	45	40	140	42.4	45	42	142
			16.5	19.8	44.5	45	44	143	46.3	50	46	145
			27.8	33.4	61.5	70	59	156	63.3	70	61	158
			33.0	39.7	69.4	70	67	163	71.2	80	69	165
			41.7	50.2	82.5	90	79	223	84.3	90	81	225
	575–3–60	STD	–	–	13.5	15	14	77	17.3	20	19	81
			17.0	20.4	39.0	40	38	97	42.8	45	42	101
			34.0	40.9	64.6	70	61	118	68.4	70	66	122
		MED	–	–	13.1	15	14	81	16.9	20	18	85
			17.0	20.4	38.6	40	37	101	42.4	45	42	105
			34.0	40.9	64.2	70	61	122	68.0	70	65	126
		HIGH	–	–	13.9	20	15	92	17.7	20	19	96
			17.0	20.4	39.4	40	38	112	43.2	45	43	116
			34.0	40.9	65.0	70	62	133	68.8	70	66	137

ADVANCED PRODUCT DATA

Table 57 - (cont.) MCA/MOCP DETERMINATION WITHOUT C.O. OR UNPWRD C.O.

UNIT	NOM. V–PH–HZ	IFM TYPE	ELEC HTR		WITHOUT C.O. or UNPWR C.O.							
					WITHOUT P.E.				WITH P.E. (pwrd fr/unit)			
			Nom (kW)	FLA	MCA	MOCP	DISC. SIZE FLA	DISC. SIZE LRA	MCA	MOCP	DISC. SIZE FLA	DISC. SIZE LRA
50HCQD09	208/230–3–60	STD	–	–	45.1	60	47	225	48.9	60	52	229
			7.8/10.4	21.7/25.0	72.2/76.4	80/80	72/76	247/250	76.0/80.2	80/90	77/80	251/254
			12.0/16.0	33.4/38.5	86.9/93.2	90/100	86/92	258/264	90.7/97.0	100/100	90/96	262/268
			18.6/24.8	51.7/59.7	109.7/119.7	110/125	107/116	277/285	113.5/123.5	125/125	111/120	281/289
			24.0/32.0	66.7/77.0	128.5/141.4	150/150	124/136	292/302	132.3/145.2	150/150	128/140	296/306
			31.8/42.4	88.4/102.0	155.6/172.6	175/175	149/165	402/429	159.4/176.4	175/200	153/169	406/433
		MED	–	–	47.4	60	50	262	51.2	60	54	266
			7.8/10.4	21.7/25.0	74.5/78.7	80/80	75/79	284/287	78.3/82.5	80/90	79/83	288/291
			12.0/16.0	33.4/38.5	89.2/95.5	90/100	88/94	295/301	93.0/99.3	100/100	93/99	299/305
			18.6/24.8	51.7/59.7	112.0/122.0	125/125	109/119	314/322	115.8/125.8	125/150	114/123	318/326
			24.0/32.0	66.7/77.0	130.8/143.7	150/150	127/138	329/339	134.6/147.5	150/150	131/143	333/343
			31.8/42.4	88.4/102.0	157.9/174.9	175/175	152/167	439/466	161.7/178.7	175/200	156/172	443/470
		HIGH	–	–	49.9	60	53	279	53.7	60	57	283
			7.8/10.4	21.7/25.0	77.0/81.2	80/90	78/82	301/304	80.8/85.0	90/90	82/86	305/308
			12.0/16.0	33.4/38.5	91.7/98.0	100/100	91/97	312/318	95.5/101.8	100/110	96/101	316/322
			18.6/24.8	51.7/59.7	114.5/124.5	125/125	112/121	331/339	118.3/128.3	125/150	117/126	335/343
			24.0/32.0	66.7/77.0	133.3/146.2	150/150	129/141	346/356	137.1/150.0	150/150	134/146	350/360
			31.8/42.4	88.4/102.0	160.4/177.4	175/200	154/170	456/483	164.2/181.2	175/200	159/174	460/487
	460–3–60	STD	–	–	20.7	25	22	112	22.5	25	24	114
			13.9	16.7	41.5	45	41	129	43.3	45	43	131
			16.5	19.8	45.4	50	45	132	47.2	50	47	134
			27.8	33.4	62.4	70	60	145	64.2	70	62	147
			33.0	39.7	70.3	80	67	152	72.1	80	69	154
			41.7	50.2	83.4	90	79	212	85.2	90	82	214
		MED	–	–	21.5	25	23	131	23.3	30	25	133
			13.9	16.7	42.3	45	42	148	44.1	45	44	150
			16.5	19.8	46.2	50	45	151	48.0	50	47	153
			27.8	33.4	63.2	70	61	164	65.0	70	63	166
			33.0	39.7	71.1	80	68	171	72.9	80	70	173
			41.7	50.2	84.2	90	80	231	86.0	90	82	233
		HIGH	–	–	22.5	25	24	140	24.3	30	26	142
			13.9	16.7	43.3	45	43	157	45.1	50	45	159
			16.5	19.8	47.2	50	47	160	49.0	50	49	162
			27.8	33.4	64.2	70	62	173	66.0	70	64	175
			33.0	39.7	72.1	80	69	180	73.9	80	72	182
			41.7	50.2	85.2	90	82	240	87.0	90	84	242
	575–3–60	STD	–	–	16.3	20	17	97	20.1	25	22	101
			17.0	20.4	41.8	45	41	117	45.6	50	45	121
			34.0	40.9	67.4	70	64	138	71.2	80	69	142
		MED	–	–	17.1	20	18	108	20.9	25	22	112
			17.0	20.4	42.6	45	42	128	46.4	50	46	132
			34.0	40.9	68.2	70	65	149	72.0	80	69	153
		HIGH	–	–	17.1	20	18	108	20.9	25	22	112
			17.0	20.4	42.6	45	42	128	46.4	50	46	132
			34.0	40.9	68.2	70	65	149	72.0	80	69	153

ADVANCED PRODUCT DATA

Table 46 – MCA/MOCP DETERMINATION WITH PWRD C.O.

UNIT	NOM. V–PH–HZ	IFM TYPE	ELEC HTR		WITH PWRD C.O.							
					WITHOUT P.E.				WITH P.E. (pwrd fr/unit)			
			Nom (kW)	FLA	MCA	MOCP	DISC. SIZE FLA	DISC. SIZE LRA	MCA	MOCP	DISC. SIZE FLA	DISC. SIZE LRA
50HCQA04	208/230–1–60	DD–STD	–	–	34.0	50	34	93	35.9	50	36	95
			3.3/4.4	15.9/18.3	53.8/56.8	60/60	53/55	109/111	55.7/58.7	60/60	55/58	111/113
			4.9/6.5	23.5/27.1	63.3/67.8	70/70	61/65	117/120	65.2/69.7	70/70	63/68	119/122
			6.5/8.7	31.4/36.3	73.2/79.3	80/80	70/76	124/129	75.1/81.2	80/90	73/78	126/131
			7.9/10.5	37.9/43.8	81.3/88.7	90/90	78/85	131/137	83.2/90.6	90/100	80/87	133/139
			9.8/13.0	46.9/54.2	92.6/101.7	100/110	88/97	187/201	94.5/103.6	100/110	90/99	189/203
	208/230–3–60	DD–STD	–	–	26.2	30	27	87	28.1	35	29	89
			3.3/4.4	9.2/10.6	37.7/39.5	45/45	38/39	96/98	39.6/41.4	45/45	40/42	98/100
			4.9/6.5	13.6/15.6	43.2/45.7	50/50	43/45	101/103	45.1/47.6	50/50	45/47	103/105
			6.5/8.7	18.1/20.9	48.8/52.3	50/60	48/51	105/108	50.7/54.2	60/60	50/53	107/110
			7.9/10.5	21.9/25.3	53.6/57.8	60/60	52/56	109/112	55.5/59.7	60/60	55/58	111/114
			12.0/16.0	33.4/38.5	68.0/74.3	70/80	66/71	120/126	69.9/76.2	70/80	68/74	122/128
		MED	–	–	24.0	30	25	99	25.9	30	27	101
			3.3/4.4	9.2/10.6	35.5/37.3	40/45	35/37	108/110	37.4/39.2	45/45	37/39	110/112
			4.9/6.5	13.6/15.6	41.0/43.5	45/50	40/43	113/115	42.9/45.4	45/50	42/45	115/117
			6.5/8.7	18.1/20.9	46.6/50.1	50/60	45/49	117/120	48.5/52.0	50/60	48/51	119/122
			7.9/10.5	21.9/25.3	51.4/55.6	60/60	50/54	121/124	53.3/57.5	60/60	52/56	123/126
			12.0/16.0	33.4/38.5	65.8/72.1	70/80	63/69	132/138	67.7/74.0	70/80	65/71	134/140
		HIGH	–	–	24.0	30	25	110	25.9	30	27	112
			3.3/4.4	9.2/10.6	35.5/37.3	40/45	35/37	119/121	37.4/39.2	45/45	37/39	121/123
			4.9/6.5	13.6/15.6	41.0/43.5	45/50	40/43	124/126	42.9/45.4	45/50	42/45	126/128
			6.5/8.7	18.1/20.9	46.6/50.1	50/60	45/49	128/131	48.5/52.0	50/60	48/51	130/133
			7.9/10.5	21.9/25.3	51.4/55.6	60/60	50/54	132/135	53.3/57.5	60/60	52/56	134/137
			12.0/16.0	33.4/38.5	65.8/72.1	70/80	63/69	143/149	67.7/74.0	70/80	65/71	145/151
	460–3–60	DD–STD	–	–	14.0	20	14	45	15.0	20	16	46
			6.0	7.2	23.0	25	23	52	24.0	25	24	53
			8.8	10.6	27.2	30	27	56	28.2	30	28	57
			11.5	13.8	31.2	35	30	59	32.2	35	31	60
			14.0	16.8	35.0	35	34	62	36.0	40	35	63
		MED	–	–	12.6	15	13	50	13.6	20	14	51
			6.0	7.2	21.6	25	21	57	22.6	25	22	58
			8.8	10.6	25.8	30	25	61	26.8	30	26	62
			11.5	13.8	29.8	30	29	64	30.8	35	30	65
			14.0	16.8	33.6	35	32	67	34.6	35	33	68
		HIGH	–	–	12.6	15	13	56	13.6	20	14	57
			6.0	7.2	21.6	25	21	63	22.6	25	22	64
			8.8	10.6	25.8	30	25	67	26.8	30	26	68
			11.5	13.8	29.8	30	29	70	30.8	35	30	71
			14.0	16.8	33.6	35	32	73	34.6	35	33	74
	575–3–60	DD–STD	–	–	11.0	15	12	44	12.9	15	14	46
		MED	–	–	9.4	15	10	47	11.3	15	12	49
		HIGH	–	–	9.0	15	9	51	10.9	15	11	53

ADVANCED PRODUCT DATA

Table 46 – (cont.) MCA/MOCP DETERMINATION WITH PWRD C.O.

UNIT	NOM. V–PH–HZ	IFM TYPE	ELEC HTR		WITH PWRD C.O.							
					WITHOUT P.E.				WITH P.E. (pwrd fr/unit)			
			Nom (kW)	FLA	MCA	MOCP	DISC. SIZE		MCA	MOCP	DISC. SIZE	
							FLA	LRA			FLA	LRA
50HCQA05	208/230–1–60	DD–STD	–	–	38.4	50	38	124	40.3	60	41	126
			3.3/4.4	15.9/18.3	58.2/61.2	60/70	57/59	140/142	60.1/63.1	70/70	59/62	142/144
			6.5/8.7	31.4/36.3	77.6/83.7	80/90	75/80	155/160	79.5/85.6	80/90	77/82	157/162
			9.8/13.0	46.9/54.2	97.0/106.1	100/110	92/101	218/232	98.9/108.0	100/110	95/103	220/234
			13.1/17.4	62.8/72.5	116.9/129.0	125/150	111/122	250/269	118.8/130.9	125/150	113/124	252/271
			15.8/21.0	75.8/87.5	133.1/147.7	150/150	126/139	276/299	135.0/149.6	150/150	128/141	278/301
	208/230–3–60	DD–STD	–	–	30.0	40	31	98	31.9	40	33	100
			4.9/6.5	13.6/15.6	47.0/49.5	50/50	46/49	112/114	48.9/51.4	50/60	49/51	114/116
			6.5/8.7	18.1/20.9	52.6/56.1	60/60	52/55	116/119	54.5/58.0	60/60	54/57	118/121
			12.0/16.0	33.4/38.5	71.7/78.1	80/80	69/75	131/137	73.6/80.0	80/90	71/77	133/139
			15.8/21.0	43.8/50.5	84.7/93.1	90/100	81/89	186/199	86.6/95.0	90/100	83/91	188/201
		MED	–	–	27.8	40	28	110	29.7	40	30	112
			4.9/6.5	13.6/15.6	44.8/47.3	50/50	44/46	124/126	46.7/49.2	50/50	46/48	126/128
			6.5/8.7	18.1/20.9	50.4/53.9	60/60	49/52	128/131	52.3/55.8	60/60	51/54	130/133
			12.0/16.0	33.4/38.5	69.5/75.9	70/80	67/72	143/149	71.4/77.8	80/80	69/75	145/151
			15.8/21.0	43.8/50.5	82.5/90.9	90/100	79/86	198/211	84.4/92.8	90/100	81/88	200/213
		HIGH	–	–	27.8	40	28	121	29.7	40	30	123
			4.9/6.5	13.6/15.6	44.8/47.3	50/50	44/46	135/137	46.7/49.2	50/50	46/48	137/139
			6.5/8.7	18.1/20.9	50.4/53.9	60/60	49/52	139/142	52.3/55.8	60/60	51/54	141/144
			12.0/16.0	33.4/38.5	69.5/75.9	70/80	67/72	154/160	71.4/77.8	80/80	69/75	156/162
			15.8/21.0	43.8/50.5	82.5/90.9	90/100	79/86	209/222	84.4/92.8	90/100	81/88	211/224
	460–3–60	DD–STD	–	–	14.6	20	15	49	15.6	20	16	50
			6.0	7.2	23.6	25	23	56	24.6	25	24	57
			11.5	13.8	31.9	35	31	63	32.9	35	32	64
			14.0	16.8	35.6	40	34	66	36.6	40	36	67
			23.0	27.7	49.3	50	47	104	50.3	60	48	105
		MED	–	–	13.2	15	13	54	14.2	20	15	55
			6.0	7.2	22.2	25	22	61	23.2	25	23	62
			11.5	13.8	30.5	35	29	68	31.5	35	30	69
			14.0	16.8	34.2	35	33	71	35.2	40	34	72
			23.0	27.7	47.9	50	45	109	48.9	50	46	110
		HIGH	–	–	13.2	15	13	60	14.2	20	15	61
			6.0	7.2	22.2	25	22	67	23.2	25	23	68
			11.5	13.8	30.5	35	29	74	31.5	35	30	75
			14.0	16.8	34.2	35	33	77	35.2	40	34	78
			23.0	27.7	47.9	50	45	115	48.9	50	46	116
	575–3–60	DD–STD	–	–	12.0	15	13	41	13.9	20	15	43
		MED	–	–	10.4	15	11	44	12.3	15	13	46
		HIGH	–	–	10.0	15	10	48	11.9	15	12	50

ADVANCED PRODUCT DATA

Table 46 – (cont.) MCA/MOCP DETERMINATION WITH PWRD C.O.

UNIT	NOM. V–PH–HZ	IFM TYPE	ELEC HTR		WITH PWRD C.O.							
					WITHOUT P.E.				WITH P.E. (pwrd fr/unit)			
			Nom (kW)	FLA	MCA	MOCP	DISC. SIZE FLA	DISC. SIZE LRA	MCA	MOCP	DISC. SIZE FLA	DISC. SIZE LRA
50HCQA06	208/230–1–60	DD–STD	–	–	44.9	60	44	149	46.8	60	47	151
			4.9/6.5	23.5/27.1	74.2/78.7	80/80	71/76	173/176	76.1/80.6	80/90	74/78	175/178
			6.5/8.7	31.4/36.3	84.1/90.2	100/100	81/86	180/185	86.0/92.1	100/100	83/88	182/187
			9.8/13.0	46.9/54.2	103.5/112.6	110/125	98/107	243/257	105.4/114.5	110/125	101/109	245/259
			13.1/17.4	62.8/72.5	123.4/135.5	125/150	117/128	275/294	125.3/137.4	150/150	119/130	277/296
			15.8/21.0	75.8/87.5	139.6/154.2	150/175	132/145	301/324	141.5/156.1	150/175	134/147	303/326
	208/230–3–60	DD–STD	–	–	33.5	45	34	125	35.4	50	36	127
			4.9/6.5	13.6/15.6	50.5/53.0	60/60	50/52	139/141	52.4/54.9	60/60	52/54	141/143
			7.9/10.5	21.9/25.3	60.9/65.1	70/70	59/63	147/150	62.8/67.0	70/70	61/65	149/152
			12.0/16.0	33.4/38.5	75.2/81.6	80/90	72/78	158/164	77.1/83.5	80/90	75/80	160/166
			15.8/21.0	43.8/50.5	88.2/96.6	90/100	84/92	213/226	90.1/98.5	100/100	86/94	215/228
			19.9/26.5	55.2/63.8	102.5/113.2	110/125	97/107	235/253	104.4/115.1	110/125	100/109	237/255
		MED	–	–	31.3	45	31	148	33.2	45	34	150
			4.9/6.5	13.6/15.6	48.3/50.8	60/60	47/49	162/164	50.2/52.7	60/60	49/52	164/166
			7.9/10.5	21.9/25.3	58.7/62.9	60/70	57/60	170/173	60.6/64.8	70/70	59/63	172/175
			12.0/16.0	33.4/38.5	73.0/79.4	80/80	70/76	181/187	74.9/81.3	80/90	72/78	183/189
			15.8/21.0	43.8/50.5	86.0/94.4	90/100	82/89	236/249	87.9/96.3	90/100	84/92	238/251
			19.9/26.5	55.2/63.8	100.3/111.0	110/125	95/105	258/276	102.2/112.9	110/125	97/107	260/278
		HIGH	–	–	33.6	45	34	174	35.5	50	36	176
			4.9/6.5	13.6/15.6	50.6/53.1	60/60	50/52	188/190	52.5/55.0	60/60	52/54	190/192
			7.9/10.5	21.9/25.3	61.0/65.2	70/70	59/63	196/199	62.9/67.1	70/70	61/65	198/201
			12.0/16.0	33.4/38.5	75.3/81.7	80/90	72/78	207/213	77.2/83.6	80/90	75/81	209/215
			15.8/21.0	43.8/50.5	88.3/96.7	90/100	84/92	262/275	90.2/98.6	100/100	87/94	264/277
			19.9/26.5	55.2/63.8	102.6/113.3	110/125	98/107	284/302	104.5/115.2	110/125	100/110	286/304
	460–3–60	DD–STD	–	–	15.8	20	16	60	16.8	20	17	61
			6.0	7.2	24.8	25	24	67	25.8	30	26	68
			11.5	13.8	33.0	35	32	74	34.0	35	33	75
			14.0	16.8	36.8	40	35	77	37.8	40	37	78
			23.0	27.7	50.4	60	48	115	51.4	60	49	116
			25.5	30.7	54.1	60	51	121	55.1	60	53	122
		MED	–	–	14.4	20	14	71	15.4	20	16	72
			6.0	7.2	23.4	25	23	78	24.4	25	24	79
			11.5	13.8	31.6	35	30	85	32.6	35	32	86
			14.0	16.8	35.4	40	34	88	36.4	40	35	89
			23.0	27.7	49.0	50	46	126	50.0	50	47	127
			25.5	30.7	52.7	60	50	132	53.7	60	51	133
		HIGH	–	–	15.2	20	15	84	16.2	20	17	85
			6.0	7.2	24.2	25	24	91	25.2	30	25	92
			11.5	13.8	32.4	35	31	98	33.4	35	32	99
			14.0	16.8	36.2	40	35	101	37.2	40	36	102
			23.0	27.7	49.8	50	47	139	50.8	60	48	140
			25.5	30.7	53.5	60	51	145	54.5	60	52	146
	575–3–60	DD–STD	–	–	12.9	15	13	48	14.8	20	16	50
		MED	–	–	10.9	15	11	55	12.8	15	13	57
		HIGH	–	–	11.7	15	12	66	13.6	15	14	68

ADVANCED PRODUCT DATA

Table 46 – (cont.) MCA/MOCP DETERMINATION WITH PWRD C.O.

UNIT	NOM. V–PH–HZ	IFM TYPE	ELEC HTR		WITH PWRD C.O.							
					NO P.E.				WITH P.E. (pwrd fr/unit)			
			Nom (kW)	FLA	MCA	MOCP	DISC. SIZE FLA	DISC. SIZE LRA	MCA	MOCP	DISC. SIZE FLA	DISC. SIZE LRA
50HCQA07	208/230–3–60	STD	–	–	36.8	50	37	153	40.6	50	41	157
			4.9/6.5	13.6/15.6	53.8/56.3	60/60	52/55	167/169	57.6/60.1	60/70	57/59	171/173
			7.8/10.4	21.7/25.0	63.9/68.0	70/80	62/66	175/178	67.7/71.8	80/80	66/70	179/182
			12.0/16.0	33.4/38.5	78.5/84.9	80/90	75/81	186/192	82.3/88.7	90/90	80/85	190/196
			15.8/21.0	43.8/50.5	91.5/99.9	100/100	87/95	241/254	95.3/103.7	100/110	92/99	245/258
			19.9/26.5	55.2/63.8	105.8/116.5	110/125	100/110	263/281	109.6/120.3	110/125	105/115	267/285
		MED	–	–	39.1	50	39	190	42.9	60	44	194
			4.9/6.5	13.6/15.6	56.1/58.6	60/60	55/57	204/206	59.9/62.4	70/70	59/62	208/210
			7.8/10.4	21.7/25.0	66.2/70.3	70/80	64/68	212/215	70.0/74.1	80/80	69/73	216/219
			12.0/16.0	33.4/38.5	80.8/87.2	90/90	78/84	223/229	84.6/91.0	90/100	82/88	227/233
			15.8/21.0	43.8/50.5	93.8/102.2	100/110	90/98	278/291	97.6/106.0	100/110	94/102	282/295
			19.9/26.5	55.2/63.8	108.1/118.8	110/125	103/113	300/318	111.9/122.6	125/125	107/117	304/322
		HIGH	–	–	46.6	60	48	216	50.4	60	52	220
			4.9/6.5	13.6/15.6	63.6/66.1	70/80	64/66	230/232	67.4/69.9	80/80	68/70	234/236
			7.8/10.4	21.7/25.0	73.7/77.8	80/80	73/77	238/241	77.5/81.6	80/90	77/81	242/245
			12.0/16.0	33.4/38.5	88.3/94.7	90/100	86/92	249/255	92.1/98.5	100/100	91/97	253/259
			15.8/21.0	43.8/50.5	101.3/109.7	110/110	98/106	304/317	105.1/113.5	110/125	103/111	308/321
			19.9/26.5	55.2/63.8	115.6/126.3	125/150	112/121	326/344	119.4/130.1	125/150	116/126	330/348
	460–3–60	STD	–	–	18.5	25	19	77	20.3	30	21	79
			6.0	7.2	27.5	30	27	84	29.3	30	29	86
			11.5	13.8	35.8	40	34	91	37.6	40	36	93
			14.0	16.8	39.5	45	38	94	41.3	45	40	96
			23.0	27.7	53.2	60	50	105	55.0	60	52	107
			25.5	30.7	56.9	60	54	108	58.7	60	56	110
		MED	–	–	19.3	25	19	96	21.1	30	22	98
			6.0	7.2	28.3	30	28	103	30.1	35	30	105
			11.5	13.8	36.6	40	35	110	38.4	40	37	112
			14.0	16.8	40.3	45	39	113	42.1	45	41	115
			23.0	27.7	54.0	60	51	124	55.8	60	53	126
			25.5	30.7	57.7	60	55	127	59.5	60	57	129
		HIGH	–	–	23.3	30	24	109	25.1	30	26	111
			6.0	7.2	32.3	40	32	116	34.1	40	34	118
			11.5	13.8	40.6	45	40	123	42.4	45	42	125
			14.0	16.8	44.3	45	43	126	46.1	50	45	128
			23.0	27.7	58.0	60	56	137	59.8	60	58	139
			25.5	30.7	61.7	70	59	140	63.5	70	61	142
	575–3–60	STD	–	–	14.6	20	15	63	18.4	25	19	67
		MED	–	–	15.0	20	15	78	18.8	25	19	82
		HIGH	–	–	17.8	25	18	92	21.6	25	23	96

ADVANCED PRODUCT DATA

Table 46 – (cont.) MCA/MOCP DETERMINATION WITH PWRD C.O.

UNIT	NOM. V–PH–HZ	IFM TYPE	ELEC HTR		WITH PWRD C.O.							
					NO P.E.				WITH P.E. (pwrd fr/unit)			
			Nom (kW)	FLA	MCA	MOCP	DISC. SIZE FLA	DISC. SIZE LRA	MCA	MOCP	DISC. SIZE FLA	DISC. SIZE LRA
50HCQD08	208/230–3–60	STD	–	–	42.5	50	45	196	46.3	50	49	200
			7.8/10.4	21.7/25.0	69.6/73.7	70/80	70/74	218/221	73.4/77.5	80/80	74/78	222/225
			12.0/16.0	33.4/38.5	84.2/90.6	90/100	83/89	229/235	88.0/94.4	90/100	88/94	233/239
			18.6/24.8	51.7/59.7	107.1/117.1	110/125	105/114	248/256	110.9/120.9	125/125	109/118	252/260
			24.0/32.0	66.7/77.0	125.9/138.7	150/150	122/134	263/273	129.7/142.5	150/150	126/138	267/277
			31.8/42.4	88.4/102.0	153.0/170.0	175/175	147/162	373/400	156.8/173.8	175/175	151/167	377/404
		MED	–	–	42.5	50	45	207	46.3	50	49	211
			7.8/10.4	21.7/25.0	69.6/73.7	70/80	70/74	229/232	73.4/77.5	80/80	74/78	233/236
			12.0/16.0	33.4/38.5	84.2/90.6	90/100	83/89	240/246	88.0/94.4	90/100	88/94	244/250
			18.6/24.8	51.7/59.7	107.1/117.1	110/125	105/114	259/267	110.9/120.9	125/125	109/118	263/271
			24.0/32.0	66.7/77.0	125.9/138.7	150/150	122/134	274/284	129.7/142.5	150/150	126/138	278/288
			31.8/42.4	88.4/102.0	153.0/170.0	175/175	147/162	384/411	156.8/173.8	175/175	151/167	388/415
		HIGH	–	–	47.3	60	51	250	51.1	60	55	254
			7.8/10.4	21.7/25.0	74.4/78.5	80/80	76/79	272/275	78.2/82.3	80/90	80/84	276/279
			12.0/16.0	33.4/38.5	89.0/95.4	90/100	89/95	283/289	92.8/99.2	100/100	93/99	287/293
			18.6/24.8	51.7/59.7	111.9/121.9	125/125	110/119	302/310	115.7/125.7	125/150	114/124	306/314
			24.0/32.0	66.7/77.0	130.7/143.5	150/150	127/139	317/327	134.5/147.3	150/150	132/144	321/331
			31.8/42.4	88.4/102.0	157.8/174.8	175/175	152/168	427/454	161.6/178.6	175/200	157/172	431/458
	460–3–60	STD	–	–	20.1	25	21	97	21.9	25	23	99
			13.9	16.7	41.0	45	41	114	42.8	45	43	116
			16.5	19.8	44.9	45	44	117	46.7	50	46	119
			27.8	33.4	61.9	70	60	130	63.7	70	62	132
			33.0	39.7	69.8	70	67	137	71.6	80	69	139
			41.7	50.2	82.9	90	79	197	84.7	90	81	199
		MED	–	–	20.1	25	21	103	21.9	25	23	105
			13.9	16.7	41.0	45	41	120	42.8	45	43	122
			16.5	19.8	44.9	45	44	123	46.7	50	46	125
			27.8	33.4	61.9	70	60	136	63.7	70	62	138
			33.0	39.7	69.8	70	67	143	71.6	80	69	145
			41.7	50.2	82.9	90	79	203	84.7	90	81	205
		HIGH	–	–	21.9	25	23	125	23.7	30	26	127
			13.9	16.7	42.8	45	43	142	44.6	45	45	144
			16.5	19.8	46.7	50	46	145	48.5	50	48	147
			27.8	33.4	63.7	70	62	158	65.5	70	64	160
			33.0	39.7	71.6	80	69	165	73.4	80	71	167
			41.7	50.2	84.7	90	81	225	86.5	90	83	227
	575–3–60	STD	–	–	15.2	20	16	79	19.0	25	21	83
			17.0	20.4	40.7	45	40	99	44.5	45	44	103
			34.0	40.9	66.3	70	63	120	70.1	80	68	124
		MED	–	–	14.8	20	16	83	18.6	20	20	87
			17.0	20.4	40.3	45	39	103	44.1	45	44	107
			34.0	40.9	65.9	70	63	124	69.7	70	67	128
		HIGH	–	–	15.6	20	17	94	19.4	25	21	98
			17.0	20.4	41.1	45	40	114	44.9	45	45	118
			34.0	40.9	66.7	70	64	135	70.5	80	68	139

ADVANCED PRODUCT DATA

Table 46 – (cont.) MCA/MOCP DETERMINATION WITH PWRD C.O.

UNIT	NOM. V–PH–HZ	IFM TYPE	ELEC HTR		WITH PWRD C.O.							
					NO P.E.				WITH P.E. (pwrd fr/unit)			
			Nom (kW)	FLA	MCA	MOCP	DISC. SIZE FLA	DISC. SIZE LRA	MCA	MOCP	DISC. SIZE FLA	DISC. SIZE LRA
50HCQD09	208/230–3–60	STD	–	–	49.9	60	53	230	53.7	60	57	234
			7.8/10.4	21.7/25.0	77.0/81.2	80/90	78/82	252/255	80.8/85.0	90/90	82/86	256/259
			12.0/16.0	33.4/38.5	91.7/98.0	100/100	91/97	263/269	95.5/101.8	100/110	96/101	267/273
			18.6/24.8	51.7/59.7	114.5/124.5	125/125	112/121	282/290	118.3/128.3	125/150	117/126	286/294
			24.0/32.0	66.7/77.0	133.3/146.2	150/150	129/141	297/307	137.1/150.0	150/150	134/146	301/311
			31.8/42.4	88.4/102.0	160.4/177.4	175/200	154/170	407/434	164.2/181.2	175/200	159/174	411/438
		MED	–	–	52.2	60	55	267	56.0	70	60	271
			7.8/10.4	21.7/25.0	79.3/83.5	80/90	80/84	289/292	83.1/87.3	90/90	85/89	293/296
			12.0/16.0	33.4/38.5	94.0/100.3	100/110	94/100	300/306	97.8/104.1	100/110	98/104	304/310
			18.6/24.8	51.7/59.7	116.8/126.8	125/150	115/124	319/327	120.6/130.6	125/150	119/128	323/331
			24.0/32.0	66.7/77.0	135.6/148.5	150/150	132/144	334/344	139.4/152.3	150/175	137/148	338/348
			31.8/42.4	88.4/102.0	162.7/179.7	175/200	157/173	444/471	166.5/183.5	175/200	161/177	448/475
		HIGH	–	–	54.7	60	58	284	58.5	70	63	288
			7.8/10.4	21.7/25.0	81.8/86.0	90/90	83/87	306/309	85.6/89.8	90/90	88/91	310/313
			12.0/16.0	33.4/38.5	96.5/102.8	100/110	97/103	317/323	100.3/106.6	110/110	101/107	321/327
			18.6/24.8	51.7/59.7	119.3/129.3	125/150	118/127	336/344	123.1/133.1	125/150	122/131	340/348
			24.0/32.0	66.7/77.0	138.1/151.0	150/175	135/147	351/361	141.9/154.8	150/175	139/151	355/365
			31.8/42.4	88.4/102.0	165.2/182.2	175/200	160/176	461/488	169.0/186.0	175/200	164/180	465/492
	460–3–60	STD	–	–	22.9	25	24	114	24.7	30	26	116
			13.9	16.7	43.7	45	43	131	45.5	50	46	133
			16.5	19.8	47.6	50	47	134	49.4	50	49	136
			27.8	33.4	64.6	70	63	147	66.4	70	65	149
			33.0	39.7	72.5	80	70	154	74.3	80	72	156
			41.7	50.2	85.6	90	82	214	87.4	90	84	216
		MED	–	–	23.7	30	25	133	25.5	30	27	135
			13.9	16.7	44.5	45	44	150	46.3	50	46	152
			16.5	19.8	48.4	50	48	153	50.2	60	50	155
			27.8	33.4	65.4	70	64	166	67.2	70	66	168
			33.0	39.7	73.3	80	71	173	75.1	80	73	175
			41.7	50.2	86.4	90	83	233	88.2	90	85	235
		HIGH	–	–	24.7	30	26	142	26.5	30	28	144
			13.9	16.7	45.5	50	46	159	47.3	50	48	161
			16.5	19.8	49.4	50	49	162	51.2	60	51	164
			27.8	33.4	66.4	70	65	175	68.2	70	67	177
			33.0	39.7	74.3	80	72	182	76.1	80	74	184
			41.7	50.2	87.4	90	84	242	89.2	90	86	244
	575–3–60	STD	–	–	18.0	20	19	99	21.8	25	23	103
			17.0	20.4	43.5	45	43	119	47.3	50	47	123
			34.0	40.9	69.1	70	66	140	72.9	80	70	144
		MED	–	–	18.8	25	20	110	22.6	25	24	114
			17.0	20.4	44.3	45	43	130	48.1	50	48	134
			34.0	40.9	69.9	70	67	151	73.7	80	71	155
		HIGH	–	–	18.8	25	20	110	22.6	25	24	114
			17.0	20.4	44.3	45	43	130	48.1	50	48	134
			34.0	40.9	69.9	70	67	151	73.7	80	71	155

ADVANCED PRODUCT DATA

TYPICAL WIRING DIAGRAMS

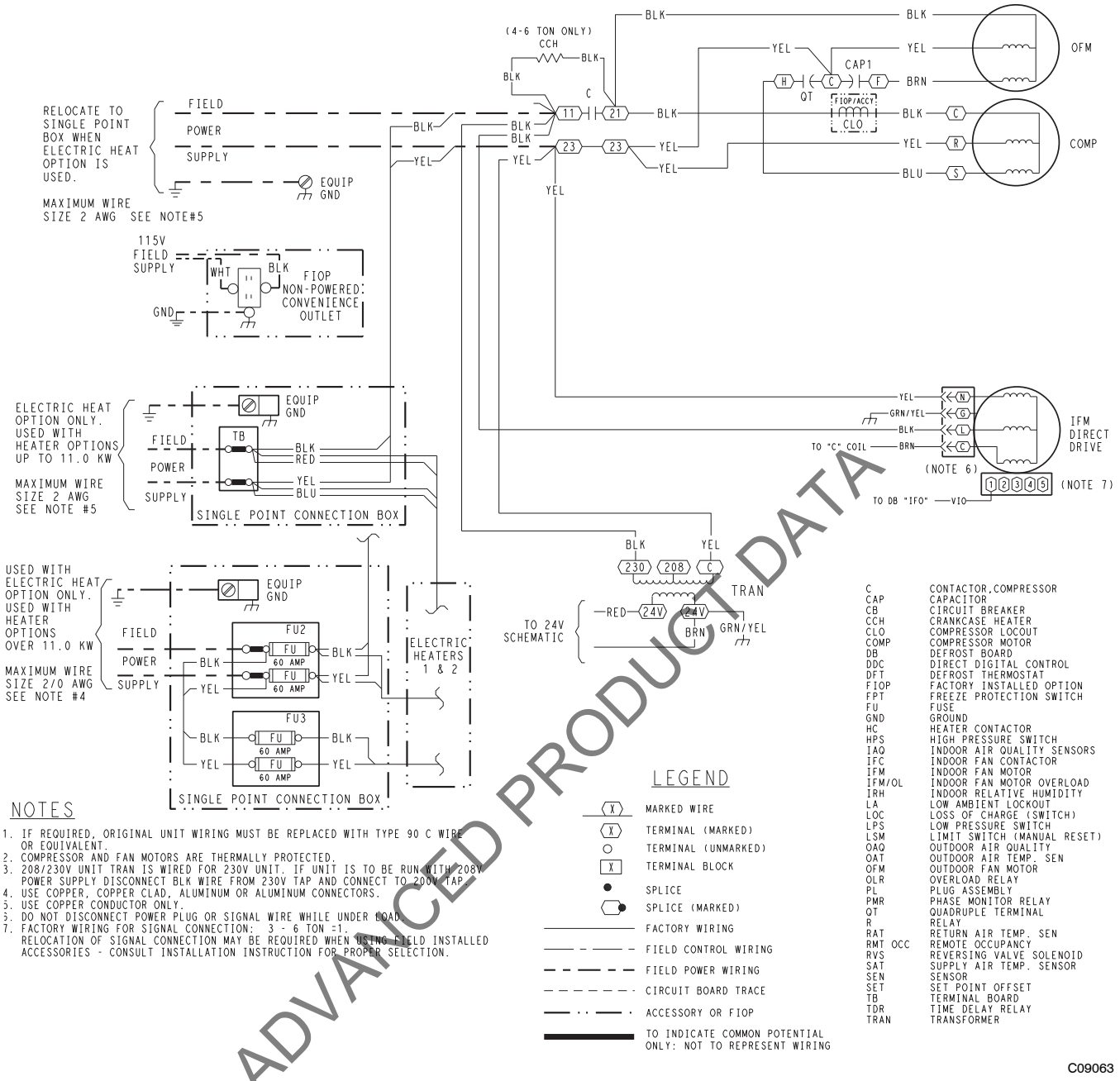

ADVANCED PRODUCT DATA

Fig. 20 – 1-Stage Cooling Typical Power Diagram

TYPICAL WIRING DIAGRAMS (cont.)

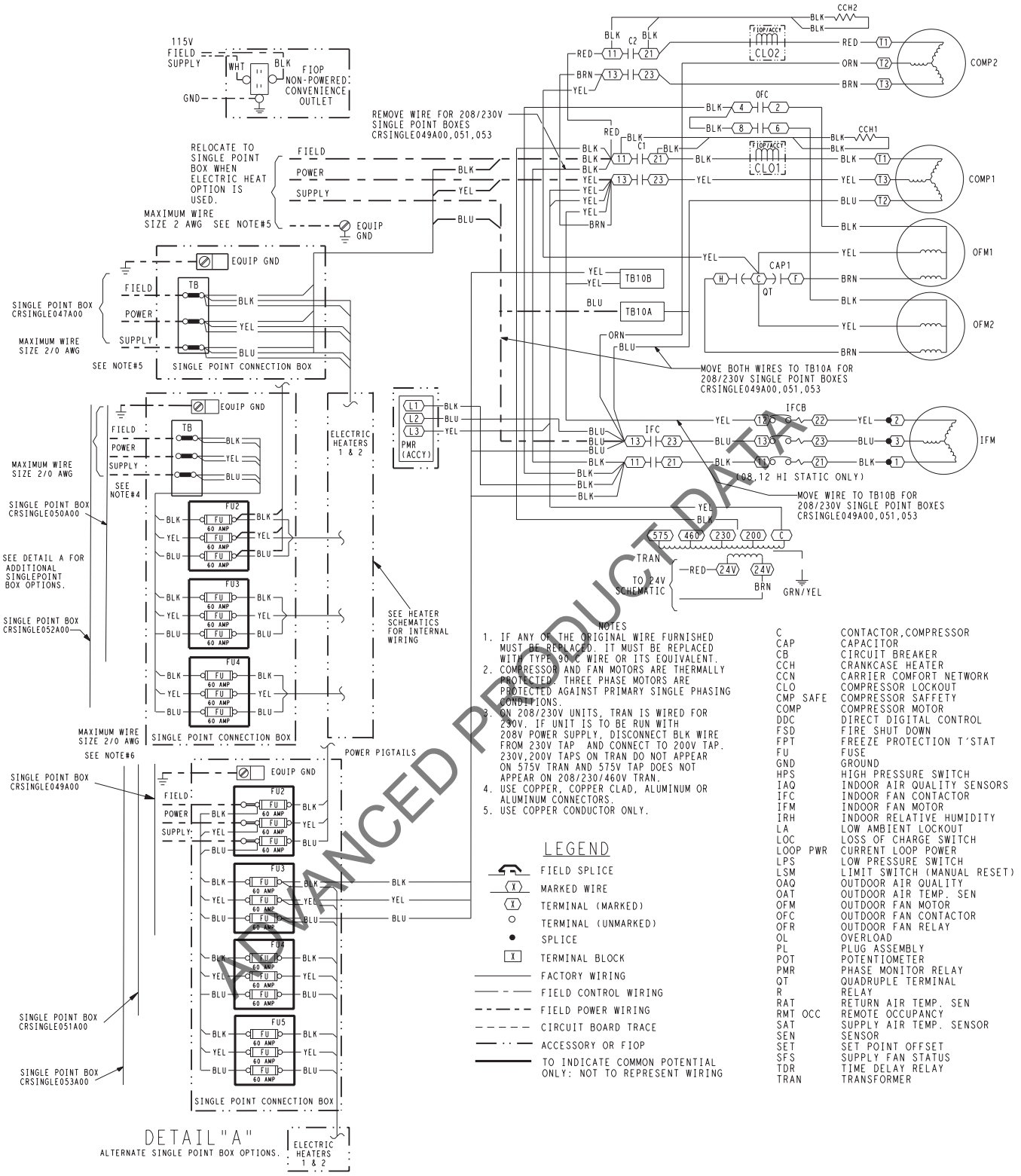

ADVANCED PRODUCT DATA

Fig. 21 – 2-Stage Cooling Typical Power Diagram

TYPICAL WIRING DIAGRAMS (cont.)

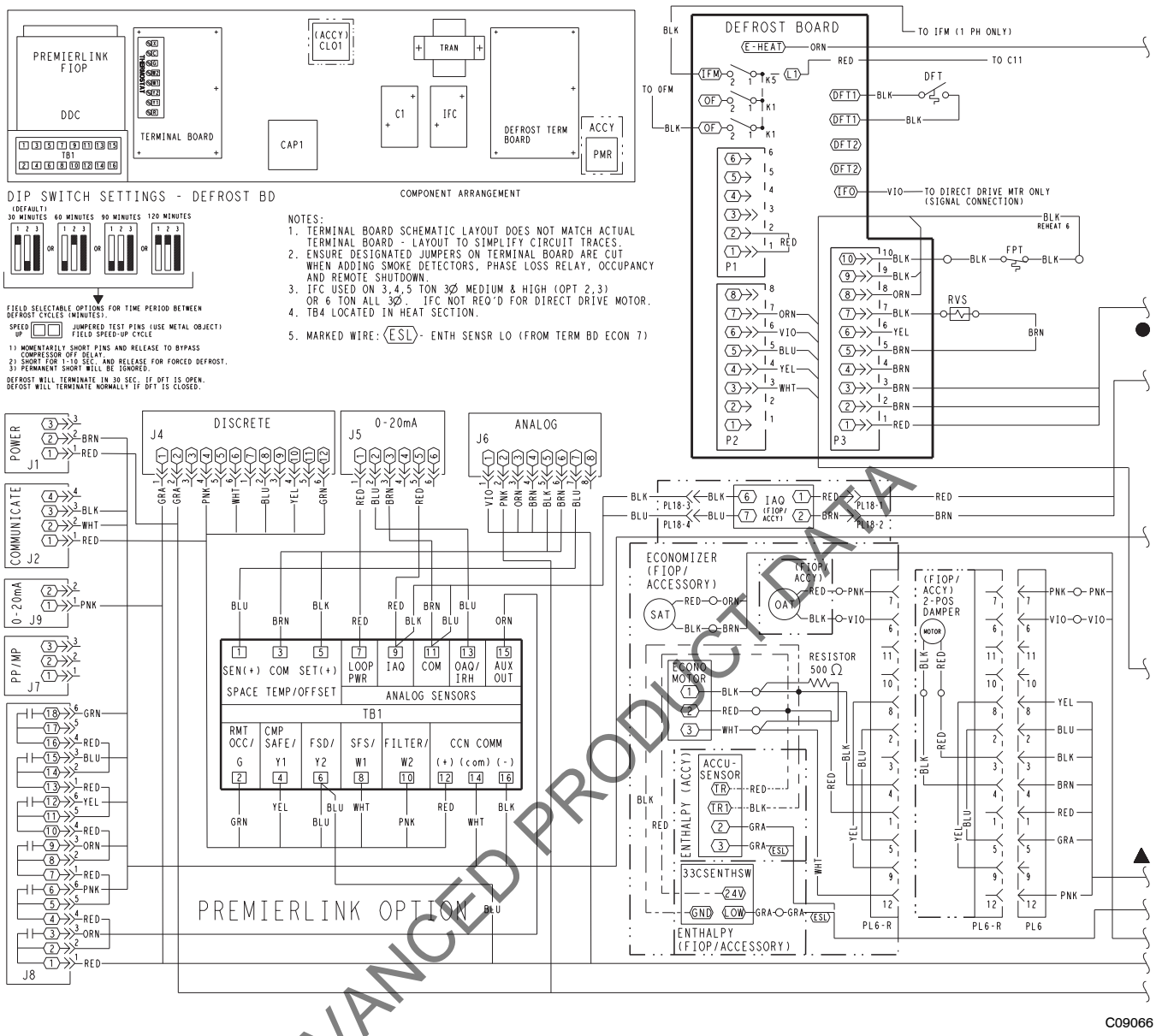

Fig. 22 – PremierLink Option Diagram

ADVANCED PRODUCT DATA

TYPICAL WIRING DIAGRAMS (cont.)

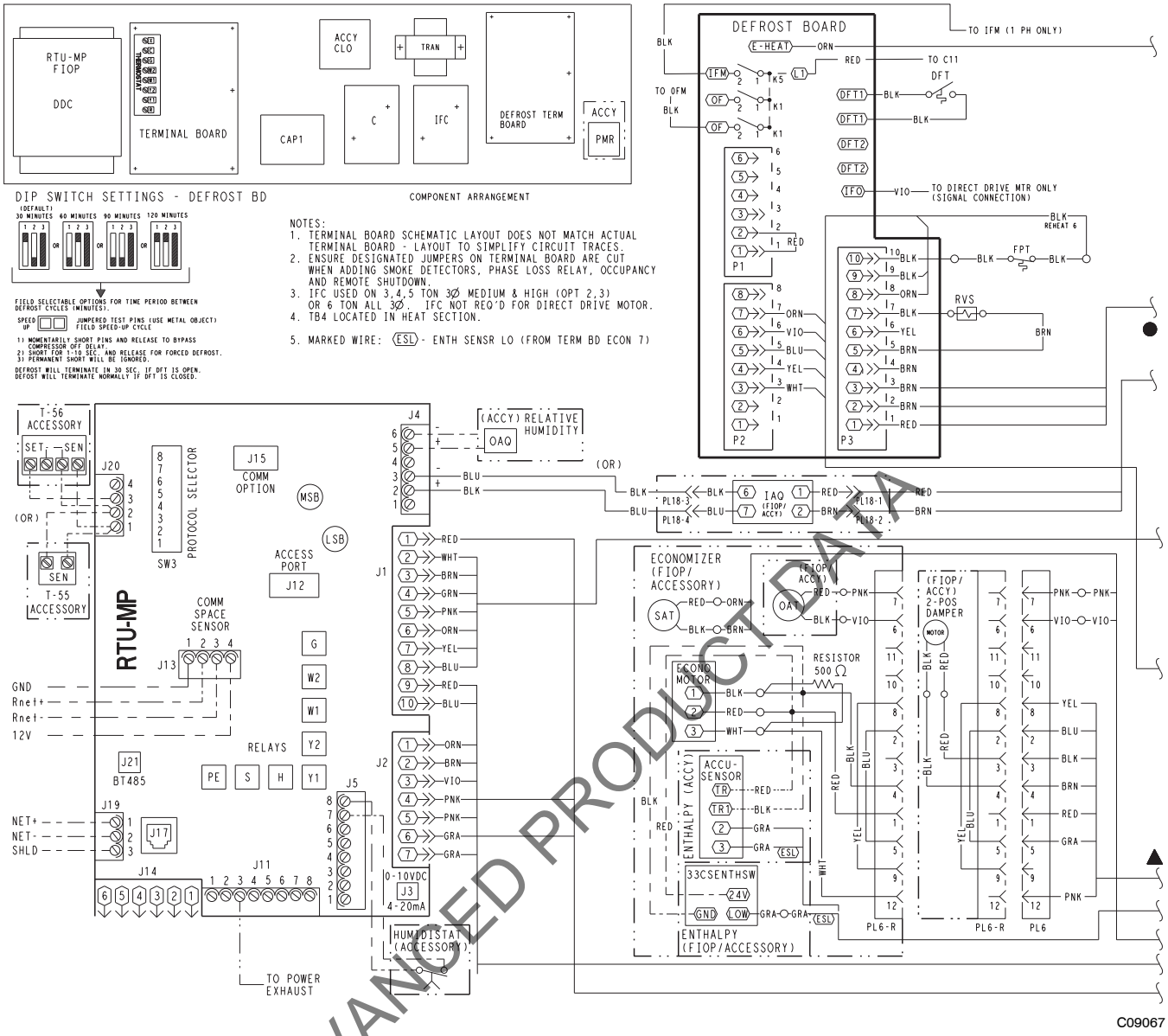

Fig. 23 - Multi-Protocol Option Diagram

ADVANCED PRODUCT DATA

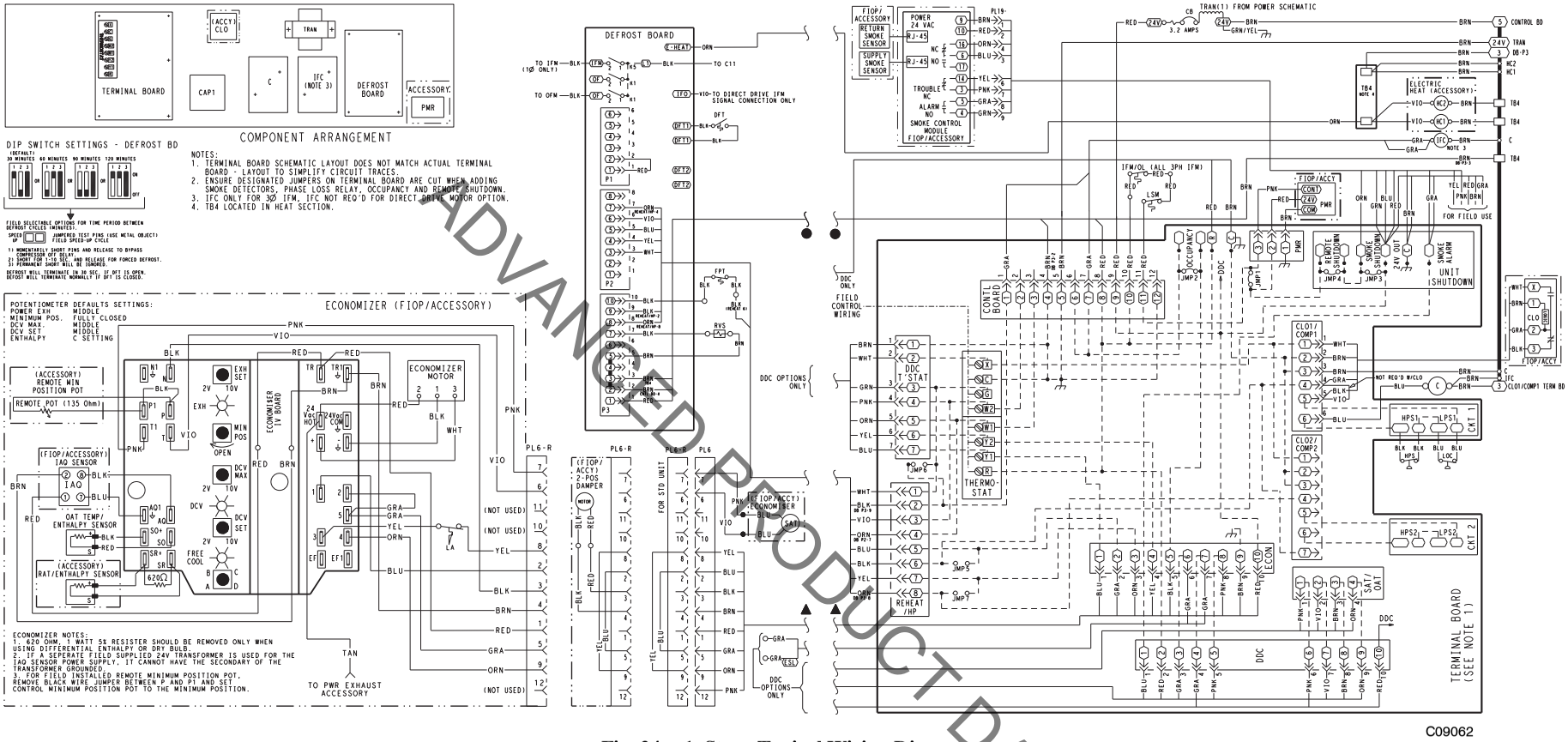

Fig. 24 - 1-Stage Typical Wiring Diagram

ADVANCED PRODUCT DATA

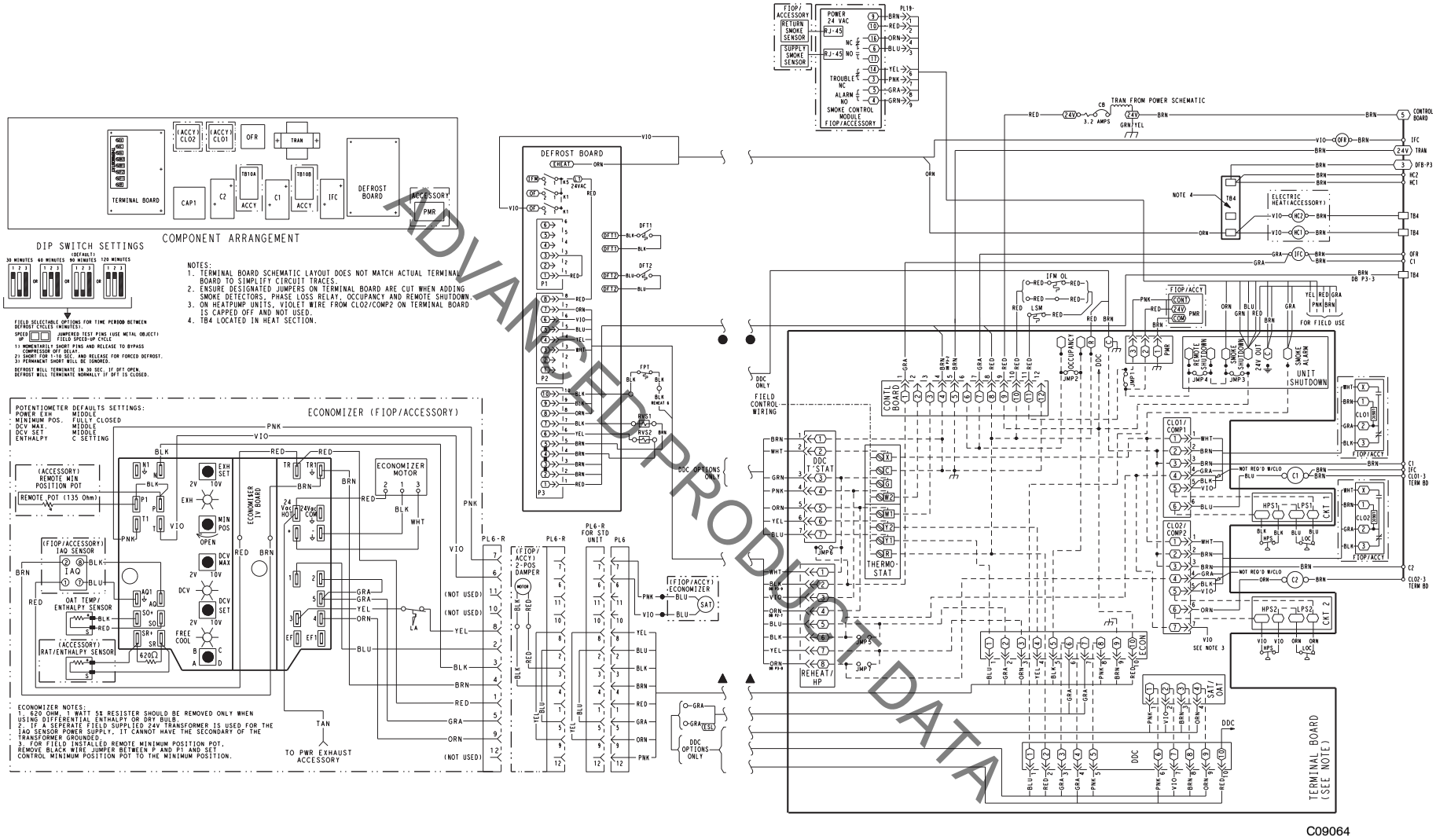

ADVANCED PRODUCT DATA

Fig. 25 - 2-Stage Typical Wiring Diagram

Cooling, unit without economizer

When thermostat calls for cooling, terminals G and Y1 are energized. The indoor fan contactor (IFC), reversing valve solenoid (RVS) and compressor contactor are energized and indoor fan motor, compressor, and outdoor fan starts. The outdoor fan motor runs continuously while unit is cooling.

Two-stage models: If Stage 1 cooling does not satisfy the space load, the space temperature will rise until thermostat calls for Stage 2 cooling (Y2 closes). Defrost Board activates Stage 2 Compressor. Reversing valve 2 switches to Cooling position. Compressor 2 contactor is energized; Compressor 2 starts and Circuit 2 operates in Cooling mode.

When Cooling Stage 2 is satisfied, thermostat Y2 opens. Compressor 2 contactor is de-energized; Compressor 2 stops. Reversing Valve 2 remains energized.

When Cooling Stage 1 is satisfied, thermostat Y1 opens. Compressor 1 contactor is de-energized; Compressor 1 stops. Outdoor fan relay is de-energized; outdoor fans stop. After the Fan Delay period, the Indoor fan contactor is de-energized; indoor fan stops (unless Continuous Fan operation has been selected). Reversing Valve 1 remains energized.

Reversing valve solenoids are energized in Cooling modes. Each solenoid will remain energized until the next Heating mode is initiated for this circuit.

Heating, unit without economizer

Upon a request for heating from the space thermostat, terminal W1 will be energized with 24V. The IFC, outdoor fan contactor (OFC), C1, and C2 will be energized. The indoor fan, outdoor fans, and compressor no. 1, and compressor no. 2 are energized and reversing valves are de-energized and switch position.

If the space temperature continues to fall while W1 is energized, W2 will be energized with 24V, and the heater contactor(s) (HC) will be energized, which will energize the electric heater(s).

When the space thermostat is satisfied, W2 will be de-energized first, and the electric heater(s) will be de-energized.

Upon a further rise in space temperature, W1 will be de-energized.

Two compressor models: When the thermostat calls for heating, terminal W1 is energized. Defrost Board de-energizes both reversing valve solenoids and reversing valves move to Heating position. The indoor fan contactor is energized; indoor fan motor starts. Outdoor fan relay is energized; both outdoor fan motors run. Compressor contactors C1 and C2 are energized; both refrigeration circuits operate in Heating mode.

If Stage 1 heating does not satisfy the space load, the space temperature will fall until thermostat calls for Stage 2 heating (W2 closes). Terminal W2 is energized. Defrost Board issues an output at EHEAT. Heater contactor 1 and heater contactor 2 (if installed) are energized; all electric heaters are energized.

When space heating load is partially satisfied, thermostat terminal W2 is de-energized; heater contactors are de-energized and all electric heat is terminated. Stage 1 heating continues.

When the space heating load is fully satisfied, thermostat terminal W1 is also de-energized.

Reversing valve solenoids remain de-energized until the next call for Cooling mode is initiated.

Cooling, unit with EconoMi$er IV

When free cooling is not available, the compressors will be controlled by the zone thermostat. When free cooling is available, the outdoor air damper is modulated by the EconoMi$er IV control to provide a 50 to 55°F (10° to 13°C) mixed air temperature into the zone. As the mixed air temperature fluctuates above 55 or below 50°F (13° to 10°C), the dampers will be modulated (open or close) to bring the mixed air temperature back within control.

If mechanical cooling is utilized with free cooling, the outdoor air damper will maintain its current position at the time the compressor is started. If the increase in cooling capacity causes the mixed air temperature to drop below 45°F (7°C), then the outdoor air damper position will be decreased to the minimum position. If the mixed air temperature continues to fall, the outdoor air damper will close. Control returns to normal once the mixed air temperature rises above 48°F (9°C).

If optional power exhaust is installed, as the outdoor air damper opens and closes, the power exhaust fans will be energized and de-energized.

If field-installed accessory CO_2 sensors are connected to the EconoMi$er IV control, a demand controlled ventilation strategy will begin to operate. As the CO_2 level in the zone increases above the CO_2 setpoint, the minimum position of the damper will be increased proportionally. As the CO_2 level decreases because of the increase in fresh air, the outdoor air damper will be proportionally closed.

For EconoMi$er IV operation, there must be a thermostat call for the fan (G). If the unit is occupied and the fan is on, the damper will operate at minimum position. Otherwise, the damper will be closed.

When the EconoMi$er IV control is in the occupied mode and a call for cooling exists (Y1 on the thermostat), the control will first check for indoor fan operation. If the fan is not on, then cooling will not be activated. If the fan is on, then the control will open the EconoMi$er IV damper to the minimum position.

On the initial power to the EconoMi$er IV control, it will take the damper up to $2^1/_2$ minutes before it begins to position itself. Any change in damper position will take

ADVANCED PRODUCT DATA

up to 30 seconds to initiate. Damper movement from full closed to full open (or vice versa) will take between $1^1/_2$ and $2^1/_2$ minutes.

If free cooling can be used as determined from the appropriate changeover command (switch, dry bulb, enthalpy curve, differential dry bulb, or differential enthalpy), then the control will modulate the dampers open to maintain the mixed air temperature setpoint at 50° to 55°F (10° to 13°C).

If there is a further demand for cooling (cooling second stage — Y2 is energized), then the control will bring on compressor stage 1 to maintain the mixed air temperature setpoint. The EconoMi$er IV damper will be open at maximum position. EconoMi$er IV operation is limited to a single compressor.

Heating, unit with EconoMi$er

When the room temperature calls for heat through terminal W1, the indoor (evaporator) fan contactor (IFC) and heater contactor no. 1 (HC1) are energized and the reversing valve(s) de-energize and switches position. On units equipped for 2 stages of heat, when additional heat is needed, heater contactor no. 2 is energized through W2. The economizer damper moves to the minimum position. When the thermostat is satisfied, the damper moves to the fully closed position.

Cooling, unit with EconoMi$er2, PremierLink control and a thermostat

When free cooling is not available, the compressors will be controlled by the PremierLink control in response to the Y1 and Y2 inputs from the thermostat.

The PremierLink control will use the following information to determine if free cooling is available:

- Indoor fan has been on for at least 30 seconds.
- The SPT, SAT, and OAT inputs must have valid readings.
- OAT must be less than 75°F (24°C).
- OAT must be less than SPT.
- Enthalpy must be LOW (may be jumpered if an enthalpy sensor not available).
- Economizer position is NOT forced.

Pre-cooling occurs when there is no call from the thermostat except G. Pre-cooling is defined as the economizer modulates to provide 70°F (21°C) supply air.

When free cooling is available the PremierLink control will control the compressors, energize the reversing valve(s) and economizer to provide a supply air temperature determined to meet the Y1 and Y2 calls from the thermostat.

If optional power exhaust is installed, as the outdoor air damper opens and closes, the power exhaust fans will be energized and de-energized.

If field-installed accessory CO_2 sensors are connected to the PremierLink control, a PID controlled demand ventilation strategy will begin to operate. As the CO_2 level in the zone increases above the CO_2 setpoint, the minimum position of the damper will be increased proportionally. As the CO_2 level decreases because of the increase in fresh air, the outdoor air damper will be proportionally closed.

Heating, unit with EconoMi$er2, PremierLink control and a thermostat

When the thermostat calls for heating, terminal W1 is energized. The PremierLink control will move the economizer damper to the minimum position if there is a call for G and closed if there is a call for W1 without G. In order to prevent thermostat from short cycling, the unit is locked into the heating mode for at least 10 minutes when W1 is energized. The reversing valve solenoid(s) de-energizes and switches position.

On units equipped for two stages of heat, when additional heat is needed, W2 is energized and the electric heat (if used) comes on. When the thermostat is satisfied and W1 is de-energized, the IFM stops.

Cooling, unit with EconoMi$er2, PremierLink control and a room sensor

When free cooling is not available, the compressors will be controlled by the PremierLink controller using a PID Error reduction calculation.

The PremierLink controller will use the following information to determine if free cooling is available:

- Indoor fan has been on for at least 30 seconds.
- The SPT, SAT, and OAT inputs must have valid readings.
- OAT must be less than 75°F (24°C).
- OAT must be less than SPT.
- Enthalpy must be LOW (may be jumpered if an enthalpy sensor is not available).
- Economizer position is NOT forced.

When free cooling is available, the outdoor air damper is positioned through the use of a Proportional Integral (PID) control process to provide a calculated supply air temperature into the zone. The supply air will maintain the space temperature between the heating and cooling setpoints.

The PremierLink control will integrate the compressors stages with the economizer based on similar logic as the three routines listed in the previous section. The SASP will float up and down based on the error reduction calculations that compare space temperature and space setpoint. The reversing valves will be energized.

If an optional power exhaust is installed, as the outdoor air damper opens and closes, the power exhaust fans will be energized and de-energized.

ADVANCED PRODUCT DATA

If field- installed accessory CO_2 sensors are connected to the PremierLink control, a PID-controlled demand ventilation strategy will begin to operate. As the CO_2 level in the zone increases above the CO_2 setpoint, the minimum position of the damper will be increased proportionally. As the CO_2 level decreases because of the increase in fresh air, the outdoor air damper will be proportionally closed.

Heating, unit with EconoMi$er2, PremierLink control and a room sensor

Every 40 seconds the controller will calculate the required heat stages (maximum of 3) to maintain Supply Air Temperature (SAT) if the following qualifying conditions are met:

- Indoor fan has been on for at least 30 seconds.
- COOL mode is not active.
- OCCUPIED, TEMP.COMPENSATED START or HEAT mode is active.
- SAT reading is available.
- Fire shutdown mode is not active.

If all of the above conditions are met, the number of heat stages is calculated; otherwise the required number of heat stages will be set to 0.

If the PremierLink controller determines that heat stages are required, the economizer damper will be moved to minimum position if occupied and closed if unoccupied.

Defrost

When the temperature of the outdoor coil drops below 28°F (-2°C) as sensed by the defrost thermostat (DFT2) and the defrost timer is at the end of a timed period (adjustable at 30, 60, 90 or 120 minutes), reversing valve solenoids (RVS1 and RVS2) are energized and the OFC is de-energized. This switches the position of the reversing valves and shuts off the outdoor fan. The electric heaters (if installed) will be energized.

The unit continues to defrost until the coil temperature as measured by DFT2 reaches 65°F (18°C), or the duration of defrost cycle completes a 10-minute period.

During the Defrost mode, if circuit 1 defrosts first, RVS1 will oscillate between Heating and Cooling modes until the Defrost mode is complete.

At the end of the defrost cycle, the electric heaters (if installed) will be de-energized; the reversing valves switch and the outdoor fan motor will be energized. The unit will now operate in the Heating mode.

If the space thermostat is satisfied during a defrost cycle, the unit will continue in the Defrost mode until the time or temperature constraints are satisfied.

Automatic changeover

When the system selection switch is set at AUTO. position, unit automatically changes from heating operation to cooling operation when the temperature of the conditioned space rises to the cooling level setting. When the temperature of the conditioned space falls to the heating level setting, unit automatically changes from cooling to heating operation (with a 3°F deadband in between).

Continuous air circulation

Turn unit power on. Set system control at OFF position. Set fan switch at ON position. The indoor fan contactor is energized through the thermostat switch and the indoor fan runs continuously.

Emergency heat

When the switch is on (thermostat is set to the EM HT position), compressor circuit and outdoor thermostats are bypassed, and the second stage of thermostat energizes the indoor blower and the electric resistance heaters.

ADVANCED PRODUCT DATA

GUIDE SPECIFICATIONS - 50HCQ*04-09

Note about this specification:

Carrier created this specification in "Masterformat" as published by the Construction Specification Institute. Please feel free to copy this specification directly into your building specifications.

Rooftop Packaged Heat Pump

HVAC Guide Specifications

Size Range: **3 to 8.5 Nominal Tons**

Section **Description**

23 06 80 Schedules for Decentralized HVAC Equipment

23 06 80.13 Decentralized Unitary HVAC Equipment Schedule

23 06 80.13.A. Rooftop unit schedule

1. Schedule is per the project specification requirements.

23 07 16 HVAC Equipment Insulation

23 07 16.13 Decentralized, Rooftop Units:

23 07 16.13.A. Evaporator fan compartment:

1. Interior cabinet surfaces shall be insulated with a minimum 1/2-in. thick, minimum 1 1/2 lb density, flexible fiberglass insulation bonded with a phenolic binder, neoprene coated on the air side.
2. Insulation and adhesive shall meet NFPA 90A requirements for flame spread and smoke generation.

23 07 16.13.B. Electric heat compartment:

1. Aluminum foil-faced fiberglass insulation shall be used.
2. Insulation and adhesive shall meet NFPA 90A requirements for flame spread and smoke generation.

23 09 13 Instrumentation and Control Devices for HVAC

23 09 13.23 Sensors and Transmitters

23 09 13.23.A. Thermostats

1. Thermostat must
   a. have capability to energize 2 different stages of cooling, and 2 different stages of heating.
   b. include capability for occupancy scheduling.

23 09 23 Direct-digital Control system for HVAC

23 09 23.13 Decentralized, Rooftop Units:

23 09 23.13.A. PremierLink™ controller

1. Shall be ASHRAE 62-2001 compliant.
2. Shall accept 18-32VAC input power.
3. Shall have an operating temperature range from -40°F (-40°C) to 158°F (70°C), 10% - 95% RH (non-condensing).
4. Shall include an integrated economizer controller to support an economizer with 4 to 20 mA actuator input and no microprocessor controller.
5. Controller shall accept the following inputs: space temperature, setpoint adjustment, outdoor air temperature, indoor air quality, outdoor air quality, indoor relative humidity, compressor lock-out, fire shutdown, enthalpy, fan status, remote time clock/door switch.
6. Shall accept a CO_2 sensor in the conditioned space, and be Demand Control Ventilation (DCV) ready.
7. Shall provide the following outputs: Economizer, fan, cooling stage 1, cooling stage 2, heat stage 1, heat stage 2, heat stage 3/ exhaust/ reversing valve/ dehumidify/ occupied.
8. Unit shall provide surge protection for the controller through a circuit breaker.
9. Shall be Internet capable, and communicate at a Baud rate of 38.4K or faster
10. Shall have an LED display independently showing the status of activity on the communication bus, and processor operation.
11. Shall include an EIA-485 protocol communication port, an access port for connection of either a computer or a Carrier technician tool, an EIA-485 port for network communication to intelligent space sensors and displays, and a port to connect an optional LonWorks plug-in communications card.

ADVANCED PRODUCT DATA

12. Shall have built-in Carrier Comfort Network (CCN) protocol, and be compatible with other CCN devices, including ComfortLink and ComfortVIEW controllers.
13. Shall have built-in support for Carrier technician tool.
14. Software upgrades will be accomplished by local download. Software upgrades through chip replacements are not allowed.
15. Shall be shock resistant in all planes to 5G peak, 11ms during operation, and 100G peak, 11ms during storage.
16. Shall be vibration resistant in all planes to 1.5G @ 20-300 Hz.
17. Shall support a bus length of 4000 ft max, 60 devices per 1000 ft section, and 1 RS-485 repeater per 1000ft sections.

23 09 23.13.B. Multi-protocol, direct digital controller:

1. Shall be ASHRAE 62-2001 compliant.
2. Shall accept 18-30VAC, 50-60Hz, and consumer 15VA or less power.
3. Shall have an operating temperature range from -40°F (-40°C) to 130°F (54°C), 10% - 90% RH (non-condensing).
4. Shall include built-in protocol for BACNET (MS/TP and PTP modes), Modbus (RTU and ASCII), Johnson N2 and LonWorks. LonWorks Echelon processor required for all Lon applications shall be contained in separate communication board.
5. Shall allow access of up to 62 network variables (SNVT). Shall be compatible with all open controllers
6. Baud rate Controller shall be selectable using a dipswitch.
7. Shall have an LED display independently showing the status of serial communication, running, errors, power, all digital outputs, and all analog inputs.
8. Shall accept the following inputs: space temperature, setpoint adjustment, outdoor air temperature, indoor air quality, outdoor air quality, compressor lock-out, fire shutdown, enthalpy switch, and fan status/filter status/humidity/remote occupancy.
9. Shall provide the following outputs: economizer, fan, cooling stage 1, cooling stage 2, heat stage 1, heat stage 2, heat stage 3/ exhaust/ reversing valve.
10. Shall have built-in surge protection circuitry through solid state polyswitches. Polyswitches shall be used on incoming power and network connections. Polyswitches will return to normal when the "trip" condition clears.
11. Shall have a battery back-up capable of a minimum of 10,000 hours of data and time clock retention during power outages.
12. Shall have built-in support for Carrier technician tool.
13. Shall include an EIA-485 protocol communication port, an access port for connection of either a computer or a Carrier technician tool, an EIA-485 port for network communication to intelligent space sensors and displays, and a port to connect an optional LonWorks communications card.
14. Software upgrades will be accomplished by either local or remote download. No software upgrades through chip replacements are allowed.

23 09 33 Electric and Electronic Control System for HVAC

23 09 33.13 Decentralized, Rooftop Units:

23 09 33.13.A. General:

1. Shall be complete with self-contained low voltage control circuit protected by a resettable circuit breaker on the 24-v transformer side. Transformer shall have 75VA capability.
2. Shall utilize color-coded wiring.
3. Shall include a central control terminal board to conveniently and safely provide connection points for vital control functions such as: smoke detectors, phase monitor, economizer, thermostat, DDC control options, loss of charge, freeze switch, high pressure switches.
4. Unit shall include a minimum of one 8-pin screw terminal connection board for connection of control wiring.
5. Shall include integrated defrost system to prevent excessive frost accumulation during heating duty, and shall be controlled as follows:
   a. Defrost shall be initiated on the basis of time and coil temperature.
   b. A 30,60,90,120 minute timer shall activate the defrost cycle only if the coil temperature is low enough to indicate a heavy frost condition.
   c. Defrost cycle shall terminate when defrost thermostat is satisfied and shall have a positive termination time of 10 minutes.
6. Defrost system shall also include:
   a. Defrost Cycle Indicator LED.
   b. Dip switch selectable defrost time between 30,60,90 and 120 minutes. Factory set at 30 minutes.

ADVANCED PRODUCT DATA

c. Molded plug connection to insure proper connection.

23 09 33.23.B. Safeties:

1. Compressor overtemperature, overcurrent.
2. Loss of charge switch.
   a. Units with 2 compressors shall have different sized connectors for the circuit 1 and circuit 2 loss of charge switches. They shall physically prevent the cross-wiring of the safety switches between circuits 1 and 2.
   b. Loss of charge switch shall use different color wire than the high pressure switch. The purpose is to assist the installer and service technician to correctly wire and or troubleshoot the rooftop unit.
3. High pressure switch.
   a. Units with 2 compressors shall have different sized connectors for the circuit 1 and circuit 2 high pressure switches. They shall physically prevent the cross-wiring of the safety switches between circuits 1 and 2.
   b. High pressure switch shall use different color wire than the low pressure switch. The purpose is to assist the installer and service technician to correctly wire and or troubleshoot the rooftop unit.
4. Freeze protection thermostat, evaporator coil.
5. Automatic reset, motor thermal overload protector.

23 09 93 Sequence of Operations for HVAC Controls

23 09 93.13 Decentralized, Rooftop Units:

23 09 93.13 INSERT SEQUENCE OF OPERATION

23 40 13 Panel Air Filters

23 40 13.13 Decentralized, Rooftop Units:

23 40 13.13.A. Standard filter section

1. Shall consist of factory-installed, low velocity, throwaway 2-in. thick fiberglass filters of commercially available sizes.
2. Unit shall use only one filter size. Multiple sizes are not acceptable.
3. Filters shall be accessible through an access panel with "no-tool" removal as described in the unit cabinet section of this specification (23 81 19.13.H).

23 81 19 Self-Contained Air Conditioners

23 81 19.13 Small-Capacity Self-Contained Air Conditioners (50HCQ*04-09)

23 81 19.13.A. General

1. Outdoor, rooftop mounted, electrically controlled, heating and cooling unit utilizing a(n) hermetic scroll compressor(s) for cooling duty and heat pump for heating duty.
2. Factory assembled, single piece heating and cooling rooftop unit. Contained within the unit enclosure shall be all factory wiring, piping, controls, and special features required prior to field startup.
3. Unit shall use environmentally safe, Puron refrigerant.
4. Unit shall be installed in accordance with the manufacturer's instructions.
5. Unit must be selected and installed in compliance with local, state, and federal codes.

23 81 19.13.B. Quality Assurance

1. Unit meets ASHRAE 90.1 minimum efficiency requirements.
2. Unit shall be rated in accordance with AHRI Standards 210/240 and 340/360.
3. Unit shall be designed to conform to ASHRAE 15, 2001.
4. Unit shall be UL-tested and certified in accordance with ANSI Z21.47 Standards and UL-listed and certified under Canadian standards as a total package for safety requirements.
5. Insulation and adhesive shall meet NFPA 90A requirements for flame spread and smoke generation.
6. Unit casing shall be capable of withstanding 500-hour salt spray exposure per ASTM B117 (scribed specimen).
7. Unit casing shall be capable of withstanding Federal Test Method Standard No. 141 (Method 6061) 5000-hour salt spray.
8. Unit shall be designed in accordance with ISO 9001:2000, and shall be manufactured in a facility registered by ISO 9001:2008.
9. Roof curb shall be designed to conform to NRCA Standards.
10. Unit shall be subjected to a completely automated run test on the assembly line. The data for each unit will be stored at the factory, and must be available upon request.
11. Unit shall be designed in accordance with UL Standard 1995, including tested to withstand rain.
12. Unit shall be constructed to prevent intrusion of snow and tested to prevent snow intrusion into the control box up to 40 mph.

ADVANCED PRODUCT DATA

13. Unit shake tested to assurance level 1, ASTM D4169 to ensure shipping reliability.

23 81 19.13.C. Delivery, Storage, and Handling

1. Unit shall be stored and handled per manufacturer's recommendations.
2. Lifted by crane requires either shipping top panel or spreader bars.
3. Unit shall only be stored or positioned in the upright position.

23 81 19.13.D. Project Conditions

1. As specified in the contract.

23 81 19.13.E. Project Conditions

1. As specified in the contract.

23 81 19.13.F. Operating Characteristics

1. Unit shall be capable of starting and running at 125°F (52°C) ambient outdoor temperature, meeting maximum load criteria of AHRI Standard 210/240 or 340/360 at ± 10% voltage.
2. Compressor with standard controls shall be capable of operation down to 30°F (-1°C), ambient outdoor temperatures. Accessory Low Ambient controls are available if mechanically cooling at ambient temperatures below 30°F (-1°C).
3. Unit shall be capable of simultaneous heating duty and defrost cycle operation when using accessory electric heaters.
4. Unit shall discharge supply air vertically or horizontally as shown on contract drawings.
5. Unit shall be factory configured for vertical supply & return configurations.
6. Unit shall be field convertible from vertical to horizontal configuration
7. Unit shall be capable of mixed operation: vertical supply with horizontal return or horizontal supply with vertical return.

23 81 19.13.G. Electrical Requirements

1. Main power supply voltage, phase, and frequency must match those required by the manufacturer.

23 81 19.13.H. Unit Cabinet

1. Unit cabinet shall be constructed of galvanized steel, and shall be bonderized and coated with a prepainted baked enamel finish on all externally exposed surfaces.
2. Unit cabinet exterior paint shall be: film thickness, (dry) 0.003 inches minimum, gloss (per ASTM D523, 60°F): 60, Hardness: H-2H Pencil hardness.
3. Evaporator fan compartment interior cabinet insulation shall conform to AHRI Standards 210/240 or 340/360 minimum exterior sweat criteria. Interior surfaces shall be insulated with a minimum 1/2-in. thick, 1 lb density, flexible fiberglass insulation, neoprene coated on the air side. Aluminum foil-faced fiberglass insulation shall be used in the heat compartment.
4. Base of unit shall have a minimum of three locations for thru-the-base electrical connections (factory-installed or field-installed), standard.
5. Base Rail
   a. Unit shall have base rails on a minimum of 2 sides.
   b. Holes shall be provided in the base rails for rigging shackles to facilitate maneuvering and overhead rigging.
   c. Holes shall be provided in the base rail for moving the rooftop by fork truck.
   d. Base rail shall be a minimum of 16 gauge thickness.
6. Condensate pan and connections:
   a. Shall be a sloped condensate drain pan made of a non-corrosive material.
   b. Shall comply with ASHRAE Standard 62.
   c. Shall use a 3/4-in. -14 NPT drain connection, possible either through the bottom or end of the drain pan. Connection shall be made per manufacturer's recommendations.
7. Top panel:
   a. Shall be a single piece on all models.
8. Electrical Connections
   a. All unit power wiring shall enter unit cabinet at a single, factory prepared, knockout location.
   b. Thru-the-base capability
   (1.) Standard unit shall have a thru-the-base electrical location(s) using a raised, embossed portion of the unit basepan.
   (2.) Optional, factory approved, watertight connection method must be used for thru-the-base electrical connections.
   (3.) No basepan penetration, other than those authorized by the manufacturer, is permitted.

ADVANCED PRODUCT DATA

9. Component access panels (standard)
   a. Cabinet panels shall be easily removable for servicing.
   b. Unit shall have one factory-installed, tool-less, removable, filter access panel.
   c. Panels covering control box, indoor fan, indoor fan motor, gas components (where applicable), and compressors shall have molded composite handles.
   d. Handles shall be UV modified, composite. permanently attached, and recessed into the panel.
   e. Screws on the vertical portion of all removable access panels shall engage into heat resistant, molded composite collars.
   f. Collars shall be removable and easily replaceable using manufacturer recommended parts.

23 81 19.13.I. N/A

23 81 19.13.J. Coils

1. Standard Aluminum/Copper Coils: on all models.
   a. Standard evaporator and condenser coils shall have aluminum lanced plate fins mechanically bonded to seamless internally grooved copper tubes with all joints brazed.
   b. Evaporator coils shall be leak tested to 150 psig. Pressure tested to 450 psig and qualified to UL 1995 burst test at 1775 psig.
   c. Condenser coils shall be leak tested to 150 psig. Pressure tested to 650 psig and qualified to UL 1995 burst test at 1980 psig.
2. Optional Pre-coated aluminum fin condenser coils: on all models.
   a. Shall have a durable epoxy-phenolic coating to provide protection in mildly corrosive coastal environments.
   b. Coating shall be applied to the aluminum fin stock prior to the fin stamping process to create an inert barrier between the aluminum fin and copper tube.
   c. Epoxy-phenolic barrier shall minimize galvanic action between dissimilar metals.
3. Optional Copper-fin evaporator and condenser coils: on all models.
   a. Shall be constructed of copper fins mechanically bonded to copper tubes and copper tube sheets.
   b. Galvanized steel tube sheets shall not be acceptable.
   c. A polymer strip shall prevent coil assembly from contacting the sheet metal coil pan to minimize potential for galvanic corrosion between coil and pan.
4. Optional E-coated aluminum-fin evaporator and condenser coils: on all models.
   a. Shall have a flexible epoxy polymer coating uniformly applied to all coil surface areas without material bridging between fins.
   b. Coating process shall ensure complete coil encapsulation of tubes, fins and headers.
   c. Color shall be high gloss black with gloss per ASTM D523-89.
   d. Uniform dry film thickness from 0.8 to 1.2 mil on all surface areas including fin edges.
   e. Superior hardness characteristics of 2H per ASTM D3363-92A and cross-hatch adhesion of 4B-5B per ASTM D3359-93.
   f. Impact resistance shall be up to 160 in.-lb (ASTM D2794-93).
   g. Humidity and water immersion resistance shall be up to minimum 1000 and 250 hours respectively (ASTM D2247-92 and ASTM D870-92).
   h. Corrosion durability shall be confirmed through testing to be no less than 1000 hours salt spray per ASTM B117-90.

23 81 19.13.K. Refrigerant Components

1. Refrigerant circuit shall include the following control, safety, and maintenance features:
   a. Thermostatic Expansion Valve (TXV) shall help provide optimum performance across the entire operating range. Shall contain removable power element to allow change out of power element and bulb without removing the valve body.
   b. Refrigerant filter drier on each refrigerant circuit.
   c. Service gauge connections on suction and discharge lines.
   d. Pressure gauge access through a specially designed access port in the top panel of the unit.
   e. Suction line accumulator to provide protection in all operating modes from cooling, heating and reverse cycle switching. Standard on each refrigerant circuit.
2. There shall be gauge line access port in the top of the rooftop, covered by a black, removable plug.
   a. The plug shall be easy to remove and replace.
   b. When the plug is removed, the gauge access port shall enable maintenance personnel to route their pressure gauge lines.

ADVANCED PRODUCT DATA

c. This gauge access port shall facilitate correct and accurate condenser pressure readings by enabling the reading with the compressor access panel on.
d. The plug shall be made of a leak proof, UV-resistant, composite material.

3. Compressors
a. Unit shall use one fully hermetic, scroll compressor for each independent refrigeration circuit.
b. Models shall be available with single compressor designs on 04-07 models, plus additional 2 compressor (stage) models from 08-09 sizes.
c. Compressor motors shall be cooled by refrigerant gas passing through motor windings.
d. Compressors shall be internally protected from high discharge temperature conditions.
e. Compressors shall be protected from an overtemperature and over-amperage conditions by an internal, motor overload device.
f. Compressor shall be factory mounted on rubber grommets.
g. Compressor motors shall have internal line break thermal, current overload and high pressure differential protection.
h. Crankcase heaters shall be utilized on all models to protect compressor with specific refrigerant charge.

23 81 19.13.L. Filter Section
1. Filters access is specified in the unit cabinet section of this specification.
2. Filters shall be held in place by a pivoting filter tray, facilitating easy removal and installation.
3. Shall consist of factory-installed, low velocity, throw-away 2-in. thick fiberglass filters.
4. Filters shall be standard, commercially available sizes.
5. Only one size filter per unit is allowed.

23 81 19.13.M. Evaporator Fan and Motor
1. Evaporator fan motor:
a. Shall have permanently lubricated bearings.
b. Shall have inherent automatic-reset thermal overload protection or circuit breaker.
c. Shall have a maximum continuous bhp rating for continuous duty operation; no safety factors above that rating shall be required.
2. Electric Drive (Direct Drive) X13 – 5 Speed/Torque Evaporator Fan:
a. Multi speed motor with easy quick adjustment settings.
b. Blower fan shall be double inlet type with forward curved blades.
c. Shall be constructed from steel with a corrosion resistant finish and dynamically balanced.
d. Standard on all 04-06 models.
3. Belt-driven Evaporator Fan:
a. Belt drive shall include an adjustable pitch motor pulley.
b. Shall use sealed, permanently lubricated ball-bearing type.
c. Blower fan shall be double inlet type with forward curved blades.
d. Shall be constructed from steel with a corrosion resistant finish and dynamically balanced.
e. Standard on all 07-09 size models. Optional on all 04-06 3-phase models.

23 81 19.13.N. Condenser Fans and Motors
1. Condenser fan motors:
a. Shall be a totally enclosed motor.
b. Shall use permanently lubricated bearings.
c. Shall have inherent thermal overload protection with an automatic reset feature.
d. Shall use a shaft down design on all sizes.
2. Condenser Fans:
a. Shall be a direct driven propeller type fan.
b. Shall have aluminum blades riveted to corrosion resistant steel spiders and shall be dynamically balanced.

23 81 19.13.O. Special Features, Options and Accessories
1. Integrated Economizers:
a. Integrated, gear driven parallel modulating blade design type capable of simultaneous economizer and compressor operation.
b. Independent modules for vertical or horizontal return configurations shall be available. Vertical return modules shall be available as a factory-installed option.

ADVANCED PRODUCT DATA

c. Damper blades shall be galvanized steel with composite gears. Plastic or composite blades on intake or return shall not be acceptable.
d. Shall include all hardware and controls to provide free cooling with outdoor air when temperature and/or humidity are below setpoints.
e. Shall be equipped with gear driven dampers for both the outdoor ventilation air and the return air for positive air stream control.
f. Shall be equipped with low leakage dampers, not to exceed 2% leakage at 1 in. wg pressure differential.
g. Shall be capable of introducing up to 100% outdoor air.
h. Shall be equipped with a barometric relief damper capable of relieving up to 100% return air.
i. Shall be designed to close damper(s) during loss-of-power situations with spring return built into motor.
j. Dry bulb outdoor air temperature sensor shall be provided as standard. Outdoor air sensor setpoint shall be adjustable and shall range from 40 to 100°F / 4 to 38°C. Additional sensor options shall be available as accessories.
k. The economizer controller shall also provide control of an accessory power exhaust unit function. Factory set at 100%, with a range of 0% to 100%.
l. The economizer shall maintain minimum airflow into the building during occupied period and provide design ventilation rate for full occupancy. A remote potentiometer may be used to override the damper setpoint.
m. Dampers shall be completely closed when the unit is in the unoccupied mode.
n. Economizer controller shall accept a 2-10Vdc CO_2 sensor input for IAQ/DCV control. In this mode, dampers shall modulate the outdoor air damper to provide ventilation based on the sensor input.
o. Compressor lockout sensor shall open at 35°F (2°C) and close at 50°F (10°C).
p. Actuator shall be direct coupled to economizer gear. No linkage arms or control rods shall be acceptable.
q. Economizer controller shall provide indications when in free cooling mode, in the DCV mode, or the exhaust fan contact is closed.
r. Economizer equipped with a mixed air sensor field mounted on the indoor fan blower side plate to control return air and outdoor air dampers to maintain 55°F (13°C) temperature.

2. Two-Position Motorized Damper
   a. Damper shall be a Two-Position Motorized Damper. Damper travel shall be from the full closed position to the field adjustable %-open setpoint.
   b. Damper shall include adjustable damper travel from 25% to 100% (full open).
   c. Damper shall include single or dual blade, gear driven dampers and actuator motor.
   d. Actuator shall be direct coupled to damper gear. No linkage arms or control rods shall be acceptable.
   e. Damper will admit up to 100% outdoor air for applicable rooftop units.
   f. Damper shall close upon indoor (evaporator) fan shutoff and/or loss of power.
   g. The damper actuator shall plug into the rooftop unit's wiring harness plug. No hard wiring shall be required.
   h. Outside air hood shall include aluminum water entrainment filter
3. Manual damper
   a. Manual damper package shall consist of damper, air inlet screen, and rain hood which can be preset to admit up to 50% outdoor air for year round ventilation.
4. Head Pressure Control Package
   a. Controller shall control coil head pressure by condenser fan speed modulation or condenser fan cycling and wind baffles.
   b. Shall consist of solid state control and condenser coil temperature sensor to maintain condensing temperature between 90°F (32°C) and 110°F (43°C) at outdoor ambient temperatures down to -20°F (-29°C).
5. Condenser Coil Hail Guard Assembly
   a. Shall protect against damage from hail.
   b. Shall be louvered design.
6. Unit Mounted, Non-Fused Disconnect Switch:
   a. Switch shall be factory-installed, internally mounted.
   b. National Electric Code (NEC) and UL approved non-fused switch shall provide unit power shutoff.
   c. Shall be accessible from outside the unit
   d. Shall provide local shutdown and lockout capability.
7. Convenience Outlet:
   a. Powered convenience outlet.
      (1.) Outlet shall be powered from main line power to the rooftop unit.

ADVANCED PRODUCT DATA

(2.) Outlet shall be powered from line side or load side of disconnect by installing contractor, as required by code. If outlet is powered from load side of disconnect, unit electrical ratings shall be UL certified and rated for additional outlet amperage.

(3.) Outlet shall be factory-installed and internally mounted with easily accessible 115-v female receptacle.

(4.) Outlet shall include 15 amp GFI receptacles with independent fuse protection.

(5.) Voltage required to operate convenience outlet shall be provided by a factory-installed step down transformer.

(6.) Outlet shall be accessible from outside the unit.

b. Non-Powered convenience outlet.

(1.) Outlet shall be powered from a separate 115-120v power source.

(2.) A transformer shall not be included.

(3.) Outlet shall be factory-installed and internally mounted with easily accessible 115-v female receptacle.

(4.) Outlet shall include 15 amp GFI receptacles.

(5.) Outlet shall be accessible from outside the unit.

8. Thru-the-Base Connectors:
   a. Kits shall provide connectors to permit electrical connections to be brought to the unit through the unit basepan.
   b. Minimum of three connection locations per unit.
9. Propeller Power Exhaust:
   a. Power exhaust shall be used in conjunction with an integrated economizer.
   b. Independent modules for vertical or horizontal return configurations shall be available.
   c. Horizontal power exhaust shall be mounted in return ductwork.
   d. Power exhaust shall be controlled by economizer controller operation. Exhaust fans shall be energized when dampers open past the 0-100% adjustable setpoint on the economizer control.
10. Roof Curbs (Vertical):
   a. Full perimeter roof curb with exhaust capability providing separate air streams for energy recovery from the exhaust air without supply air contamination.
   b. Formed galvanized steel with wood nailer strip and shall be capable of supporting entire unit weight.
   c. Permits installation and securing of ductwork to curb prior to mounting unit on the curb.
11. Medium and high Static Indoor Fan Motor(s) and Drive(s) (04-09):
   a. Medium and high static motor(s) and drive(s) shall be factory-installed to provide additional performance range.
12. Thru-the-Bottom Utility Connectors:
   a. Kit shall provide connectors to permit gas and electrical connections to be brought to the unit through the basepan.
13. Outdoor Air Enthalpy Sensor:
   a. The outdoor air enthalpy sensor shall be used to provide single enthalpy control. When used in conjunction with a return air enthalpy sensor, the unit will provide differential enthalpy control. The sensor allows the unit to determine if outside air is suitable for free cooling.
14. Return Air Enthalpy Sensor:
   a. The return air enthalpy sensor shall be used in conjunction with an outdoor air enthalpy sensor to provide differential enthalpy control.
15. Indoor Air Quality (CO_2) Sensor:
   a. Shall be able to provide demand ventilation indoor air quality (IAQ) control.
   b. The IAQ sensor shall be available in duct mount, wall mount, or wall mount with LED display. The setpoint shall have adjustment capability.
16. Smoke detectors (Factory-Installed Only):
   a. Shall be a Four-Wire Controller and Detector.
   b. Shall be environmental compensated with differential sensing for reliable, stable, and drift-free sensitivity.
   c. Shall use magnet activated test/reset sensor switches.
   d. Shall have tool-less connection terminal access.
   e. Shall have a recessed momentary switch for testing and resetting the detector.
   f. Controller shall include:
      (1.) One set of normally open alarm initiation contacts for connection to an initiating device circuit on a fire alarm control panel.

ADVANCED PRODUCT DATA

(2.) Two Form-C auxiliary alarm relays for interface with rooftop unit or other equipment.

(3.) One Form-C supervision (trouble) relay to control the operation of the Trouble LED on a remote test/reset station.

(4.) Capable of direct connection to two individual detector modules.

(5.) Can be wired to up to 14 other duct smoke detectors for multiple fan shutdown applications.

17. Time Guard
    a. Shall prevent compressor short cycling by providing a 5-minute delay (±2 minutes) before restarting a compressor after shutdown for any reason.
    b. One device shall be required per compressor.
18. Electric Heat:
    a. Heating Section
        (1.) Heater element open coil resistance wire, nickel-chrome alloy, 0.29 inches inside diameter, strung through ceramic insulators mounted on metal frame. Coil ends are staked and welded to terminal screw slots.
        (2.) Heater assemblies are provided with integral fusing for protection of internal heater circuits not exceeding 48 amps each. Auto reset thermo limit controls, magnetic heater contactors (24V coil) and terminal block all mounted in electric heater control box (minimum 18 ga galvanized steel) attached to end of heater assembly.
19. Hinged Access panels
    a. Shall provide easy access through integrated quarter turn latches.
    b. Shall be on major panels of filter, control box, fan motor and compressor.

ADVANCED PRODUCT DATA

59SP5A
Performance™ Boost, Single–Stage 4–Way Multipoise Condensing Gas Furnace Series 100

Carrier
turn to the experts

Product Data

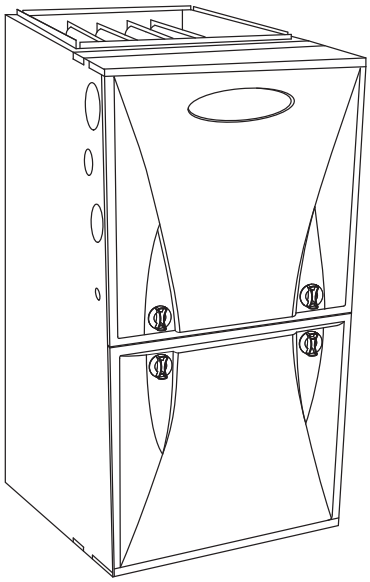

A11263

The 59SP5A Multipoise Performance™ Boost Condensing Gas Furnace features SEER-boosting year-round electrical efficiency when paired with a compatible condensing unit. Energy efficiency is at the heart of this furnace with up to 96.5% AFUE gas efficiency and the electrically-efficient basic ECM blower motor. This gas furnace also features 4-way multipoise installation flexibility, and is available in six model sizes. The 59SP5A can be vented for direct vent/two-pipe, ventilated combustion air, or single-pipe applications. All units meet California Air Quality Management District emission requirements, are design certified in Canada, and are certified for mobile/manufactured home use.

STANDARD FEATURES

- Quiet operation. Compare for yourself at HVACpartners.com.
- Most sizes meet ENERGY STAR® Version 4.0 criteria for gas furnaces: 95+ AFUE; AMACF electrical rating; 2% or less cabinet airflow leakage. ***See table on Page 2.***
- High-efficiency basic ECM multiple-speed blower motor for electrically efficient operation all year long in heating, cooling and continuous fan operation.
- Humidistat™ Control compatible; dehumidification input for better comfort.
- SmartEvap™ technology helps control humidity levels in the home when used with a compatible humidity control system.
- ComfortFan™ technology allows control of continuous fan speed from a compatible thermostat.
- Ideal height 35” (889 mm) cabinet: short enough for taller coils, but still allows enough room for service.
- Silicon Nitride Power Heat™ Hot Surface Igniter.
- External Media Filter Cabinet included.
- 4-way multipoise design for upflow, downflow or horizontal installation, with unique vent elbow and optional venting through-the-cabinet downflow venting capability.
- Single-speed inducer motor, and single-stage gas valve.
- Self diagnostics with SuperBrite LED.
- Approved for Twinning applications with accessory kit (60-14 through 120-22 models, only).
- Approved for Manufactured Housing/Mobile Home applications with MH accessory kit.
- Adjustable blower speed for heating, cooling and continuous fan
- Aluminized-steel primary heat exchanger.
- Stainless-steel condensing secondary heat exchanger.
- Propane convertible (see Accessory list).
- Factory-configured ready for upflow applications.
- Fully-insulated casing including blower section.
- Convenient Air Purifier and Humidifier connections.
- Direct-vent/sealed combustion, single-pipe venting or ventilated combustion air.
- Installation flexibility: (sidewall or vertical vent).
- Residential installations may be eligible for consumer financing through the Retail Credit Program.
- Certified to leak 2% or less of nominal air conditioning CFM delivered when pressurized to 1-in. water column with all present air inlets, air outlets, and condensate drain port(s) sealed.

Performance SERIES

ComfortHeat

ENERGY STAR
Select Models

Certified System ISO 9001

CERTIFIED

DESIGN CERTIFIED

AHRI CERTIFIED www.ahridirectory.org
Use of the AHRI Certified TM Mark indicates a manufacturer's participation in the program For verification of certification for individual products, go to www.ahridirectory.org.

SAP ORDERING NO.	CASING DIMENSIONS (IN.)			RATED HEATING OUTPUT†			HEATING AIRFLOW		COOLING CFM @ 0.5 ESP (in. W.C.)	MOTOR HP SPEED	MEDIA CABINET SUPPLIED (IN.)
	H	D	W	BTUH	AFUE	ENERGY STAR	HEATING CFM	HEATING ESP (in. W.C.)			
59SP5A040E14--10	35	29.5	14.2	39,000	96.5%	√	695	0.1	925	1/2 - 5	16
59SP5A040E17--12	35	29.5	17.5	39,000	96.5%	√	705	0.1	1085	1/2 - 5	16
59SP5A060E14--12	35	29.5	14.2	58,000	95.5%	√	940	0.12	1090	1/2 - 5	16
59SP5A060E17--14	35	29.5	17.5	58,000	96.5%	√	1000	0.12	1505	3/4 - 5	16
59SP5A080E17--16	35	29.5	17.5	78,000	96.5%	√	1360	0.15	1610	3/4 - 5	16
59SP5A080E21--20	35	29.5	21.0	78,000	96.5%	√	1360	0.15	2015	1 - 5	20
59SP5A100E21--20	35	29.5	21.0	97,000	96.3%	-	1700	0.2	2110	1 - 5	20
59SP5A120E24--22	35	29.5	24.0	117,000	96.5%	-	2125	0.2	2055	1 - 5	24

† Capacity in accordance with DOE test procedures. Ratings are position dependent. See rating plate.
‡ Heating CFM at factory default blower motor heating tap settings.
ESP – External Static Pressure
√ Meets ENERGY STAR criteria

FEATURES AND BENEFITS

SmartEvap™ Technology — When paired with a compatible thermostat, this dehumidification feature overrides the cooling blower off-delay when there is a call for dehumidification. By deactivating the blower off-delay, SmartEvap technology prevents condensate that remains on the coil after a dehumidification cycle from re-humidifying throughout the home. This results in reduced humidity and a more comfortable indoor environment for the homeowner.

Unlike competitive systems, SmartEvap technology only overrides the cooling blower off-delay when humidity control is needed. Once humidity is back in control, SmartEvap re-enables the energy-saving cooling blower off-delay.

ComfortFan™ Technology —Sometimes the constant fan setting on a standard furnace system can actually reduce homeowner comfort by providing too much or too little air! Comfort Fan technology improves comfort all year long by allowing the homeowner to select the continuous fan speed of their choice using a compatible thermostat.

HYBRID HEAT® Dual Fuel System — This system can provide more control over your monthly energy bills by automatically selecting the most economical method of heating. With HYBRID HEAT components, our system automatically switches between the gas furnace and the electric heat pump as outside temperatures change to maintain greater efficiency and comfort than with any traditional single-source heating system. The heat pump also delivers high-efficiency cooling in the summer.

Power Heat™ Igniter — Carrier's unique SiN igniter is not only physically robust but it is also electrically robust. It is capable of running at line voltage and does not require complex voltage regulators as do other brands. This unique feature further enhances the gas furnace reliability and continues Carrier's tradition of technology leadership and innovation in providing a reliable and durable product.

Performance™ ECM Blower Motor — This basic ECM, or electronically commutated motor, can provide an efficiency enhancement for select Carrier air conditioner or heat pump systems. It uses less electrical power than its PSC counterpart and also has a wider range of speeds

Reliable Heat Exchanger Design — The aluminized steel, clam shell primary heat exchanger was re-engineered to achieve greater efficiency out of a smaller size. The first two passes of the heat exchanger are based on the current 80% product, a design with more than ten years of field-proven performance and success. These innovations, paired with the continuation of a crimped, no-weld seam create an efficient, robust design for this essential component.

The condensing heat exchanger, a stainless steel fin and tube design, is positioned in the furnace to extract additional heat. Stainless steel coupling box componentry between heat exchangers has exceptional corrosion resistance in both natural gas and propane applications.

Media Filter Cabinet — Enhanced indoor air quality in the home is made easier with our media filter cabinet—a standard accessory on all deluxe furnaces. When installed as a part of the system, this cabinet allows for easy and convenient addition of a Carrier high efficiency air filter.

4-Way Multipoise Design — One model for all applications – there is no need to stock special downflow or horizontal models when one unit will do it all. The new heat exchanger design allows these units to achieve the certified AFUE in all positions.

Direct or Single-pipe Venting, or Optional Ventilated Combustion Air — This furnace can be installed as a 2-pipe (Direct Vent) furnace, in an optional ventilated combustion air application, or in single-pipe, non-direct vent applications. This provides added flexibility to meet diverse installation needs.

Sealed Combustion System — This furnace brings in combustion air from outside the furnace, which results in especially quiet operation. By sealing the entire combustion vestibule, the entire furnace can be made quieter, not just the burners.

Insulated Casing — Foil-faced insulation in the heat exchanger section of the casing minimizes heat loss. The acoustical insulation in the blower compartment reduces air and motor noise for quiet operation.

Monoport Burners — The burners are specially designed and finely tuned for smooth, quiet combustion and economical operation.

Bottom Closure — Factory-installed for side return; easily removable for bottom return. The multi-use bottom closure can also serve for roll-out protection in horizontal applications, and act as the bottom closure for the optional return air base accessory.

Blower Access Panel Switch — Automatically shuts off 115-v power to furnace whenever blower access panel is opened.

Quality Registration — Our furnaces are engineered and manufactured under an ISO 9001 registered quality system.

Certifications — This furnace is CSA (AGA and CGA) design certified for use with natural and propane gases. The furnace is factory-shipped for use with natural gas. A CSA listed gas conversion kit is required to convert furnace for use with propane gas. The efficiency is AHRI efficiency rating certified. This furnace meets California Air Quality Management District emission requirements.

SPECIFICATIONS

Heating Capacity and Efficiency		040-10	040-12	060-12	060-14	080-16	080-20	100-20	120-22
Input	High Heat (BTUH)	40,000	40,000	60,000	60,000	80,000	80,000	100,000	120,000
Output	High Heat (BTUH)	39,000	39,000	58,000	58,000	78,000	78,000	97,000	117,000
Certified Temperature Rise Range °F (°C)	High Heat	40 - 70 (22 - 39)	40 - 70 (22 - 39)	45 - 75 (25 - 42)	40 - 70 (22 - 39)	40 - 70 (22 - 39)	40 - 70 (22 - 39)	40 - 70 (22 - 39)	40 - 70 (22 - 39)

Airflow Capacity and Blower Data		040-10	040-12	060-12	060-14	080-16	080-20	100-20	120-22
Rated External Static Pressure (in. w.c.)	Heating	0.10	0.10	0.12	0.12	0.15	0.15	0.20	0.20
	Cooling	0.5	0.5	0.5	0.5	0.5	0.5	0.5	0.5
Airflow Delivery @ Rated ESP (CFM)	High Heat	695	705	940	1000	1360	1360	1700	2125
	Cooling	925	1085	1090	1505	1610	2015	2110	2055
Cooling Capacity (tons) @ 400, 350 CFM/ton	CFM/ton	2	2.5	2.5	3.5	4	5	5	5
	CFM/ton	2.5	3	3	4	4.5	5.5	6	6
Direct-Drive Motor Type		Electronically Commutated Motor (ECM)							
Direct-Drive Motor HP		1/2	1/2	1/2	3/4	3/4	1	1	1
Motor Full Load Amps		6.8	6.8	6.8	8.4	8.4	10.9	10.9	10.9
RPM Range		600 - 1200							
Speed Selections		5							
Blower Wheel Dia x Width	in.	11 x 7	11 x 8	11 x 7	11 x 8	11 x 8	11 x 10	11 x 10	11 x 11
Air Filtration System		Factory Supplied Media Cabinet Field Supplied Filter							
Filter Used for Certified Watt Data		KGAWF1506UFR							

Electrical Data		040-10	040-12	060-12	060-14	080-16	080-20	100-20	120-22
Input Voltage	Volts-Hertz-Phase	115-60-1							
Operating Voltage Range	Min-Max	104-127							
Maximum Input Amps	Amps	7.4	7.4	7.5	9.1	9.1	11.6	11.7	11.7
Unit Ampacity	Amps	10.3	10.3	10.4	12.4	12.4	15.5	15.6	15.6
Minimum Wire Size	AWG	14	14	14	14	14	12	12	12
Maximum Wire Length @ Minimum Wire Size	Feet	36	36	35	30	30	37	36	36
	(M)	(11.0)	(11.0)	(10.7)	(9.1)	(9.1)	(11.3)	(11.0)	(11.0)
Maximum Fuse/Ckt Bkr (Time-Delay Type Recommended)	Amps	15	15	15	15	15	20	20	20
Transfomer Capacity (24vac output)		40 VA							
External Control Power Available	Heating	27.9 VA							
	Cooling	34.6 VA							

Controls		040-10	040-12	060-12	060-14	080-16	080-20	100-20	120-22
Gas Connection Size		1/2” - NPT							
Burners (Monoport)		2	2	3	3	4	4	5	6
Gas Valve (Redundant)	Manufacturer	White Rodgers							
Minimum Inlet Gas pressure (in. wc)		4.5							
Maximum Inlet Gas pressure (in. wc)		13.6							
Gas Conversion Kit - Natural to Propane		KGANP50011SP							
Gas Conversion Kit - Propane to Natural		KGAPN42011SP							
Manufactured (Mobile) Home Kit		KGAMH0601KIT							
Ignition Device		Silicon Nitride							
Limit Control		165	180	165	180	170	200	180	160
Heating Blower Control (Heating Off-Delay)		Adjustable: 90, 120, 150, 180 seconds							
Cooling Blower Control (Time Delay Relay)		90 seconds							
Communication System		*none*							
Thermostat Connections		Com 24V, R, W, G, Y/Y2, DHUM, Y1							
Accessory Connections		EAC (115vac); HUM (24vac); 1-stg AC (via Y/Y2)							

* See Accessory List for part numbers available.

MODEL NUMBER NOMENCLATURE

Example of Model Number

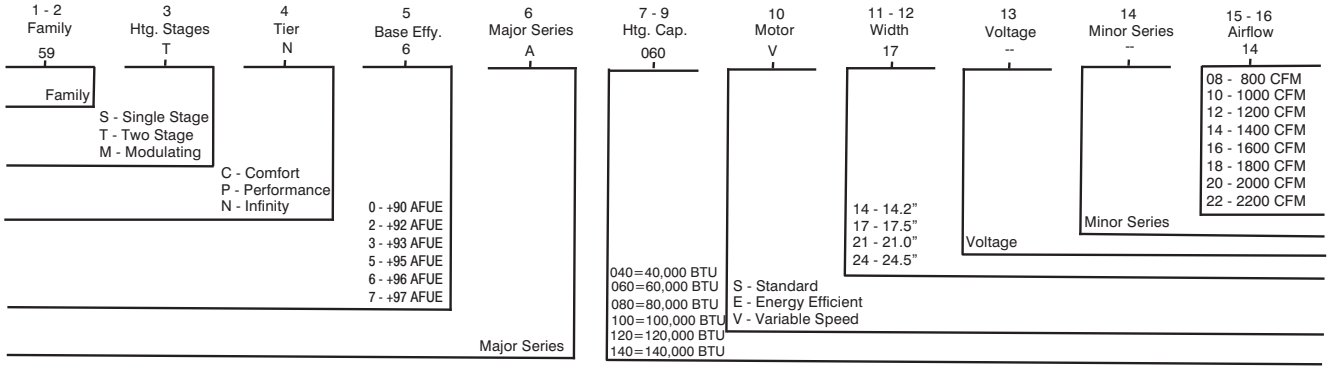

Not all familes have these models.

A12373

59SP5A

FURNACE COMPONENTS

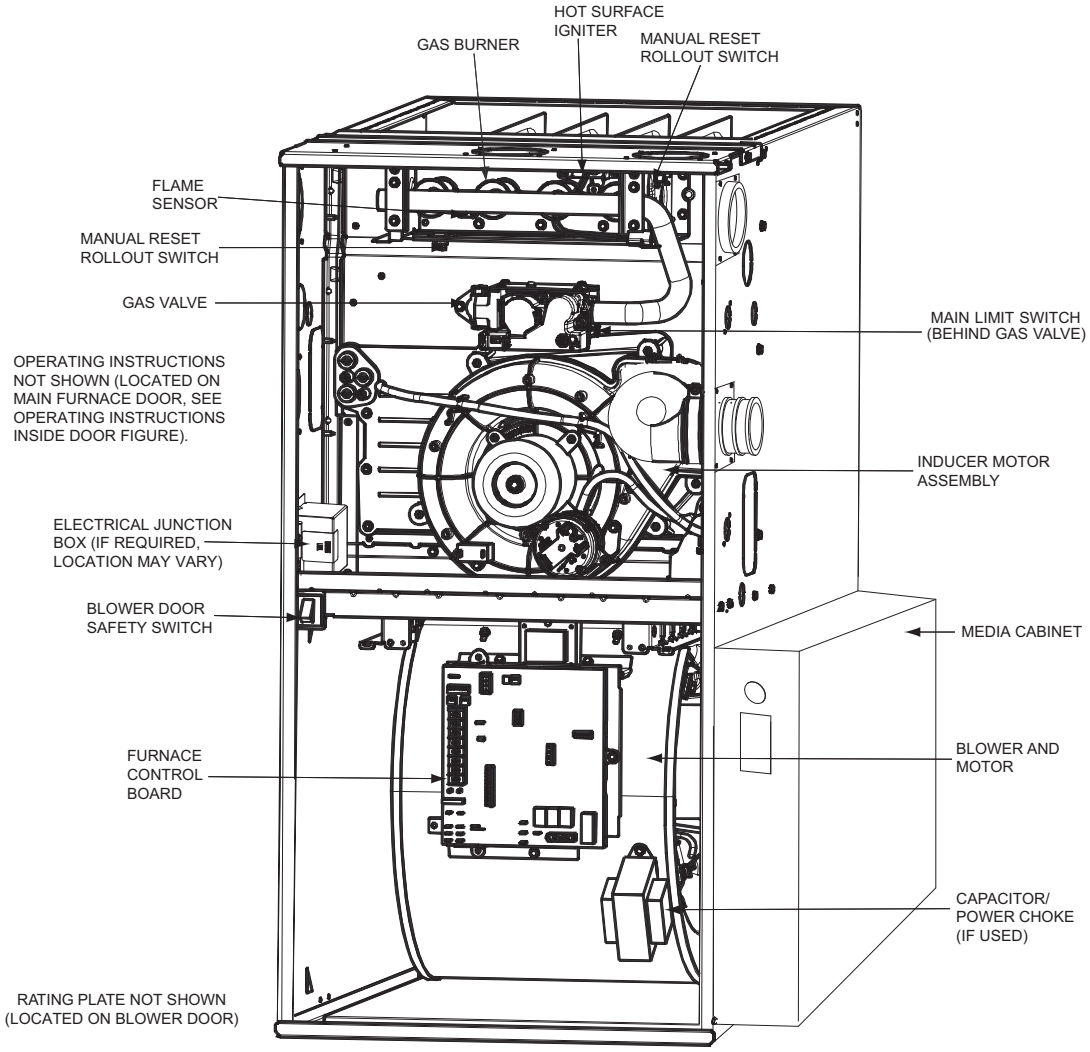

REPRESENTATIVE DRAWING ONLY, SOME MODELS MAY VARY IN APPEARANCE.

A11408

ACCESSORIES

DESCRIPTION	PART NUMBER	040–10	060–12	040–12	060–14	080-16	080-20	100-20	120-22
Venting Accessories									
Vent Kit - Through the Cabinet	KGADC0101BVC	●	●	●	●	●	●	●	●
Vent Terminal - Concentric - 2” (51 mm)	KGAVT0701CVT	See Venting Tables							
Vent Terminal - Concentric - 3” (76 mm)	KGAVT0801CVT								
Vent Terminal Bracket - 2” (51 mm)	KGAVT0101BRA								
Vent Terminal Bracket - 3” (76 mm)	KGAVT0201BRA								
Vent Kit – Rubber Coupling	KGAAC0101RVC	See Venting Tables							
Condensate Drainage Accessories									
Freeze Protect Kit - Heat Tape	KGAHT0101CFP	●	●	●	●	●	●	●	●
CPVC to PVC Drain Adapters - 1/2” CPVC to 3/4” PVC	KGAAD0110PVC	●	●	●	●	●	●	●	●
Horizontal Trap Grommet - Direct Vent	KGACK0101HCK	All DV Horizontal							
Condensate Neutralizer Kit	P908–0001	●	●	●	●	●	●	●	●
External Trap Kit	KGAET0201ETK	●	●	●	●	●	●	●	●
Ductwork Adapter Accessories									
Furnace Base Kit for Combustible Floors	KGASB0201ALL	●	●	●	●	●	●	●	●
Coil Adapter Kits – No Offset	KGADA0101ALL	●	●	●	●	●	●	●	●
Coil Adapter Kits – Single Offset	KGADA0201ALL	●	●	●	●	●	●	●	●
Coil Adapter Kits – Double Offset	KGADA0301ALL	●	●	●	●	●	●	●	●
Return Air Base (Upflow Applications) 14.0–in. wide	KGARP0301B14	●	●						
Return Air Base (Upflow Applications) 17.5–in. wide	KGARP0301B17			●	●	●			
Return Air Base (Upflow Applications) 21.0–in. wide	KGARP0301B21						●	●	
Return Air Base (Upflow Applications) 24.5–in. wide	KGARP0301B24								●
IAQ Device Duct Adapters 20.0–in. IAQ to 16 in. Side Return	KGAAD0101MEC	20”x25” IAQ Devices							
IAQ Device Duct Adapters 24.0–in. IAQ to 16 in. Side Return	KGAAD0201MEC	24”x25” IAQ Devices							
Gas Conversion Accessories									
Mobile Home Kit	KGAMH0601KIT	●	●	●	●	●	●	●	●
Gas Conversion Kit - Nat to LP	KGANP50011SP	●	●	●	●	●	●	●	●
Gas Conversion Kit - LP to Nat	KGAPN42011SP	●	●	●	●	●	●	●	●
Gas Orifice Kit - #42 (Nat Gas)	LH32DB207	●	●	●	●	●	●	●	●
Gas Orifice Kit - #43 (Nat Gas)	LH32DB202	●	●	●	●	●	●	●	●
Gas Orifice Kit - #44 (Nat Gas)	LH32DB200	●	●	●	●	●	●	●	●
Gas Orifice Kit - #45 (Nat Gas)	LH32DB205	●	●	●	●	●	●	●	●
Gas Orifice Kit - #46 (Nat Gas)	LH32DB208	●	●	●	●	●	●	●	●
Gas Orifice Kit - #47 (Nat Gas)	LH32DB078	●	●	●	●	●	●	●	●
Gas Orifice Kit - #48 (Nat Gas)	LH32DB076	●	●	●	●	●	●	●	●
Gas Orifice Kit - #54 (LP)	LH32DB203	●	●	●	●	●	●	●	●
Gas Orifice Kit - #55 (LP)	LH32DB201	●	●	●	●	●	●	●	●
Gas Orifice Kit - #56 (LP)	LH32DB206	●	●	●	●	●	●	●	●
Gas Orifice Kit - 1.25mm (LP)	LH32DB209	●	●	●	●	●	●	●	●
Gas Orifice Kit - 1.30mm (LP)	LH32DB210	●	●	●	●	●	●	●	●
Control Accessories									
Twinning Kit	KGATW0701HSI				●	●	●	●	●
IAQ Accessories									
Filter Pack (6 pack) – Washable - 16x25x1 (406x635x25 mm)	KGAWF1306UFR	●	●	●	●	●	●	●	●
Filter Pack (6 pack) – Washable - 24x25x1 (610x635x25 mm)	KGAWF1506UFR	●	●	●	●	●	●	●	●
EZ-Flex Filter - 16” (406 mm)	EXPXXFIL0016	Use with EZXCAB–1016							
EZ-Flex Filter - 20” (508 mm)	EXPXXFIL0020	Use with EZXCAB–1020							
EZ-Flex Filter - 24” (610 mm)	EXPXXFIL0024	Use with EZXCAB–1024							
EZ-Flex Filter with End Caps - 16” (406 mm)	EXPXXUNV0016	Use with EZXCAB–1016							
EZ-Flex Filter with End Caps - 20” (508 mm)	EXPXXUNV0020	Use with EZXCAB–1020							
EZ-Flex Filter with End Caps - 24” (610 mm)	EXPXXUNV0024	Use with EZXCAB–1024							
Cartridge Media Filter - 16” (406 mm)	FILXXCAR0016	Use with FILCABXL–1016							
Cartridge Media Filter - 20” (508 mm)	FILXXCAR0020	Use with FILCABXL–1020							
Cartridge Media Filter - 24” (610 mm)	FILXXCAR0024	Use with FILCABXL–1024							
Carrier Performance Air Purifier - 16x25 (508x635 mm)	PGAPXX1625	Up to 1600 CFM							
Carrier Performance Air Purifier - 20x25 (508x635 mm)	PGAPXX2025	Up to 2000 CFM							
Carrier Performance Air Purifier Repl Filter - 16x25 (406x635 mm)	PGAPAXXCAR1625	GAPAAXCC1625							
Carrier Performance Air Purifier Repl. Filter - 20x25 (508x635 mm)	PGAPAXXCAR2025	GAPAAXCC2025							

● = Used with the model furnace

AIR DELIVERY - CFM (BOTTOM RETURN WITH FILTER)

UNIT SIZE	RETURN-AIR CONNECTION	SPEED TAPS [2, 3]	EXTERNAL STATIC PRESSURE (IN.W.C.)									
			0.1	0.2	0.3	0.4	0.5	0.6	0.7	0.8	0.9	1.0
040–10	SIDE/BOTTOM	Gray	1120	1080	1030	980	925	875	820	760	690	630
		Yellow	880	845	810	780	740	710	680	640	615	570
		Blue	695	665	620	575	535	495	455	420	370	280
		Orange	640	595	540	495	460	420	370	310	260	230
		Red	570	525	475	425	385	330	255	220	- [6]	- [6]
040–12	SIDE/BOTTOM	Gray	1255	1220	1175	1130	1085	1040	990	940	880	825
		Yellow	940	905	870	840	805	770	735	695	665	630
		Blue	705	670	630	575	540	500	455	410	380	325
		Orange	580	535	480	425	380	335	290	235	- [6]	- [6]
		Red	555	485	425	375	330	280	215	- [6]	- [6]	- [6]
060–12	SIDE/BOTTOM	Gray	1265	1225	1185	1140	1090	1030	975	920	850	760
		Yellow	1115	1085	1060	1030	1000	970	930	880	810	715
		Orange	1000	970	940	910	880	845	815	770	735	695
		Blue	945	915	885	855	820	785	745	705	675	635
		Red	770	740	700	660	620	575	540	500	455	415
060–14	SIDE/BOTTOM	Gray	1720	1670	1620	1565	1505	1440	1375	1295	1220	1135
		Yellow	1325	1285	1255	1220	1185	1145	1115	1075	1040	1000
		Blue	1010	970	925	875	835	785	745	690	660	620
		Orange	1160	1115	1080	1045	1000	960	920	875	840	785
		Red	785	715	655	595	530	490	435	385	340	285
080–16	SIDE/BOTTOM	Gray	1810	1770	1720	1665	1610	1540	1475	1400	1315	1235
		Yellow	1535	1500	1475	1435	1405	1370	1340	1310	1245	1160
		Blue	1380	1340	1305	1270	1240	1200	1165	1130	1090	1050
		Orange	1180	1130	1095	1060	1015	975	935	895	850	800
		Red	1100	1045	1010	970	920	885	845	790	745	690
080–20	BOTTOM or TWO-SIDES [4, 5]	Gray	2290	2225	2155	2090	2015	1930	1845	1750	1640	1515
		Yellow	1810	1760	1725	1685	1640	1600	1555	1520	1480	1415
		Blue	1385	1340	1285	1240	1200	1140	1090	1050	995	950
		Orange	1560	1520	1475	1430	1385	1335	1295	1240	1200	1150
		Red	1055	985	910	860	795	750	680	615	565	495
100–20	BOTTOM or TWO-SIDES [4, 5]	Gray	2340	2295	2250	2195	2110	2030	1935	1835	1725	1605
		Yellow	1950	1900	1855	1800	1755	1705	1655	1605	1560	1485
		Blue	1750	1700	1650	1605	1555	1500	1455	1395	1350	1300
		Orange	1570	1520	1460	1410	1350	1300	1240	1195	1140	1095
		Red	1350	1280	1225	1155	1105	1045	1000	950	895	830
120–22	BOTTOM or TWO-SIDES [4, 5]	Gray	2275	2230	2185	2130	2055	1950	1825	1710	1610	1500
		Yellow	1875	1820	1770	1720	1660	1600	1550	1505	1450	1390
		Blue	2170	2125	2075	2025	1975	1900	1790	1695	1590	1470
		Orange [3]	1475	1420	1350	1280	1215	1165	1105	1050	995	930
		Red [3]	1625	1565	1505	1445	1385	1325	1275	1225	1170	1130

NOTE:

1. A filter is required for each return–air inlet. Airflow performance includes a 3/4–in. (19 mm) washable filter media such as contained in a factory–authorized accessory filter rack. See accessory list. To determine airflow performance without this filter, assume an additional 0.1 in. w.c. available external static pressure.
2. **ADJUST THE BLOWER SPEED TAPS AS NECESSARY FOR THE PROPER AIR TEMPERATURE RISE FOR EACH INSTALLATION.**
3. Shaded areas indicate that this airflow range is **BELOW THE RANGE ALLOWED FOR HEATING OPERATION. THESE AIRFLOW RANGES MAY ONLY BE USED FOR COOLING.**
4. Airflows over 1800 CFM require bottom return, two–side return, or bottom and side return. A minimum filter size of 20” x 25” (508 x 635 mm) is required.
5. For upflow applications, air entering from one side into both the side of the furnace and a return air base counts as a side and bottom return.
6. The “–” entry indicates an unstable operating condition.

MAXIMUM EQUIVALENT VENT LENGTH - FT. (M)

Table 1 – Maximum Equivalent Vent Length - Ft. (M)
0 to 4500 Ft. (0 to 1370 M) Altitude

NOTE: Maximum Equivalent Vent Length (MEVL) includes standard and concentric vent termination and does NOT include elbows. Use Table 2 - Deductions from Maximum Equivalent Vent Length to determine allowable vent length for each application.

Altitude FT (M)	Unit Size BTU/Hr	DIRECT VENT (2-PIPE) AND NON-DIRECT VENT (1-PIPE)									
		Vent Pipe Diameter (in.) [1]									
		1-1/2		2		2-1/2		3		4	
0 to 2000 (0 to 610)	40,000 [3]	50	(15.2)	210	(64.0)	250	(76.2)	NA [2]		NA	
	60,000	30	(9.1)	135	(41.1)	235	(71.6)	265	(80.8)	NA	
	80,000	20	(6.1)	70	(21.3)	175	(53.3)	235	(71.6)	265	(80.8)
	100,000	NA		25	(7.6)	110	(33.5)	235	(71.6)	265	(80.8)
	120,000	NA		NA		15	(4.6)	100	(30.5)	250	(76.2)
	140,000 [4]	NA		NA		10	(3.0)	90	(27.4)	210	(64.0)
2001 to 3000 (610 to 914)	40,000	45	(13.7)	198	(60.4)	232	(70.7)	NA		NA	
	60,000	27	(8.2)	127	(38.7)	222	(67.7)	250	(76.2)	NA	
	80,000	17	(5.2)	64	(19.5)	165	(50.3)	222	(67.7)	249	(75.9)
	100,000	NA		22	(6.7)	104	(31.7)	223	(68.0)	250	(76.2)
	120,000	NA		NA		11	(3.4)	93	(28.3)	237	(72.2)
	140,000 [4]	NA		NA		NA		80	(24.4)	185	(56.4)
3001 to 4000 (914 to 1219)	40,000	39	(11.9)	184	(56.1)	214	(65.2)	NA		NA	
	60,000	23	(7.0)	119	(36.3)	210	(64.0)	235	(71.6)	NA	
	80,000	15	(4.6)	59	(18.0)	155	(47.2)	210	(64.0)	232	(70.7)
	100,000	NA		19	(5.8)	98	(29.9)	211	(64.3)	236	(71.9)
	120,000	NA		NA		8	(2.4)	86	(26.2)	224	(68.3)
	140,000 [4]	NA		NA		NA		79	(24.1)	158	(48.2)
4001 to 4500 (1219 to 1370)	40,000	36	(11.0)	177	(53.9)	205	(62.5)	NA		NA	
	60,000	21	(6.4)	115	(35.1)	204	(62.2)	228	(69.5)	NA	
	80,000	14	(4.3)	56	(17.1)	150	(45.7)	202	(61.6)	224	(68.3)
	100,000	NA		17	(5.2)	94	(28.7)	205	(62.5)	229	(69.8)
	120,000	NA		NA		NA		83	(25.3)	217	(66.1)
	140,000 [4]	NA		NA		NA		69	(21.0)	146	(44.5)

NOTES: See notes at end of venting tables.
See Table 3 for altitudes over 4500 ft. (1370 M)

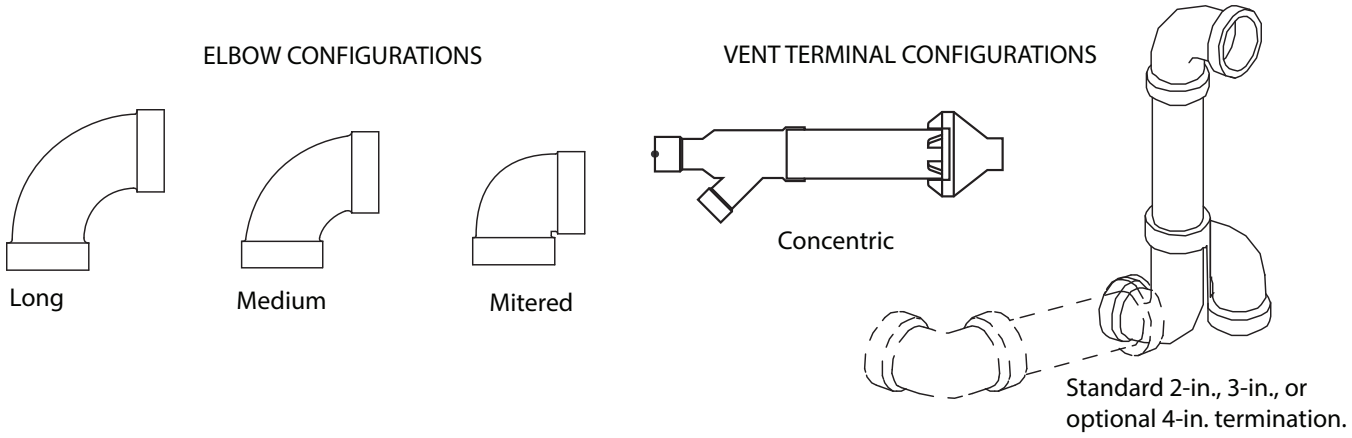

Table 2 – Deductions from Maximum Equivalent Vent Length - Ft. (M)

Pipe Diameter (in):	1-1/2		2		2-1/2		3		4	
Mitered 90° Elbow	8	(2.4)	8	(2.4)	8	(2.4)	8	(2.4)	8	(2.4)
Medium Radius 90° Elbow	5	(1.5)	5	(1.5)	5	(1.5)	5	(1.5)	5	(1.5)
Long Radius 90° Elbow	3	(0.9)	3	(0.9)	3	(0.9)	3	(0.9)	3	(0.9)
Mitered 45° Elbow	4	(1.2)	4	(1.2)	4	(1.2)	4	(1.2)	4	(1.2)
Medium Radius 45° Elbow	2.5	(0.8)	2.5	(0.8)	2.5	(0.8)	2.5	(0.8)	2.5	(0.8)
Long Radius 45° Elbow	1.5	(0.5)	1.5	(0.5)	1.5	(0.5)	1.5	(0.5)	1.5	(0.5)
Tee	16	(4.9)	16	(4.9)	16	(4.9)	16	(4.9)	16	(4.9)
Concentric Vent Termination	NA		0	(0.0)	NA		0	(0.0)	NA	
Standard Vent Termination	0	(0.0)	0	(0.0)	0	(0.0)	0	(0.0)	0	(0.0)

Venting System Length Calculations

The Total Equivalent Vent Length (TEVL) for **EACH** combustion air or vent pipe equals the length of the venting system, plus the equivalent length of elbows used in the venting system from Table 2.

Standard vent terminations or factory accessory concentric vent terminations count for zero deduction.

See vent system manufacturer's data for equivalent lengths of flexible vent pipe or other termination systems. **DO NOT ASSUME** that one foot of flexible vent pipe equals one foot of straight PVC/ABS DWV vent pipe.

Compare the Total Equivalent Vent Length to the Maximum Equivalent Vent Lengths in Tables 1 and 3.

Example 1

A direct-vent 60,000 Btuh furnace installed at 2100 ft. (640 M). Venting system includes, **FOR EACH PIPE**, 100 feet (30 M) of vent pipe, 95 feet (28 M) of combustion air inlet pipe, (3) 90° long radius elbows, (2) 45° long radius elbows and a factory accessory concentric vent kit.

Can this application use 2-in. (50 mm ND) PVC/ABS DWV vent piping?

Measure the required linear length of air inlet and vent pipe; insert the longest of the two here:					100 ft	Use length of the longer of the vent or air inlet piping system
Add equiv length of (3) 90° long-radius elbows (use the highest number of elbows for either the vent or inlet pipe)	3	x	3 ft	=	9 ft.	From Table 2
Add equiv length of (2) 45° long-radius elbows (use the highest number of elbows for either the vent or inlet pipe)	2	x	1.5 ft	=	3 ft.	From Table 2
Add equiv length of vent termination					0 ft.	From Table 2
Add correction for flexible vent pipe, if any					0 ft.	From Vent Manufacturer's instructions; zero for PVC/ABS DWV
Total Equivalent Vent Length (TEVL)					112 ft.	Add all of the above lines
Maximum Equivalent Vent Length (MEVL)					127 ft.	For 2" pipe from Table 1
Is TEVL less than MEVL?					**YES**	**Therefore, 2" pipe may be used**

Example 2

A direct-vent 60,000 Btuh furnace installed at 2100 ft. (640 M) Venting system includes, **FOR EACH PIPE**, 100 feet (30 M) of vent pipe, 95 feet (28 M) of combustion air inlet pipe, (3) 90° long radius elbows, and a polypropylene concentric vent kit. Also includes 20 feet (6.1 M) of flexible polypropylene vent pipe, included within the 100 feet (30 M) of vent pipe.

Assume that one meter of flexible 60 mm or 80 mm polypropylene pipe equals 1.8 meters of PVC/ABS pipe. **VERIFY FROM VENT MANUFACTURER'S INSTRUCTIONS.**

Can this application use 60 mm (O.D.) polypropylene vent piping? If not what size piping can be used?

Measure the required linear length of air inlet and vent pipe; insert the longest of the two here:					100 ft	Use length of the longer of the vent or air inlet piping system
Add equiv length of (3) 90° long-radius elbows (use the highest number of elbows for either the vent or inlet pipe)	3	x	3 ft	=	9 ft.	From Vent Manufacturer's instructions
Add equiv length of (2) 45° long-radius elbows (use the highest number of elbows for either the vent or inlet pipe)	0	x		=	0 ft.	From Vent Manufacturer's instructions
Add equiv length of vent termination	9 M	x	3 ft/M	=	18 ft.	From Vent Manufacturer's instructions
Add correction for flexible vent pipe, if any	1.8	x	20 ft	=	36 ft.	From Vent Manufacturer's instructions
Total Equivalent Vent Length (TEVL)					163 ft.	Add all of the above lines
Maximum Equivalent Vent Length (MEVL)					127 ft.	For 2" pipe from Table 1
Is TEVL less than MEVL?					**NO**	**Therefore, 60mm pipe may NOT be used; try 80 mm**
Maximum Equivalent Vent Length (MEVL)					250 ft.	For 3" pipe from Table 1
Is TEVL less than MEVL?					**YES**	**Therefore, 80 mm pipe may be used**

MAXIMUM EQUIVALENT VENT LENGTH - FT. (M) (CONTINUED)

Table 3 – Maximum Equivalent Vent Length - Ft. (M)
4501 to 10,000 Ft. (0 to 1370 M) Altitude

NOTE: Maximum Equivalent Vent Length (MEVL) includes standard and concentric vent termination and does NOT include elbows. Use Table 2 - Deductions from Maximum Equivalent Vent Length to determine allowable vent length for each application.

Altitude FT (M) [5]	Unit Size	DIRECT VENT (2-PIPE) AND SINGLE-PIPE									
		Vent Pipe Diameter (in.) [1]									
		1-1/2		2		2-1/2		3		4	
4501 to 5000 (1370 to 1524)	40,000	33	(10.1)	171	(52.1)	196	(59.7)	NA [2]		NA	
	60,000	20	(6.1)	111	(33.8)	198	(60.4)	221	(67.4)	NA	
	80,000	13	(4.0)	54	(16.5)	146	(44.5)	195	(59.4)	216	(65.8)
	100,000	NA		16	(4.9)	91	(27.7)	200	(61.0)	222	(67.7)
	120,000	NA		NA		NA		80	(24.4)	211	(64.3)
	140,000 [4]	NA		NA		NA		60	(18.3)	134	(40.8)
5001 to 6000 (1524 to 1829)	40,000	27	(8.2)	158	(48.2)	179	(54.6)	NA		NA	
	60,000	16	(4.9)	103	(31.4)	186	(56.7)	207	(63.1)	NA	
	80,000	11	(3.4)	49	(14.9)	137	(41.8)	183	(55.8)	200	(61.0)
	100,000	NA		12	(3.7)	85	(25.9)	188	(57.3)	208	(63.4)
	120,000	NA		NA		NA		74	(22.6)	199	(60.7)
	140,000 [4]	NA		NA		NA		50	(15.2)	109	(33.2)
6001 to 7000 (1829 to 2134)	40,000	21	(6.4)	145	(44.2)	162	(49.4)	NA		NA	
	60,000	13	(4.0)	96	(29.3)	174	(53.0)	194	(59.1)	NA	
	80,000	NA		44	(13.4)	120	(36.6)	171	(52.1)	185	(56.4)
	100,000	NA		10	(3.0)	79	(24.1)	178	(54.3)	195	(59.4)
	120,000	NA		NA		NA		68	(20.7)	187	(57.0)
	140,000 [4]	NA		NA		NA		41	(12.5)	87	(26.5)
7001 to 8000 (2134 to 2438)	40,000	15	(4.6)	133	(40.5)	146	(44.5)	NA		NA	
	60,000	10	(3.0)	89	(27.1)	163	(49.7)	181	(55.2)	NA	
	80,000	NA		40	(12.2)	120	(36.6)	159	(48.5)	170	(51.8)
	100,000	NA		NA		73	(22.3)	167	(50.9)	182	(55.5)
	120,000	NA		NA		NA		62	(18.9)	175	(53.3)
	140,000 [4]	NA		NA		NA		32	(9.8)	63	(19.2)
8001 to 9000 (2438 to 2743)	40,000	10	(3.0)	121	(36.9)	130	(39.6)	NA		NA	
	60,000	7	(2.1)	82	(25.0)	152	(46.3)	168	(51.2)	NA	
	80,000	NA		35	(10.7)	111	(33.8)	148	(45.1)	156	(47.5)
	100,000	NA		NA		67	(20.4)	157	(47.9)	170	(51.8)
	120,000	NA		NA		NA		56	(17.1)	164	(50.0)
	140,000 [4]	NA		NA		NA		23	(7.0)	42	(12.8)
9001 to 10,000 (2743 to 3048)	40,000	5	(1.5)	110	(33.5)	115	(35.1)	NA		NA	
	60,000	NA		76	(23.2)	142	(43.3)	156	(47.5)	NA	
	80,000	NA		31	(9.4)	103	(31.4)	137	(41.8)	142	(43.3)
	100,000	NA		NA		62	(18.9)	147	(44.8)	157	(47.9)
	120,000	NA		NA		NA		51	(15.5)	153	(46.6)
	140,000 [4]	NA		NA		NA		16	(4.9)	20	(6.1)

NOTES:
1. Use only the vent pipe sizes shown for each furnace. It is NOT necessary to choose the smallest diameter pipe possible for venting.
2. NA – Not allowed. Pressure switch will not close, or flame disturbance may result.
3. Total equivalent vent lengths under 10' for 40,000 BTUH furnaces from 0 to 2000 ft. (0 to 610 M) above sea level require use of an outlet choke plate . **Failure to use an outlet choke when required may result in flame disturbance or flame sense lockout.**
4. Not all furnace families include 140,000 BTUH input models.
5. Vent sizing for Canadian installations over 4500 ft (1370 M) above sea level are subject to acceptance by local authorities having jurisdiction.
6. Size both the combustion air and vent pipe independently, then use the larger size for both pipes.
7. Assume the two 45° elbows equal one 90° elbow. Wide radius elbows are desirable and may be required in some cases.
8. Elbow and pipe sections within the furnace casing and at the vent termination should not be included in vent length or elbow count.
9. The minimum pipe length is 5 ft. (1.5 M) linear feet (meters) for all applications.
10. Use 3–in. (76 mm) diameter vent termination kit for installations requiring 4–in. (102 mm) diameter pipe.

MAXIMUM ALLOWABLE EXPOSED VENT LENGTHS INSULATION TABLE - FT. (M)

Maximum Length of Uninsulated and Insulated Vent Pipe-Ft (M)																	
Single Stage Furnace Input	Winter Design Temp ° F (° C)	Pipe Length in Ft. & M	No Insulation					3/8-in. (9.5 mm) Insulation					1/2-in. (12.7 mm) Insulation				
			Pipe Diameter-inches (mm)					Pipe Diameter-inches (mm)					Pipe Diameter-inches (mm)				
			1 1/2	2	2 1/2	3	4	1 1/2	2	2 1/2	3	4	1 1/2	2	2 1/2	3	4
			(38)	(51)	(64)	(76)	(102)	(38)	(51)	(64)	(76)	(102)	(38)	(51)	(64)	(76)	(102)
40000	20 (-10)	Ft.	48	42	42	N/A	N/A	50	122	111	N/A	N/A	50	144	130	N/A	N/A
		M	14.6	12.8	12.8	N/A	N/A	15.2	37.2	33.8	N/A	N/A	15.2	43.9	39.6	N/A	N/A
	0 (-20)	Ft.	25	19	17	N/A	N/A	50	75	66	N/A	N/A	50	90	79	N/A	N/A
		M	7.6	5.8	5.2	N/A	N/A	15.2	22.9	20.1	N/A	N/A	15.2	27.4	24.1	N/A	N/A
	-20 (-30)	Ft.	14	7	5	N/A	N/A	50	52	45	N/A	N/A	50	64	55	N/A	N/A
		M	4.3	2.1	1.5	N/A	N/A	15.2	15.8	13.7	N/A	N/A	15.2	19.5	16.8	N/A	N/A
	-40 (-40)	Ft.	7	0	0	N/A	N/A	50	38	31	N/A	N/A	50	48	40	N/A	N/A
		M	2.1	0.0	0.0	N/A	N/A	15.2	11.6	9.4	N/A	N/A	15.2	14.6	12.2	N/A	N/A
60000	20 (-10)	Ft.	30	61	61	54	N/A	30	135	163	142	N/A	30	135	191	166	N/A
		M	9.1	18.6	18.6	16.5	N/A	9.1	41.1	49.7	43.3	N/A	9.1	41.1	58.2	50.6	N/A
	0 (-20)	Ft.	30	31	30	23	N/A	30	113	100	85	N/A	30	135	120	101	N/A
		M	9.1	9.4	9.1	7.0	N/A	9.1	34.4	30.5	25.9	N/A	9.1	41.1	36.6	30.8	N/A
	-20 (-30)	Ft.	24	17	15	7	N/A	30	81	70	57	N/A	30	98	85	70	N/A
		M	7.3	5.2	4.6	2.1	N/A	9.1	24.7	21.3	17.4	N/A	9.1	29.9	25.9	21.3	N/A
	-40 (-40)	Ft.	15	8	5	0	N/A	30	61	52	40	N/A	30	75	64	51	N/A
		M	4.6	2.4	1.5	0.0	N/A	9.1	18.6	15.8	12.2	N/A	9.1	22.9	19.5	15.5	N/A
80000	20 (-10)	Ft.	20	70	78	70	60	20	70	175	183	154	20	70	175	215	181
		M	6.1	21.3	23.8	21.3	18.3	6.1	21.3	53.3	55.8	46.9	6.1	21.3	53.3	65.5	55.2
	0 (-20)	Ft.	20	42	41	33	21	20	70	132	111	89	20	70	157	133	107
		M	6.1	12.8	12.5	10.1	6.4	6.1	21.3	40.2	33.8	27.1	6.1	21.3	47.9	40.5	32.6
	-20 (-30)	Ft.	20	25	23	14	1	20	70	94	77	57	20	70	113	94	71
		M	6.1	7.6	7.0	4.3	0.3	6.1	21.3	28.7	23.5	17.4	6.1	21.3	34.4	28.7	21.6
	-40 (-40)	Ft.	20	14	12	3	0	20	70	71	56	38	20	70	86	70	50
		M	6.1	4.3	3.7	0.9	0.0	6.1	21.3	21.6	17.1	11.6	6.1	21.3	26.2	21.3	15.2
100000	20 (-10)	Ft.	N/A	25	99	89	78	N/A	25	110	233	265	N/A	25	110	235	229
		M	N/A	7.6	30.2	27.1	23.8	N/A	7.6	33.5	71.0	80.8	N/A	7.6	33.5	71.6	69.8
	0 (-20)	Ft.	N/A	25	55	46	33	N/A	25	110	145	117	N/A	25	110	173	140
		M	N/A	7.6	16.8	14.0	10.1	N/A	7.6	33.5	44.2	35.7	N/A	7.6	33.5	52.7	42.7
	-20 (-30)	Ft.	N/A	25	34	24	11	N/A	25	110	103	79	N/A	25	110	124	97
		M	N/A	7.6	10.4	7.3	3.4	N/A	7.6	33.5	31.4	24.1	N/A	7.6	33.5	37.8	29.6
	-40 (-40)	Ft.	N/A	23	20	11	0	N/A	25	95	77	55	N/A	25	110	94	70
		M	N/A	7.0	6.1	3.4	0.0	N/A	7.6	29.0	23.5	16.8	N/A	7.6	33.5	28.7	21.3
120000	20 (-10)	Ft.	N/A	N/A	15	99	86	N/A	N/A	15	100	219	N/A	N/A	15	100	250
		M	N/A	N/A	4.6	30.2	26.2	N/A	N/A	4.6	30.5	66.8	N/A	N/A	4.6	30.5	76.2
	0 (-20)	Ft.	N/A	N/A	15	51	38	N/A	N/A	15	100	130	N/A	N/A	15	100	156
		M	N/A	N/A	4.6	15.5	11.6	N/A	N/A	4.6	30.5	39.6	N/A	N/A	4.6	30.5	47.5
	-20 (-30)	Ft.	N/A	N/A	15	28	14	N/A	N/A	15	100	88	N/A	N/A	15	100	108
		M	N/A	N/A	4.6	8.5	4.3	N/A	N/A	4.6	30.5	26.8	N/A	N/A	4.6	30.5	32.9
	-40 (-40)	Ft.	N/A	N/A	15	14	0	N/A	N/A	15	85	62	N/A	N/A	15	100	79
		M	N/A	N/A	4.6	4.3	0.0	N/A	N/A	4.6	25.9	18.9	N/A	N/A	4.6	30.5	24.1
140000	20 (-10)	Ft.	N/A	N/A	10	90	99	N/A	N/A	10	90	210	N/A	N/A	10	90	210
		M	N/A	N/A	3.0	27.4	30.2	N/A	N/A	3.0	27.4	64.0	N/A	N/A	3.0	27.4	64.0
	0 (-20)	Ft.	N/A	N/A	10	61	47	N/A	N/A	10	90	153	N/A	N/A	10	90	183
		M	N/A	N/A	3.0	18.6	14.3	N/A	N/A	3.0	27.4	46.6	N/A	N/A	3.0	27.4	55.8
	-20 (-30)	Ft.	N/A	N/A	10	35	21	N/A	N/A	10	90	104	N/A	N/A	10	90	128
		M	N/A	N/A	3.0	10.7	6.4	N/A	N/A	3.0	27.4	31.7	N/A	N/A	3.0	27.4	39.0
	-40 (-40)	Ft.	N/A	N/A	10	20	NA	N/A	N/A	10	90	75	N/A	N/A	10	90	94
		M	N/A	N/A	3.0	6.1	NA	N/A	N/A	3.0	27.4	22.9	N/A	N/A	3.0	27.4	28.7

*Not all families have these models.

RETURN AIR TEMPERATURE

This furnace is designed for continuous return-air minimum temperature of 60°F (15°C) db or intermittent operation down to 55°F (13°C) db such as when used with a night setback thermometer. Return-air temperature must not exceed 80°F (27°C) db. Failure to follow these return air limits may affect reliability of heat exchangers, motors and controls.

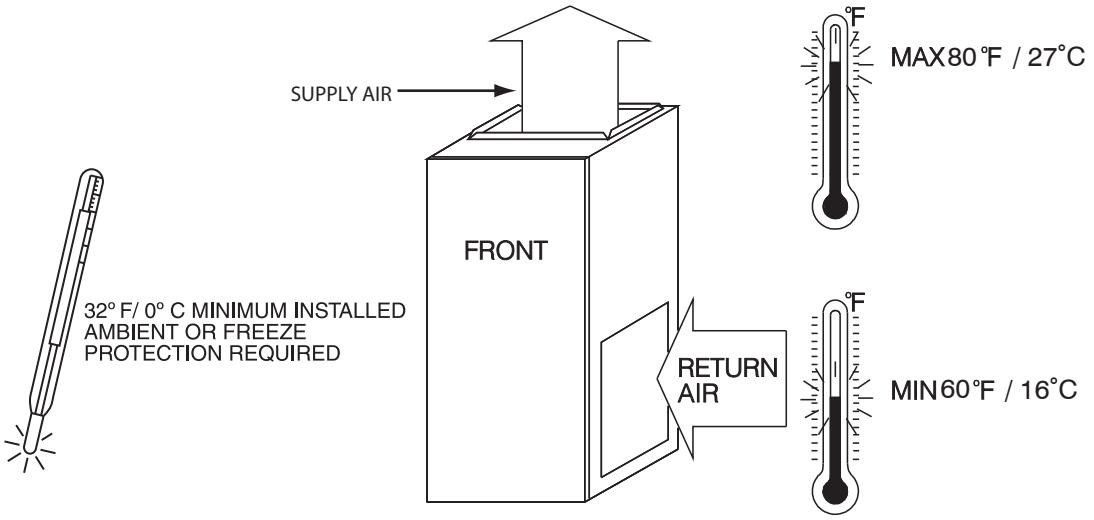

A10490

MINIMUM CLEARANCES TO COMBUSTIBLE MATERIALS

POSITION	CLEARANCE
Rear	0 (0 mm)
Front (Combustion air openings in furnace and in structure)	1 in. (25 mm)
Required for service**	24 in. (610 mm)*
All Sides of Supply Plenum**	1 in. (25 mm)
Sides	0 (0 mm)
Vent	0 (0 mm)
Top of Furnace	1 in. (25 mm)

* Recommended

**Consult your local building codes

COMBUSTION-AIR PIPE FOR NON-DIRECT (1-PIPE) VENT APPLICATION

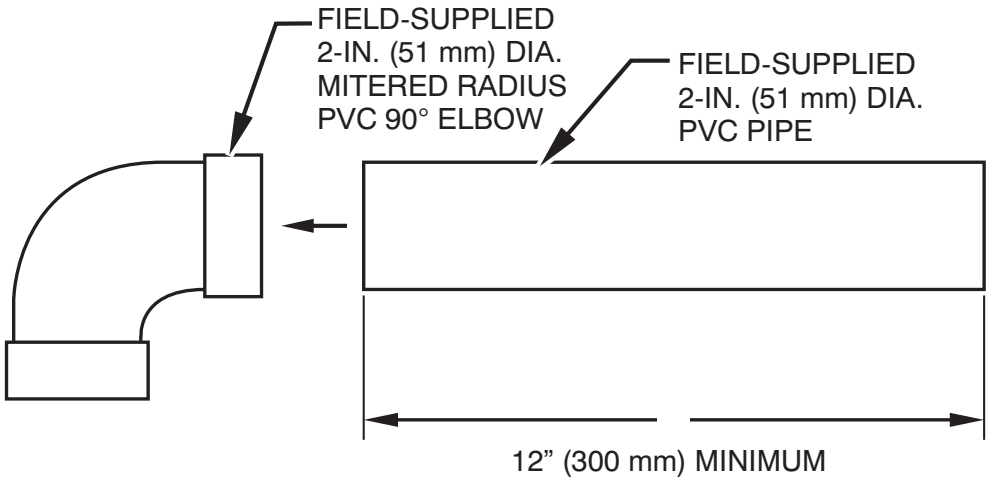

A12376

NOTE: See Installation Instructions for specific venting configurations.

59SP5A

DOWNFLOW SUBBASE

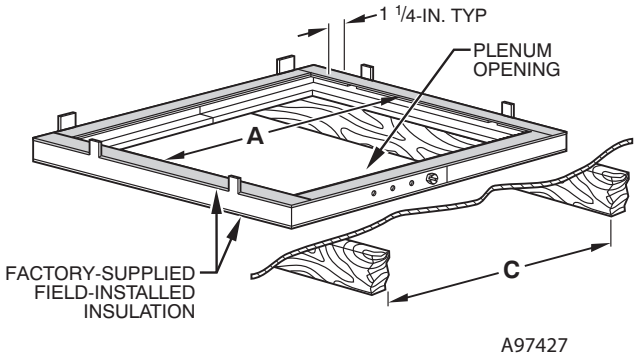

Assembled

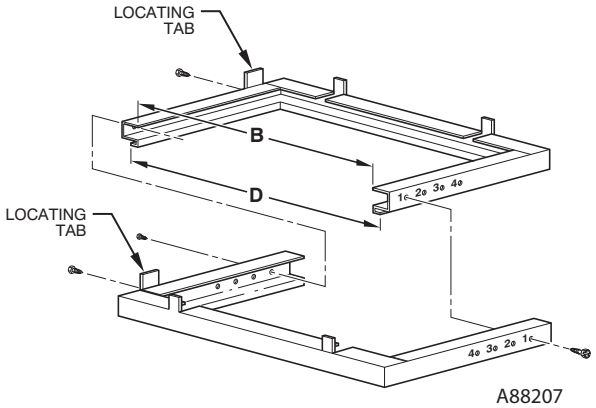

Disassembled

59SP5A

DIMENSIONS (IN. / MM)						
FURNACE CASING WIDTH	FURNACE IN DOWNFLOW APPLICATION	PLENUM OPENING*		FLOOR OPENING		HOLE NO. FOR WIDTH ADJUSTMENT
		A	B	C	D	
14–3/16 (360)	Furnace with or without Cased Coil Assembly or Coil Box	11–3/16 (322)	19 (483)	13–7/16 (341)	20–5/8 (600)	4
17–1/2 (445)	Furnace with or without Cased Coil Assembly or Coil Box	15–1/8 (384)	19 (483)	16–3/4 (426)	20–5/8 (600)	3
21 (533)	Furnace with or without Cased Coil Assembly or Coil Box	18–5/8 (396)	19 (483)	20–1/4 (514)	20–5/8 (600)	2
24–1/2 (622)	Furnace with or without Cased Coil Assembly or Coil Box	22–1/8 (562)	19 (483)	23–3/4 (603)	20–5/8 (600)	1

*The plenum should be constructed 1/4–in. (6 mm) smaller in width and depth than the plenum dimensions shown above.

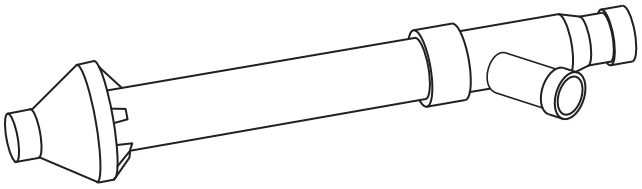

Concentric Vent Kit

A93086

A concentric vent kit allows vent and combustion-air pipes to terminate through a single exit in a roof or side wall. One pipe runs inside the other allowing venting through the inner pipe and combustion air to be drawn in through the outer pipe.

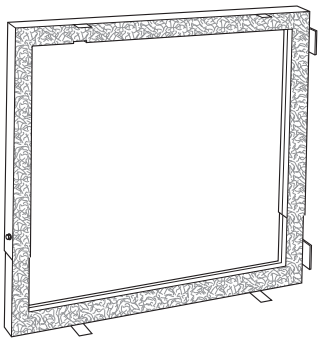

Downflow Subbase

A88202

One base fits all furnace sizes. The base is designed to be installed between the furnace and a combustible floor when no coil box is used or when a coil box other than a Carrier cased coil is used. It is CSA design certified for use with Carrier branded furnaces when installed in downflow applications.

MEDIA FILTER CABINET

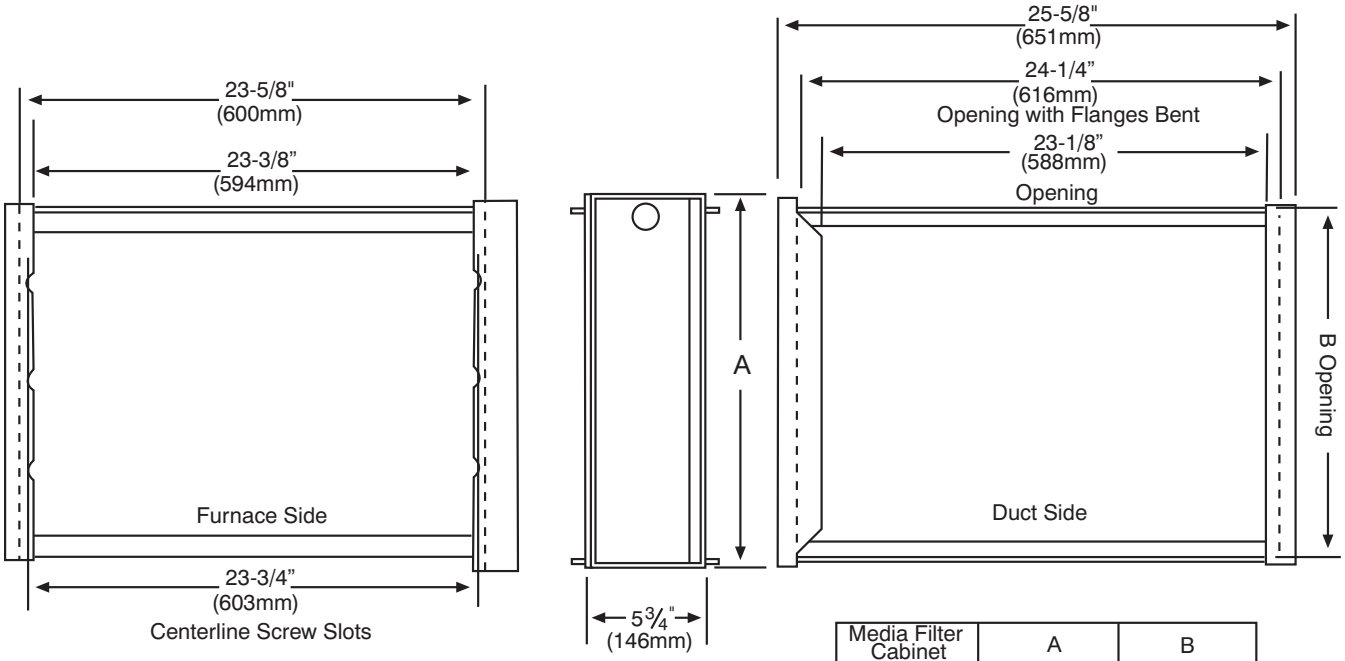

Media Filter Cabinet	A	B
16" (406mm)	17" (432mm)	16" (406mm)
20" (508mm)	21" (533mm)	20" (508mm)
24" (610mm)	25" (635mm)	24" (610mm)

NOTE: Media cabinet is matched to the bottom opening on furnace. May also be used for side return.

A12428

TYPICAL WIRING SCHEMATIC

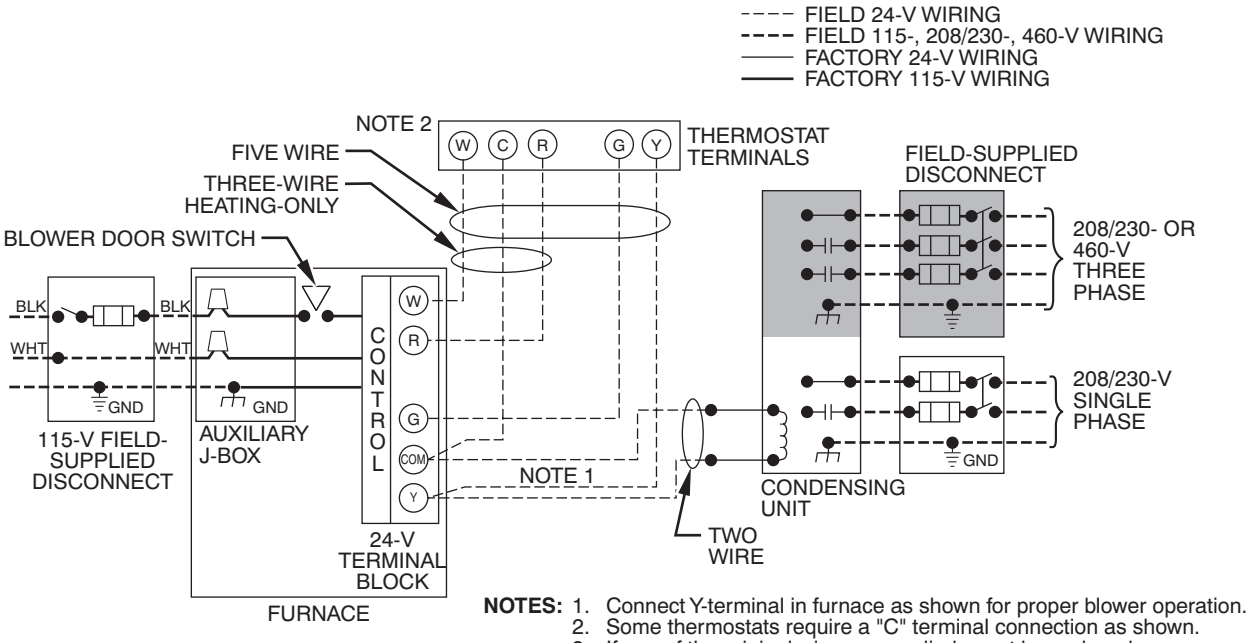

NOTES: 1. Connect Y-terminal in furnace as shown for proper blower operation.
2. Some thermostats require a "C" terminal connection as shown.
3. If any of the original wire, as supplied, must be replaced, use same type or equivalent wire.

A11387

DIMENSIONAL DRAWING

NOTES:
1. Doors may vary by model.
2. Minimum return-air openings at furnace, based on metal duct. If flex duct is used, see flex duct manufacturer's recommendations for equivalent diameters.
   a. For 800 CFM-16-in. (406 mm) round or 14 1/2 x 12-in. (368 x 305 mm) rectangle.
   b. For 1200 CFM-20-in. (508 mm) round or 14 1/2 x 19 1/2-in. (368 x 495 mm) rectangle.
   c. For 1600 CFM-22-in. (559 mm) round or 14 1/2 x 22 1/16-in. (368 x 560mm) rectangle.
   d. Return air above 1800 CFM at 0.5 in. w.c. ESP on 24.5" casing, requires one of the following configurations: 2 sides, 1 side and a bottom or bottom only. See Air Delivery table in this document for specific use to allow for sufficient airflow to the furnace.
3. Vent and Combustion air pipes through blower compartment must use accessory "Vent Kit - Through the Cabinet". See accessory list for current part number.

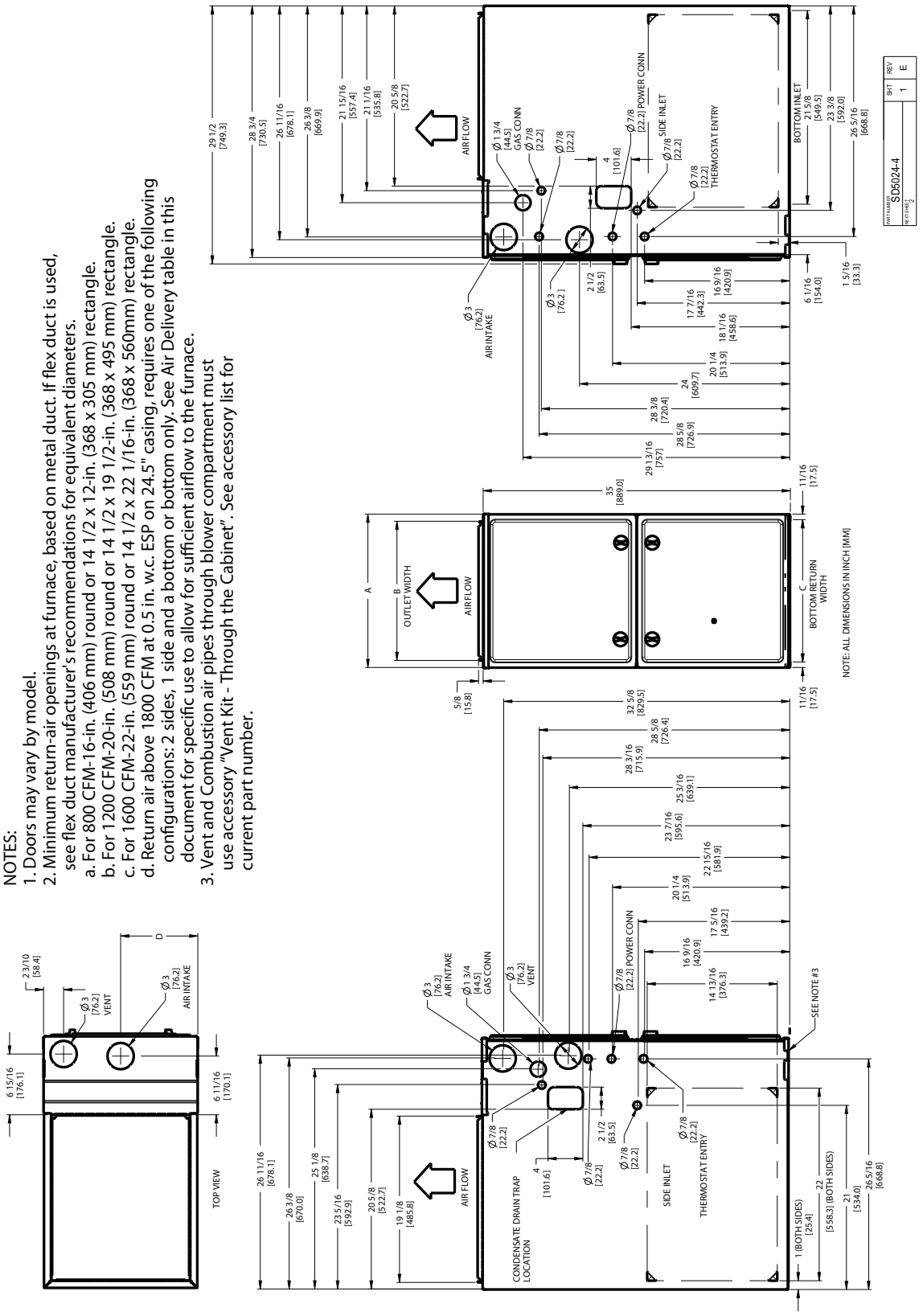

A12267

59SP5 FURNACE SIZE	A CABINET WIDTH	B OUTLET WIDTH	C BOTTOM INLET WIDTH	D AIR INTAKE	SHIP WT. LB (KG)
040 – 10	14 – 3/16 (361)	12 – 1/2 (319)	12 – 9/16 (322)	7 – 1/8 (181)	120.0 (54.4)
060 – 12					130.5 (59.2)
040 – 12	17 – 1/2 (445)	15 – 7/8 (403)	16 (406)	8 – 3/4 (222)	131.0 (59.4)
060 – 14					141.0 (64.0)
080 – 16					145.0 (65.8)
080 – 20	21 (533)	19 – 3/8 (492)	19 – 1/2 (495)	10 – 1/2 (267)	155.5 (70.5)
100 – 20					156.5 (71.0)
120 – 22	24 – 1/2 (622)	22 – 7/8 (581)	23 (584)	12 – 1/4 (311)	189.5 (86.0)

GUIDE SPECIFICATIONS

General

System Description

Furnish a _____ 4-way multipoise gas-fired condensing furnace for use with natural gas or propane (factory-authorized conversion kit required for propane); furnish external media cabinet for use with accessory media filter or standard filter.

Quality Assurance

Unit will be designed, tested and constructed to the current ANSI Z 21.47/CSA 2.3 design standard for gas-fired central furnaces.

Unit will be third party certified by CSA to the current ANSI Z 21.47/CSA 2.3 design standard for gas-fired central furnaces. Unit will carry the CSA Blue Star® and Blue Flame® labels. Unit efficiency testing will be performed per the current DOE test procedure as listed in the Federal Register.

Unit will be certified for capacity and efficiency and listed in the latest AHRI Consumer's Directory of Certified Efficiency Ratings.

Unit will carry the current Federal Trade Commission Energy Guide efficiency label.

Delivery, Storage, and Handling

Unit will be shipped as single package only and is stored and handled per unit manufacturer's recommendations.

Warranty (for inclusion by specifying engineer)

U.S. and Canada only. Warranty certificate available upon request.

Equipment

Blower Wheel and ECM Blower Motor

Galvanized blower wheel shall be centrifugal type, statically and dynamically balanced. Blower motor of ECM type shall be permanently lubricated with sealed ball bearings, of _____hp, and have multiple speeds from 600-1200 RPM operating only when 24-VAC motor inputs are provided. Blower motor shall be direct drive and soft mounted to the blower housing to reduce vibration transmission.

Filters

Furnace shall have reusable-type filters. Filter shall be _____ in. (mm) X _____ in. (mm). An accessory highly efficient Media Filter is available as an option. _____ Media Filter.

Casing

Casing shall be of .030 in. thickness minimum, pre-painted galvanized steel.

Draft Inducer Motor

Draft inducer motor shall be single-speed PSC design.

Primary Heat Exchangers

Primary heat exchangers shall be 3-Pass corrosion-resistant aluminized steel of fold-and-crimp sectional design and applied operating under negative pressure.

Secondary Heat Exchangers

Secondary heat exchangers shall be of a stainless steel flow-through of fin-and-tube design and applied operating under negative pressure.

Controls

Controls shall include a micro-processor-based integrated electronic control board with at least 16 service troubleshooting codes displayed via diagnostic flashing LED light on the control, a self-test feature that checks all major functions of the furnace, and a replaceable automotive-type circuit protection fuse. Multiple operational settings available, including blower speeds for high heat, low cooling, high cooling and continuous fan. Continuous fan speed may be adjusted from the thermostat. Features will also include temporary reduced airflow in the cooling mode for improved dehumidification when a TP-PRH edge®is selected as the thermostat.

Operating Characteristics

Heating capacity shall be _____ Btuh input; _____ Btuh output capacity.

Fuel Gas Efficiency shall be _____AFUE.

Air delivery shall be _____ cfm minimum at 0.50 in. W.C. external static pressure.

Dimensions shall be: depth_____in. (mm); width _____in. (mm); height_____in. (mm) (casing only). Height shall be_____in. (mm) with A/C coil and _____in. (mm) overall with plenum.

Electrical Requirements

Electrical supply shall be 115 volts, 60 Hz, single-phase (nominal). Minimum wire size shall be _____AWG; maximum fuse size of HACR-type designated circuit breaker shall be _____ amps.

Special Features

Refer to section of the product data identifying accessories and descriptions for specific features and available enhancements.

Copyright 2013 Carrier Corp. • 7310 W. Morris St. • Indianapolis, IN 46231

Edition Date: 05/13

Catalog No: 59SP5A−05PD

Manufacturer reserves the right to change, at any time, specifications and designs without notice and without obligations.

Replaces: 59SP5A−04PD

CAPVP, CARVP, CAPVU, CARVU
Evaporator Coil
A Coil – Cased and Uncased
Upflow, Downflow

Carrier
turn to the experts

Product Data

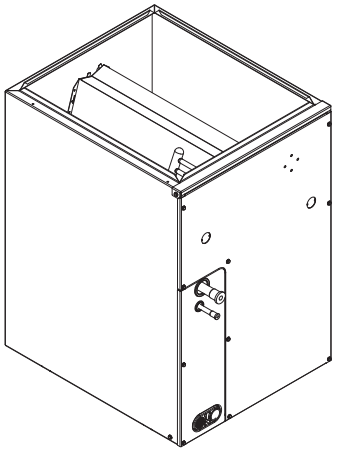

A06001

CAPVP / CARVP

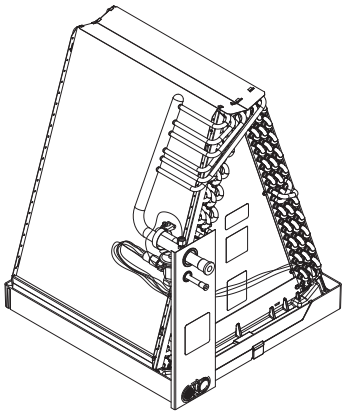

A06002

CAPVU / CARVU

The CAPVP, CARVP, CAPVU, and CARVU evaporator coils incorporate proven standards for reliable system operation and performance throughout the life of a quality Carrier Air Conditioner or Heat Pump system. Evaporator coils manufactured by Carrier and installed as part of a total comfort system provide ARI-rated performance ratings and are additionally listed with UL and c-UL.

The coils are available for use in Puron® refrigerant and R-22 systems. The CAPVP and CARVP are cased A-coils that are housed in a durable, 22-gauge cabinet, pre-painted taupe metallic to match the Carrier furnaces. Not only will the color match, but Carrier A-coils come in sizes to fit "all" Carrier furnaces, even the narrow designs. The fully-insulated cabinet (foil faced with R-2.1 insulation properties) provides for quiet, efficient operation of the evaporator coil. The coils are available in sizes 018 through 060 (1.5-5 tons). The same evaporator coils are available in uncased versions, CAPVU and CARVU.

DESIGN FEATURES

Performance — Designed with performance in mind, these A-coils offer low pressure drops to enhance system performance and airflow characteristics.

Thermostatic Expansion Valves (TXV) — All Carrier coils have refrigerant-specific, factory-installed TXVs.

Durable Condensate Pan —The corrosion-resistant drain pan is designed with a "fiberglass reinforced thermoset polyester" material (FRTP) that offers unsurpassed pan strength. It is engineered with proper slope to help ensure water drainage, reduced pan sweating and improved moisture removal for better home comfort.

Refrigerant Connections — The coils are provided with proven sweat connections for leak-free operation maintaining system reliability. The side mounting tubing to the coil slabs allows for easy cleaning and servicing of the coils, as well as easy access to the TXV.

Burst Pressure — These coils meet or exceed burst pressure of 2100 psi which is at least three to five times the pressure they will see in actual application.

UV Knockouts — The cased coils also come with factory-installed UV knockouts for quick and easy installation of Carrier UV lights.

Serviceability — All the coils come with a "split-delta plate" for easy, quick access to the coil for service and cleaning. Also the coils are removable from the front of the unit without use of any tools (once the door is removed). The units are also designed with a single size screw, the same size as used on all our Carrier furnaces. One tool required for all jobs.

Installation Flexibility — The CAPVU and CARVU evaporator coils are uncased A-coils that provide flexibility for a wide variety of field applications installed in either a factory-manufactured accessory casing, or a field-supplied plenum enclosure. Water management capabilities have been enhanced for downflow applications.

Coil Support — Carrier provides a standard factory pan support for the uncased coil, providing precise, durable support in the plenum for easier installations.

Face Plate — A unique Carrier feature, the face plate comes shipped with the uncased evaporator coil models, provides for a more professional installation and prevents air leaks at the refrigerant line connections.

Tin-Plated Copper Coil Models — Separate lines of tin-plated copper coil models are available, cased and uncased. "T" models are built with special hairpins—tin-plated to resist both general pitting corrosion and excessive indoor corrosion known as Formicary Corrosion. (Formicary Corrosion is an industry phenomenon.)

MODEL NUMBER NOMENCLATURE

1	2	3	4	5	6	7	8	9	10	11	12
C	A	P	V	P	1	8	1	4	A	C	A

Product
C = Coil

Type
A – A Coil

Refrigerant Type
P = Puron® (R–410A) Refrigerant TXV
R = R–22 TXV

Coil Configuration
V = Upflow / Downflow

Cabinet Finish
P = Painted
U = Uncased

Unit Capacity
18 = 1 1/2 Ton
24 = 2 Ton
30 = 2 1/2 Ton
36 = 3 Ton
42 = 3 1/2 Ton
48 = 4 Ton
60 = 5 Ton

Cabinet Width
14 = 14–in. / 356mm
17 = 17–in. / 432mm
21 = 21–in. / 533mm
24 = 24–in. / 610mm

Revision Level
A = 1st

Tubing Design
C = Copper
T = Tin Plated Copper

Variations
A = Basic

Puron™
the environmentally sound refrigerant

c UL US

AHRI CERTIFIED™ www.ahridirectory.org

Use of the AHRI Certified TM Mark indicates a manufacturer's participation in the program For verification of certification for individual products, go to www.ahridirectory.org.

ISO 9001:2000
QMI REGISTERED

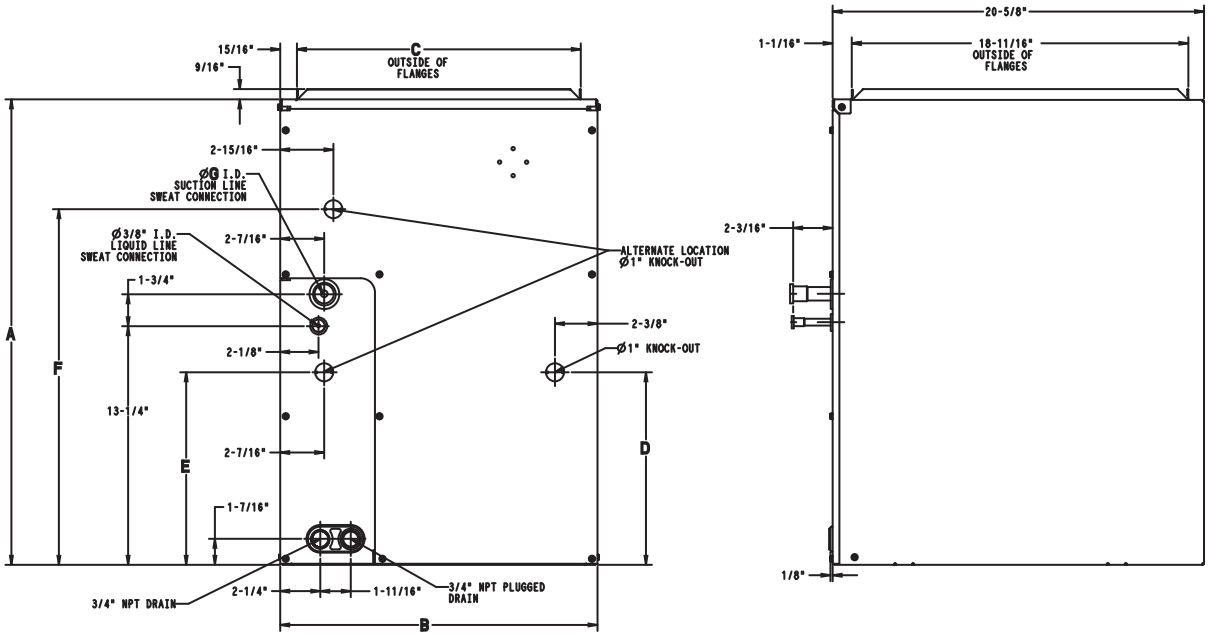

A05392

DIMENSIONS - CA(P,R)VP

CA(P,R)VP	A in. (mm.)	B in. (mm.)	C in. (mm.)	D in. (mm.)	E in. (mm.)	F in. (mm.)	G in. (mm.)	SHIPPING WT. lb. (kg.)	
								Non–Coated Hairpins (C)	Tin–Coated Hairpins (T)
1814(C,T)A	18–5/16 (465)	14–3/16 (360)	12–7/16 (316)	10–11/16 (271)	10–11/16 (271)	–	5/8 (16)	34.5 (16)	37.0 (18)
2414(C,T)A	19–9/16 (497)	14–3/16 (360)	12–7/16 (316)	10–11/16 (271)	10–11/16 (271)	–	5/8 (16)	38.0 (17)	41.0 (19)
2417(C,T)A	19–9/16 (497)	17–1/2 (445)	15–3/4 (400)	10–11/16 (271)	10–11/16 (271)	–	5/8 (16)	40.5 (18)	44.0 (20)
3014(C,T)A	23–11/16 (602)	14–3/16 (360)	12–7/16 (316)	17–3/16 (436)	–	19–3/4 (502)	3/4 (19)	48.0 (22)	50.5 (23)
3017(C,T)A	23–11/16 (602)	17–1/2 (445)	15–3/4 (400)	17–3/16 (436)	–	19–3/4 (502)	3/4 (19)	50.5 (23)	53.5 (24)
3614(C,T)A	25–7/8 (657)	14–3/16 (360)	12–7/16 (316)	17–3/16 (436)	–	19–3/4 (502)	3/4 (19)	51.0 (23)	54.0 (24)
3617(C,T)A	25–7/8 (657)	17–1/2 (445)	15–3/4 (400)	17–3/16 (436)	–	19–3/4 (502)	3/4 (19)	54.5 (25)	57.5 (26)
3621(C,T)A	25–7/8 (657)	21 (533)	19–1/4 (489)	17–3/16 (436)	–	19–3/4 (502)	3/4 (19)	58.0 (26)	61.0 (28)
4221(C,T)A	27–9/16 (700)	21 (533)	19–1/4 (489)	19–3/4 (502)	–	19–3/4 (502)	7/8 (22)	64.5 (29)	67.5 (31)
4224(C,T)A	27–9/16 (700)	24–1/2 (622)	22–3/4 (578)	19–3/4 (502)	–	19–3/4 (502)	7/8 (22)	69.0 (31)	72.0 (33)
4817(C,T)A	33–7/8 (860)	17–1/2 (445)	15–3/4 (400)	19–3/4 (502)	–	19–3/4 (502)	7/8 (22)	78.5 (36)	81.5 (37)
4821(C,T)A	27–9/16 (700)	21 (533)	19–1/4 (489)	19–3/4 (502)	–	19–3/4 (502)	7/8 (22)	71.5 (32)	74.5 (34)
4824(C,T)A	27–9/16 (700)	24–1/2 (622)	22–3/4 (578)	19–3/4 (502)	–	19–3/4 (502)	7/8 (22)	76.5 (35)	79.0 (36)
6021(C,T)A	33–7/8 (860)	21 (533)	19–1/4 (489)	19–3/4 (502)	–	19–3/4 (502)	7/8 (22)	83.0 (38)	86.0 (39)
6024(C,T)A	33–7/8 (860)	24–1/2 (622)	22–3/4 (578)	19–3/4 (502)	–	19–3/4 (502)	7/8 (22)	87.5 (40)	90.5 (41)

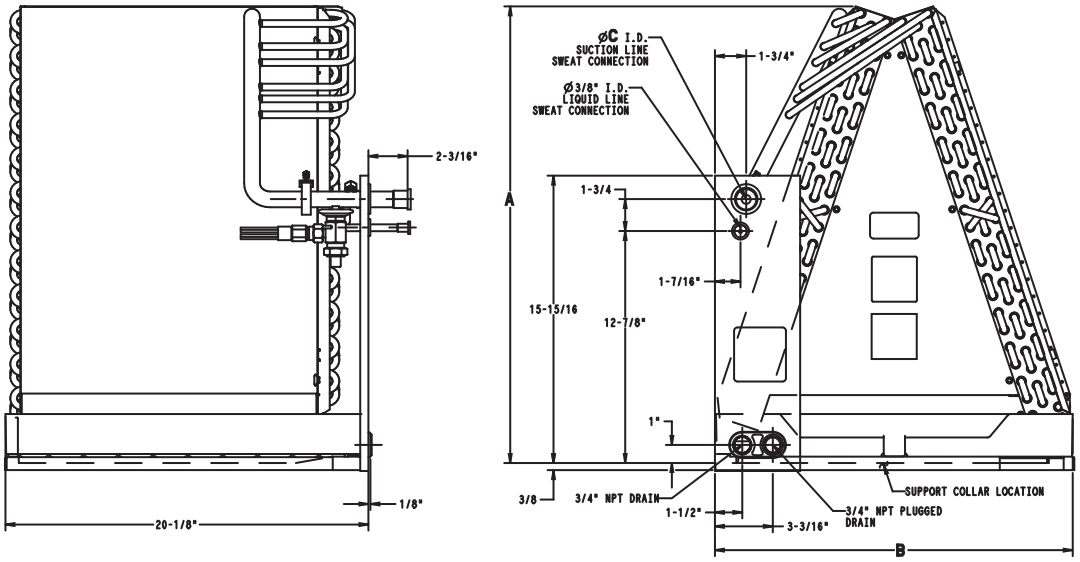

A05393

DIMENSIONS - CA(P,R)VU

UNIT	A in. (mm.)	B in. (mm.)	C in. (mm.)	SHIPPING WT. lb. (kg.)
CA(P,R)VU1814ACA	13 – 5/8 (346)	13 (330)	5/8 (16)	22.0 (10)
CA(P,R)VU2414ACA	17 – 3/4 (451)	13 (330)	5/8 (16)	26.5 (12)
CA(P,R)VU2417ACA	17 – 1/4 (438)	16 – 5/16 (414)	5/8 (16)	29.0 (13)
CA(P,R)VU3014ACA	21 – 7/8 (556)	13 (330)	3/4 (19)	33.0 (15)
CA(P,R)VU3017ACA	21 – 7/16 (545)	16 – 5/16 (414)	3/4 (19)	33.0 (15)
CA(P,R)VU3614ACA	23 – 15/16 (608)	13 (330)	3/4 (19)	32.0 (15)
CA(P,R)VU3617ACA	23 – 9/16 (598)	16 – 5/16 (414)	3/4 (19)	36.5 (17)
CA(P,R)VU3621ACA	23 (584)	19 – 13/16 (503)	3/4 (19)	37.5 (17)
CA(P,R)VU4221ACA	25 – 1/16 (637)	19 – 13/16 (503)	7/8 (22)	40.0 (18)
CA(P,R)VU4224ACA	24 – 1/2 (622)	23 – 5/16 (592)	7/8 (22)	43.5 (20)
CA(P,R)VU4817ACA	29 – 7/8 (759)	16 – 5/16 (414)	7/8 (22)	52.0 (24)
CA(P,R)VU4821ACA	25 – 5/16 (643)	19 – 13/16 (503)	7/8 (22)	49.0 (22)
CA(P,R)VU4824ACA	24 – 13/16 (630)	23 – 5/16 (592)	7/8 (22)	50.5 (23)
CA(P,R)VU6021ACA	31 – 1/2 (800)	19 – 13/16 (503)	7/8 (22)	59.0 (27)
CA(P,R)VU6024ACA	31 – 1/16 (789)	23 – 5/16 (592)	7/8 (22)	57.0 (26)

PERFORMANCE DATA

COOLING CAPACITIES (MBH) - PURON® REFRIGERANT

CAPV UNIT SIZE	INDOOR COIL AIR		SATURATED TEMPERATURE LEAVING EVAPORATOR °F (°C)														
			30 (–1)			35 (2)			40 (4)			45 (7)			50 (10)		
	CFM	EWB	TC	SHC	BF	TC	SHC	BF	TC	SHC	BF	TC	SHC	BF	TC	SHC	BF
1814	450	72 (22)	32.00	15.70	0.00	29.30	14.30	0.00	26.40	12.80	0.00	23.10	11.30	0.00	19.50	9.70	0.01
		67 (19)	26.80	16.10	0.01	24.10	14.60	0.01	21.10	13.10	0.01	17.80	11.50	0.02	14.20	9.90	0.02
		62 (17)	22.10	16.50	0.02	19.30	14.90	0.02	16.40	13.40	0.02	13.20	11.80	0.02	10.30	10.30	0.05
	600	72 (22)	39.20	19.10	0.00	36.00	17.40	0.00	32.30	15.70	0.00	28.30	13.90	0.02	23.80	12.00	0.02
		67 (19)	32.90	19.90	0.03	29.60	18.20	0.03	25.90	16.30	0.03	21.90	14.40	0.03	17.40	12.50	0.03
		62 (17)	27.20	20.60	0.04	23.80	18.80	0.04	20.20	16.90	0.04	16.30	15.00	0.04	13.20	13.20	0.09
	750	72 (22)	45.10	21.90	0.00	41.40	20.10	0.00	37.20	18.20	0.02	32.60	16.10	0.04	27.40	14.00	0.04
		67 (19)	38.00	23.20	0.05	34.20	21.20	0.05	29.90	19.10	0.05	25.20	17.00	0.05	20.00	14.70	0.06
		62 (17)	31.50	24.20	0.06	27.60	22.10	0.06	23.40	20.00	0.06	19.10	17.90	0.06	15.70	15.70	0.13
2414 2417	600	72 (22)	39.40	19.20	0.00	36.30	17.60	0.00	32.80	15.90	0.00	28.90	14.10	0.00	24.50	12.20	0.01
		67 (19)	33.10	20.00	0.01	29.90	18.20	0.01	26.30	16.40	0.01	22.40	14.50	0.02	17.90	12.60	0.02
		62 (17)	27.40	20.50	0.02	24.10	18.70	0.02	20.50	16.90	0.02	16.60	15.00	0.02	13.10	13.10	0.05
	800	72 (22)	47.70	23.20	0.00	44.00	21.40	0.00	39.80	19.40	0.00	35.10	17.30	0.02	29.80	15.10	0.02
		67 (19)	40.30	24.50	0.03	36.40	22.50	0.03	32.10	20.40	0.03	27.30	18.10	0.03	21.80	15.80	0.03
		62 (17)	33.40	25.50	0.04	29.50	23.40	0.04	25.10	21.20	0.04	20.50	19.00	0.04	16.70	16.70	0.09
	1000	72 (22)	54.30	26.40	0.00	50.20	24.40	0.00	45.40	22.30	0.02	40.10	20.00	0.04	34.00	17.50	0.04
		67 (19)	46.00	28.20	0.05	41.70	26.10	0.05	36.80	23.70	0.05	31.20	21.20	0.05	25.00	18.60	0.05
		62 (17)	38.30	29.80	0.05	33.80	27.50	0.06	28.90	25.10	0.06	23.80	22.60	0.06	19.90	19.90	0.14
3014 3017	750	72 (22)	49.10	24.00	0.00	45.00	21.90	0.00	40.50	19.70	0.00	35.50	17.40	0.00	30.00	15.00	0.01
		67 (19)	41.20	24.80	0.01	37.00	22.50	0.02	32.40	20.20	0.02	27.40	17.80	0.02	21.90	15.30	0.02
		62 (17)	34.00	25.40	0.02	29.70	23.00	0.02	25.10	20.60	0.02	20.30	18.30	0.02	16.00	16.00	0.06
	1000	72 (22)	59.90	29.10	0.00	55.00	26.70	0.00	49.50	24.10	0.00	43.30	21.30	0.02	36.50	18.40	0.03
		67 (19)	50.40	30.50	0.03	45.30	27.90	0.04	39.70	25.10	0.04	33.50	22.20	0.04	26.70	19.20	0.04
		62 (17)	41.70	31.60	0.04	36.50	28.80	0.04	30.90	26.00	0.04	25.00	23.10	0.05	20.30	20.30	0.10
	1250	72 (22)	68.80	33.40	0.00	63.20	30.70	0.00	56.80	27.80	0.03	49.70	24.70	0.04	41.90	21.40	0.05
		67 (19)	58.00	35.40	0.06	52.20	32.40	0.06	45.70	29.30	0.06	38.50	26.00	0.06	30.60	22.60	0.07
		62 (17)	48.00	37.00	0.07	42.10	33.90	0.07	35.70	30.70	0.07	29.20	27.50	0.07	24.20	24.20	0.14
3614 3617 3621	900	72 (22)	60.30	29.40	0.00	55.40	26.90	0.00	49.90	24.30	0.00	43.80	21.50	0.01	37.00	18.60	0.02
		67 (19)	50.70	30.60	0.02	45.70	27.90	0.03	40.10	25.10	0.03	33.90	22.20	0.03	27.00	19.20	0.03
		62 (17)	41.90	31.50	0.03	36.70	28.70	0.03	31.10	25.80	0.03	25.10	22.90	0.04	20.00	20.00	0.08
	1200	72 (22)	72.40	35.10	0.00	66.50	32.30	0.00	59.90	29.30	0.02	52.50	26.00	0.04	44.30	22.60	0.05
		67 (19)	61.00	37.10	0.05	55.00	34.00	0.06	48.20	30.70	0.06	40.70	27.30	0.06	32.40	23.70	0.06
		62 (17)	50.50	38.80	0.06	44.30	35.50	0.06	37.60	32.10	0.06	30.60	28.70	0.07	25.20	25.20	0.13
	1500	72 (22)	82.20	39.90	0.00	75.60	36.90	0.02	68.10	33.50	0.05	59.70	29.90	0.07	50.40	26.10	0.08
		67 (19)	69.40	42.70	0.08	62.60	39.30	0.08	55.00	35.70	0.08	46.40	31.80	0.09	37.00	27.80	0.09
		62 (17)	57.70	45.10	0.09	50.70	41.40	0.09	43.10	37.70	0.09	35.50	34.00	0.10	29.80	29.80	0.18
4221 4224	1050	72 (22)	75.00	36.40	0.00	69.30	33.70	0.00	62.60	30.60	0.01	55.10	27.40	0.02	46.90	24.00	0.03
		67 (19)	63.30	38.80	0.03	57.20	35.70	0.03	50.50	32.50	0.03	42.90	29.00	0.04	33.50	25.00	0.04
		62 (17)	52.60	40.80	0.04	46.40	37.60	0.04	39.50	34.10	0.04	32.00	30.40	0.05	26.40	26.40	0.14
	1400	72 (22)	87.10	42.50	0.00	80.60	39.50	0.03	73.00	36.20	0.04	64.20	32.50	0.05	54.40	28.60	0.06
		67 (19)	73.80	46.10	0.06	66.90	42.70	0.06	58.90	39.00	0.07	50.10	35.20	0.07	40.00	30.90	0.07
		62 (17)	61.40	49.30	0.07	54.40	45.70	0.07	46.90	42.10	0.07	39.00	38.10	0.09	33.00	33.00	0.19
	1750	72 (22)	96.50	47.40	0.05	89.50	44.30	0.07	81.30	40.80	0.07	71.70	36.90	0.08	60.50	32.60	0.09
		67 (19)	82.10	52.30	0.09	74.60	48.80	0.09	65.90	44.90	0.09	55.90	40.60	0.09	45.10	36.20	0.10
		62 (17)	68.60	56.80	0.10	61.00	53.10	0.10	52.90	49.10	0.10	44.90	44.90	0.12	38.70	38.70	0.24
4817 4821 4824	1200	72 (22)	83.40	40.60	0.00	76.70	37.20	0.00	69.30	33.60	0.00	60.90	29.80	0.01	51.70	25.80	0.02
		67 (19)	70.10	42.30	0.02	63.20	38.60	0.03	55.60	34.80	0.03	47.20	30.80	0.04	37.80	26.60	0.04
		62 (17)	57.90	43.50	0.04	50.90	39.70	0.04	43.20	35.70	0.04	34.90	31.70	0.04	27.70	27.70	0.08
	1600	72 (22)	100.80	48.90	0.00	92.80	45.10	0.00	83.80	40.90	0.01	73.80	36.40	0.04	62.50	31.70	0.05
		67 (19)	84.90	51.70	0.05	76.70	47.40	0.06	67.50	42.90	0.06	57.30	38.10	0.06	45.90	33.20	0.06
		62 (17)	70.40	53.90	0.06	62.00	49.30	0.06	52.60	44.60	0.07	42.80	39.90	0.07	35.00	35.00	0.13
	2000	72 (22)	114.70	55.70	0.00	105.70	51.60	0.00	95.60	47.00	0.05	84.20	42.00	0.07	71.40	36.70	0.08
		67 (19)	97.00	59.50	0.08	87.70	54.90	0.08	77.30	49.90	0.09	65.60	44.60	0.09	52.50	39.00	0.09
		62 (17)	80.60	62.80	0.09	71.00	57.70	0.09	60.50	52.50	0.09	49.60	47.20	0.10	41.30	41.30	0.18
6021 6024	1600	72 (22)	109.20	53.40	0.00	100.00	48.60	0.00	89.90	43.60	0.00	78.60	38.50	0.00	66.40	33.10	0.02
		67 (19)	91.50	55.10	0.02	82.10	50.00	0.03	71.90	44.80	0.03	60.70	39.40	0.03	48.40	34.00	0.03
		62 (17)	75.40	56.30	0.03	65.90	51.00	0.03	55.60	45.70	0.04	44.80	40.40	0.04	35.30	35.30	0.07
	2000	72 (22)	128.00	62.20	0.00	117.20	56.90	0.00	105.20	51.20	0.00	92.00	45.20	0.02	77.50	39.10	0.04
		67 (19)	107.40	64.90	0.04	96.40	59.10	0.04	84.30	53.00	0.05	71.10	46.80	0.05	56.60	40.50	0.05
		62 (17)	88.60	66.90	0.05	77.50	60.80	0.05	65.30	54.60	0.05	52.70	48.50	0.06	42.40	42.40	0.11
	2400	72 (22)	144.20	70.00	0.00	132.10	64.20	0.00	118.50	57.90	0.01	103.60	51.20	0.04	87.20	44.30	0.06
		67 (19)	121.20	73.60	0.06	108.80	67.20	0.06	95.10	60.40	0.07	80.10	53.50	0.07	63.70	46.40	0.07
		62 (17)	100.10	76.40	0.07	87.50	69.60	0.07	73.80	62.70	0.07	59.80	56.00	0.08	48.90	48.90	0.14

Legend:

CFM – Cubic Ft. per Minute **EWB** – Entering Wet Bulb **LWB** – Leaving Wet Bulb **TC** – Gross Cooling Capacity 1000 Btuh
SHC – Gross Sensible Capacity 1000 Btuh **BF** – Bypass Factor **MBH** – 1000 Btuh

See notes on page 7.

PERFORMANCE DATA (cont.)

COOLING CAPACITIES (MBH) - R-22 REFRIGERANT

CARV UNIT SIZE	INDOOR COIL AIR		SATURATED TEMPERATURE LEAVING EVAPORATOR °F (°C)														
			30 (–1)			35 (2)			40 (4)			45 (7)			50 (10)		
	CFM	EWB	TC	SHC	BF	TC	SHC	BF	TC	SHC	BF	TC	SHC	BF	TC	SHC	BF
1814	450	72 (22)	29.90	14.50	0.00	27.70	13.40	0.00	25.10	12.30	0.00	22.00	10.90	0.00	18.30	9.30	0.01
		67 (19)	25.30	15.40	0.01	22.90	14.20	0.01	20.00	12.80	0.01	16.70	11.20	0.02	12.90	9.60	0.02
		62 (17)	20.90	16.00	0.02	18.30	14.70	0.02	15.40	13.20	0.02	12.40	11.80	0.03	10.20	10.20	0.12
	600	72 (22)	35.20	17.10	0.00	32.60	15.90	0.00	29.60	14.60	0.02	26.30	13.20	0.02	22.00	11.50	0.03
		67 (19)	29.90	18.50	0.03	27.20	17.20	0.03	24.00	15.70	0.03	20.10	14.00	0.03	15.60	12.10	0.03
		62 (17)	25.00	19.80	0.04	22.00	18.30	0.04	18.70	16.60	0.04	15.30	14.90	0.05	12.80	12.80	0.16
	750	72 (22)	39.20	19.20	0.02	36.30	17.90	0.03	33.00	16.50	0.04	29.30	14.90	0.04	25.00	13.30	0.05
		67 (19)	33.30	21.10	0.05	30.40	19.70	0.05	27.00	18.10	0.05	22.80	16.30	0.05	17.80	14.30	0.06
		62 (17)	28.00	22.90	0.05	25.00	21.40	0.06	21.40	19.60	0.06	17.90	17.70	0.09	15.20	15.20	0.21
2414 2417	600	72 (22)	39.50	19.20	0.00	36.70	17.90	0.00	33.60	16.50	0.00	29.90	14.90	0.00	25.60	13.10	0.01
		67 (19)	33.50	20.70	0.01	30.70	19.20	0.01	27.40	17.70	0.01	23.30	15.80	0.01	18.50	13.80	0.02
		62 (17)	28.10	22.00	0.02	25.00	20.40	0.02	21.50	18.60	0.02	17.60	16.70	0.03	14.60	14.60	0.11
	800	72 (22)	45.50	22.30	0.00	42.50	20.90	0.01	38.90	19.40	0.02	34.70	17.70	0.02	30.00	15.80	0.03
		67 (19)	38.90	24.60	0.03	35.60	23.00	0.03	31.90	21.30	0.03	27.50	19.40	0.03	22.10	17.20	0.03
		62 (17)	32.70	26.70	0.03	29.40	25.10	0.03	25.60	23.20	0.04	21.40	21.10	0.05	18.30	18.30	0.16
	1000	72 (22)	49.90	24.70	0.03	46.70	23.40	0.04	42.90	21.80	0.04	38.30	20.00	0.04	33.10	18.00	0.05
		67 (19)	42.80	27.80	0.05	39.30	26.20	0.05	35.20	24.40	0.05	30.50	22.40	0.05	24.90	20.20	0.05
		62 (17)	36.20	30.80	0.05	32.70	29.10	0.06	28.80	27.20	0.06	24.90	24.90	0.09	21.60	21.60	0.21
3014 3017	750	72 (22)	49.30	23.90	0.00	45.70	22.20	0.00	41.50	20.20	0.00	36.60	18.10	0.01	30.60	15.60	0.01
		67 (19)	41.80	25.50	0.02	38.00	23.50	0.02	33.30	21.30	0.02	27.90	18.80	0.02	21.70	16.20	0.02
		62 (17)	34.70	26.70	0.02	30.40	24.50	0.02	25.70	22.10	0.02	20.70	19.70	0.03	17.00	17.00	0.12
	1000	72 (22)	57.80	28.10	0.00	53.60	26.20	0.01	48.70	24.00	0.02	43.20	21.70	0.03	36.70	19.10	0.03
		67 (19)	49.10	30.50	0.04	44.70	28.40	0.04	39.70	26.00	0.04	33.40	23.30	0.04	26.10	20.20	0.04
		62 (17)	41.10	32.60	0.04	36.50	30.30	0.04	31.10	27.70	0.05	25.50	24.90	0.06	21.50	21.50	0.17
	1250	72 (22)	64.10	31.40	0.03	59.60	29.40	0.04	54.20	27.10	0.05	48.10	24.60	0.05	41.20	21.90	0.06
		67 (19)	54.60	34.60	0.06	49.80	32.40	0.06	44.30	29.90	0.06	37.90	27.10	0.06	29.80	23.80	0.06
		62 (17)	45.90	37.70	0.06	41.10	35.30	0.06	35.50	32.60	0.07	29.60	29.60	0.09	25.40	25.40	0.21
3614 3617 3621	900	72 (22)	54.00	26.20	0.00	50.10	24.40	0.00	45.60	22.40	0.01	40.50	20.20	0.02	34.30	17.60	0.02
		67 (19)	45.80	28.20	0.03	41.70	26.20	0.03	37.00	23.90	0.03	31.20	21.30	0.03	24.50	18.50	0.03
		62 (17)	38.30	30.00	0.03	33.90	27.70	0.03	28.80	25.20	0.03	23.50	22.50	0.05	19.50	19.50	0.14
	1200	72 (22)	62.00	30.30	0.02	57.70	28.40	0.03	52.50	26.20	0.04	46.70	23.80	0.05	40.10	21.10	0.05
		67 (19)	52.80	33.30	0.06	48.20	31.10	0.06	42.90	28.70	0.06	36.70	26.00	0.06	29.00	22.80	0.06
		62 (17)	44.30	36.10	0.06	39.70	33.80	0.06	34.20	31.10	0.07	28.50	28.20	0.09	24.30	24.30	0.20
	1500	72 (22)	68.10	33.60	0.06	63.40	31.70	0.07	57.90	29.40	0.07	51.40	26.80	0.08	44.20	24.00	0.08
		67 (19)	58.20	37.60	0.08	53.20	35.40	0.08	47.40	32.80	0.09	40.70	30.00	0.09	32.70	26.70	0.09
		62 (17)	49.00	41.40	0.09	44.10	39.00	0.09	38.60	36.30	0.10	33.10	33.10	0.13	28.50	28.50	0.25
4221 4224	1050	72 (22)	65.80	31.90	0.00	60.70	29.50	0.00	54.90	26.90	0.01	48.30	24.00	0.02	41.10	21.00	0.03
		67 (19)	55.50	34.00	0.03	50.20	31.30	0.03	44.30	28.50	0.03	37.60	25.50	0.04	29.40	22.00	0.04
		62 (17)	46.10	35.80	0.04	40.70	32.90	0.04	34.70	29.90	0.04	28.00	26.70	0.05	23.10	23.10	0.14
	1400	72 (22)	76.30	37.30	0.00	70.60	34.60	0.03	64.00	31.70	0.04	56.30	28.50	0.05	47.70	25.00	0.06
		67 (19)	64.70	40.40	0.06	58.70	37.50	0.06	51.70	34.20	0.07	44.00	30.80	0.07	35.00	27.10	0.07
		62 (17)	53.90	43.20	0.07	47.70	40.10	0.07	41.10	36.90	0.07	34.20	33.40	0.09	28.90	28.90	0.19
	1750	72 (22)	84.60	41.60	0.05	78.50	38.90	0.07	71.30	35.80	0.07	62.80	32.40	0.08	53.10	28.50	0.09
		67 (19)	72.00	45.90	0.09	65.40	42.80	0.09	57.80	39.40	0.09	49.00	35.60	0.09	39.60	31.70	0.10
		62 (17)	60.20	49.80	0.10	53.50	46.50	0.10	46.40	43.00	0.10	39.40	39.40	0.12	34.00	34.00	0.24
4817 4821 4824	1200	72 (22)	69.10	33.50	0.00	64.20	31.30	0.00	58.60	28.70	0.01	52.00	25.90	0.02	44.70	22.90	0.03
		67 (19)	58.60	36.10	0.03	53.50	33.60	0.03	47.60	30.70	0.03	40.90	27.70	0.04	33.00	24.30	0.04
		62 (17)	49.00	38.40	0.04	43.60	35.60	0.04	37.60	32.60	0.04	30.90	29.30	0.05	25.60	25.60	0.13
	1600	72 (22)	79.70	39.00	0.01	74.40	36.60	0.03	68.10	33.90	0.04	60.70	30.80	0.05	52.10	27.40	0.05
		67 (19)	68.00	42.90	0.06	62.30	40.20	0.06	55.50	37.10	0.06	47.70	33.70	0.06	38.90	30.00	0.06
		62 (17)	57.10	46.40	0.06	51.00	43.40	0.06	44.30	40.20	0.07	37.40	36.70	0.08	32.00	32.00	0.18
	2000	72 (22)	87.60	43.30	0.05	81.90	40.90	0.06	75.20	38.10	0.07	67.20	34.90	0.07	57.80	31.20	0.08
		67 (19)	75.00	48.50	0.08	68.80	45.70	0.08	61.60	42.50	0.09	53.00	38.80	0.09	43.30	34.90	0.09
		62 (17)	63.20	53.40	0.09	56.80	50.30	0.09	49.70	46.80	0.10	42.80	42.80	0.13	37.40	37.40	0.24
6021 6024	1600	72 (22)	93.30	45.30	0.00	86.10	41.80	0.00	77.80	38.00	0.00	68.60	33.90	0.01	58.40	29.60	0.02
		67 (19)	78.70	47.90	0.02	71.20	44.00	0.03	62.90	40.00	0.03	53.20	35.60	0.03	41.70	30.60	0.03
		62 (17)	65.30	50.10	0.03	57.70	46.00	0.03	48.80	41.60	0.03	39.30	36.90	0.04	32.00	32.00	0.12
	2000	72 (22)	106.40	51.70	0.00	98.30	47.90	0.00	89.00	43.70	0.02	78.40	39.10	0.03	66.70	34.30	0.04
		67 (19)	90.00	55.40	0.04	81.50	51.20	0.05	71.90	46.60	0.05	61.20	41.80	0.05	48.40	36.40	0.05
		62 (17)	74.80	58.60	0.05	66.10	54.10	0.05	56.70	49.50	0.05	46.20	44.30	0.06	38.40	38.40	0.16
	2400	72 (22)	117.00	57.10	0.00	108.30	53.10	0.03	98.20	48.60	0.04	86.60	43.70	0.05	73.40	38.50	0.06
		67 (19)	99.20	61.90	0.06	90.00	57.40	0.06	79.50	52.50	0.07	67.60	47.30	0.07	54.20	41.70	0.07
		62 (17)	82.70	66.20	0.07	73.20	61.40	0.07	63.00	56.40	0.07	52.30	51.00	0.09	44.10	44.10	0.19

Legend:

CFM – Cubic Ft. per Minute **EWB** – Entering Wet Bulb **LWB** – Leaving Wet Bulb **TC** – Gross Cooling Capacity 1000 Btuh
SHC – Gross Sensible Capacity 1000 Btuh **BF** – Bypass Factor **MBH** – 1000 Btuh

See notes on page 7.

NOTES:

1. Contact manufacturer for cooling capacities at conditions other than shown in table.
2. Formulas:
   Leaving db = entering db - $\frac{\text{sensible heat cap.}}{1.09 \text{ x CFM}}$

   Leaving wb = wb corresponding to enthalpy of air leaving coil (h_{LWB})

   $h_{LWB} = h_{EWB} - \frac{\text{total capacity (Btuh)}}{4.5 \text{ x CFM}}$

   Where h_{EWB} = enthalpy of air entering coil
3. SHC is based on 80°F (27°C) db temperature of air entering the evaporator coil.
   Below 80°F (27°C) db, subtract (Correction Factor x CFM) from SHC.
   Above 80°F (27°C) db, add (Correction Factor x CFM) to SHC.
4. Direct interpolation is permissible. Do not extrapolate.
5. Fan motor heat has not been deducted.
6. All data points are based on 10°F (-12°C) superheat leaving coil and use of thermostatic expansion valve (TXV) device.
7. All units have sweat suction-tube connection and a liquid-tube connection. For 1-1/8-in. system suction tube, 3/4 x 1-1/8-in. suction tube connection adapter is available as accessory.
8. The CAPVP and CAPVU coils can be used in any properly designed system using Puron® refrigerant.
9. The CARVP and CARVU coils can be used in any properly designed system using R-22 refrigerant.
10. Before using maximum cfm shown in table, check coil static pressure drop to ensure system blower can provide necessary static pressure needed for coil and duct systems.
11. Bypass Factor = 0 indicates no psychometric solution. Use bypass factor of next lower EWB for approximation.

BYPASS FACTOR	ENTERING AIR DRY BULB TEMPERATURE °F (°C)					
	79 (26)	78 (26)	77 (25)	76 (24)	75 (24)	Under 75 (24)
	81 (27)	82 (28)	83 (28)	84 (29)	84 (29)	Above 85 (29)
	Correction Factor					
0.10	0.98	1.96	2.94	3.92	4.91	Use formula shown below
0.20	0.87	1.74	2.62	3.49	4.36	
0.30	0.76	1.53	2.29	3.05	3.82	

Interpolation is permissible.
Correction Factor = 1.09 x (1 – BF) x (db – 80)

ACCESSORIES

EMPTY COIL CASING ACCESSORY FOR UNCASED A-COIL

ACCESSORY PART NUMBER	CA(P,R)VU NOMINAL COIL SIZES	DIMENSIONS in. (mm.)		
		H	W	D
KCAKC2212ECC	1814, 2414, 3014, 3614	25–7/8 (657)	14–3/16 (360)	20–5/8 (524)
KCAKC2306ECC	2417, 3017, 3617, 4817	33–7/8 (860)	17–1/2 (445)	20–5/8 (524)
KCAKC2404ECC	3621, 4221, 4821, 6021	33–7/8 (860)	21 (533)	20–5/8 (524)
KCAKC2504ECC	4224, 4824, 6024	33–7/8 (860)	24–1/2 (622)	20–5/8 (524)

COIL STATIC PRESSURE DROP (in. w.c.) PURON® and R-22 REFRIGERANTS

UNIT SIZE	STANDARD CFM																		
	400	500	600	700	800	900	1000	1100	1200	1300	1400	1500	1600	1700	1800	1900	2000	2100	2200
1814	Dry																		
	0.079	0.111	0.145	0.186	0.232														
	Wet																		
	0.083	0.116	0.151	0.196	0.243														
2414	Dry																		
	0.065	0.091	0.120	0.154	0.194	0.237	0.284												
	Wet																		
	0.066	0.094	0.124	0.161	0.203	0.250	0.301												
2417	Dry																		
	0.056	0.076	0.097	0.123	0.151	0.182	0.215												
	Wet																		
	0.060	0.082	0.105	0.132	0.163	0.195	0.231												
3014	Dry																		
	0.054	0.077	0.102	0.133	0.167	0.206	0.248	0.296	0.347										
	Wet																		
	0.059	0.084	0.111	0.142	0.181	0.223	0.269	0.319	0.375										
3017	Dry																		
	0.043	0.059	0.077	0.096	0.119	0.144	0.171	0.201	0.232										
	Wet																		
	0.046	0.063	0.083	0.105	0.130	0.157	0.186	0.219	0.252										
3614	Dry																		
	0.047	0.069	0.093	0.119	0.151	0.187	0.227	0.270	0.317	0.362	0.418								
	Wet																		
	0.053	0.076	0.101	0.129	0.162	0.200	0.241	0.286	0.335	0.388	0.447								
3617	Dry																		
	0.023	0.036	0.052	0.069	0.089	0.110	0.135	0.160	0.189	0.219	0.251								
	Wet																		
	0.042	0.058	0.076	0.095	0.117	0.142	0.169	0.198	0.231	0.265	0.299								
3621	Dry																		
	0.026	0.037	0.050	0.062	0.077	0.092	0.109	0.128	0.148	0.170	0.193								
	Wet																		
	0.029	0.040	0.053	0.065	0.082	0.099	0.119	0.138	0.160	0.185	0.209								
4221	Dry																		
			0.044	0.056	0.068	0.082	0.099	0.119	0.138	0.161	0.183	0.205	0.233						
	Wet																		
			0.058	0.073	0.089	0.106	0.125	0.143	0.165	0.189	0.213	0.239	0.268						
4224	Dry																		
			0.039	0.049	0.060	0.072	0.085	0.099	0.114	0.130	0.146	0.164	0.182						
	Wet																		
			0.054	0.066	0.079	0.092	0.103	0.125	0.142	0.161	0.182	0.202	0.222						
4817	Dry																		
			0.065	0.082	0.105	0.128	0.156	0.185	0.216	0.253	0.290	0.331	0.372	0.417	0.464				
	Wet																		
			0.066	0.084	0.106	0.130	0.159	0.188	0.222	0.256	0.296	0.337	0.379	0.425	0.476				
4821	Dry																		
			0.055	0.072	0.089	0.107	0.128	0.150	0.175	0.199	0.228	0.257	0.288	0.321	0.356				
	Wet																		
			0.058	0.075	0.094	0.115	0.136	0.161	0.188	0.217	0.247	0.279	0.313	0.347	0.386				
4824	Dry																		
			0.044	0.056	0.069	0.084	0.100	0.118	0.137	0.159	0.180	0.198	0.222	0.247	0.275				
	Wet																		
			0.052	0.065	0.080	0.095	0.112	0.131	0.150	0.171	0.193	0.214	0.241	0.270	0.296				
6021	Dry																		
					0.075	0.093	0.112	0.133	0.157	0.181	0.206	0.234	0.264	0.294	0.326	0.360	0.396	0.432	0.478
	Wet																		
					0.077	0.095	0.115	0.137	0.159	0.184	0.209	0.238	0.268	0.300	0.334	0.370	0.407	0.444	0.488
6024	Dry																		
					0.073	0.083	0.095	0.107	0.120	0.136	0.152	0.169	0.184	0.203	0.217	0.238	0.260	0.283	0.307
	Wet																		
					0.076	0.086	0.098	0.110	0.124	0.140	0.157	0.175	0.193	0.215	0.238	0.261	0.286	0.314	0.342

Copyright 2009 Carrier Corp. • 7310 W. Morris St. • Indianapolis, IN 46231 Printed in U.S.A. Edition Date: 09/10 **Catalog No: CAPV–3PD**

Manufacturer reserves the right to change, at any time, specifications and designs without notice and without obligations. Replaces: CAPV–2PD

PROJECT NAME:_____ CATALOG NUMBER:_____

NOTES:_____FIXTURE SCHEDULE:_____

TRADITIONAL SECURITY LIGHT WITH PHOTOCELL

SEC SERIES

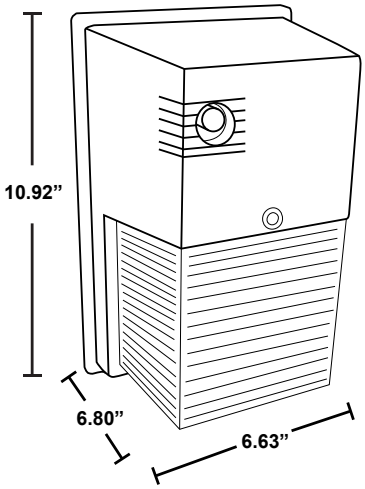

PRODUCT DESCRIPTION:

MaxLite’s ENERGY STAR®-qualified 12-watt MaxLED® Security Light Fixture with dusk-to-dawn PhotoCell provides optimal illumination for outdoor commercial and industrial environments. Available in an architectural bronze finish, the fixture saves up to 81% of the energy consumed by incumbent lamps, and is backed by MaxLite’s five-year limited warranty.

FEATURES:

- Replaces up to 70-watt high-pressure sodium
- Maintenance free and constructed without any hazardous materials
- Mounts to recessed junction box or directly to a wall
- Conduit holes on back and bottom for mounting and wiring flexibility
- 5 Year limited warranty

CONTROLS:

120VAC/208-277VAC Photocontrol: Photocontrol powers the fixture when light levels reach 20 lux or below, and turn it off at 30 lux or higher. The operating temperature of the photocontrols are -30°F - 120°F. Photocell mounted internally.

MODEL SELECTION (Full list of order codes on pg. 2) — Typical order example: SEC12U50BPC27

SEC	12U	50	B	
FAMILY	**NOMINAL WATTAGE, EQUIVALENCY**	**CCT**	**FINISH**	**PHOTOCONTROL**
SEC= Sercurity Light	**12U=** 12W, 70W High Pressure Sodium equivalent	**50=** 5000K	**B=** Bronze	**PC12=** 120V **PC27=** 208-277V

SPECIFICATIONS:

ITEM	SPECIFICATION	SEC12U50BPC12	SEC12U50BPC27
		DETAILS	
GENERAL PERFORMANCE	Lumens Delivered (lm)	1,300	1,225
	Efficacy (lm/W)	107	97
	CCT	5000K	
	Lumen Maintenance (L70, TM-21 @ 25°C)	135,000 hours	
	Color Rendering Index (CRI)	> 80	
ELECTRICAL	Input Voltage (V)	120V, 60Hz	208-277V, 60Hz
	Power Factor	> 0.99	> 0.90
	Input Power (W)	12	
PHYSICAL	Mounting	Can be mounted to recessed outlet box or directly to walls	
	Operating Temperature	-30°F-115°F	
	Lens	Impact- and UV-resistant polycarbonate	
	Housing	Aluminum and polycarbonate	
APPLICATION	Certification	cETLus, LM-79, LM-80, TM-21	
	Environment	Outdoor wet locations	
	Humidity	20% - 85% RH, non condensing	
	Warranty	5 Years	

ORDERING*:

ORDER CODE	MODEL	OPTIONS	VOLTAGE (V)	NOMINAL POWER (WATTS)	CCT	FINISH
76589	SEC12U50BPC12	Photocontrol	120	12	5000K	Bronze
76700	SEC12U50BPC27	Photocontrol	208-277	12	5000K	Bronze

***Please contact your MaxLite representative to order products that don't have order codes listed here.**

CONSTRUCTION:

FIXTURE: The heavy duty die-cast, powder-coat aluminum base, with a one-piece injection molded polycarbonate prismatic lens/housing masked and painted for a seamless cover. The fixture is gasketed and assembled with two screws to produce a sealed fixture that is free of water, dirt and insects.

LENS: Polycarbonate lens with UV stabilizers

LED MODULE: Aluminum components in the LED module act as a heat sink to reduce heat and ensure long life. The module uses directional settings to control the fall of light and the light levels. This fixture is an efficient replacement for metal halide and incandescent fixtures that reduces wattage and extends life.

LED DRIVER: Self contained driver meets UL 1310 UL 48 Class2

FINISH: The bronze base is powder-coat painted, and the housing is masked and painted bronze to match the base.

INSTALLATION: Can mount to recessed J-box or directly to the wall

FSL LED
DECORATIVE FLOOD

Cat.#	
Job	Type

HUBBELL® Outdoor Lighting

Approvals

SPECIFICATIONS

Intended Use:
Ultra compact flood with wide beam NEMA 6 x 6 distribution for lighting applications such as safety/security, facade, area, or signs; operating temperature of -35˚C to 40˚C

Construction:
- Rugged die-cast aluminum housing with dark bronze finish
- High impact UV stabilized acrylic outer lens protects LEDs and allows for cleaning/debris removal
- Vented housing isolates LED module from driver maximizing product life and performance
- Visor and vandal shield available

LED:
- 7 high powered LEDs deliver 2448 lumens
- 5000K CCT, 70 CRI

Optical/Electrical
- Wide flood NEMA 6 x 6 distribution for general purpose flood and facade lighting
- 120-277V operation, 50/60Hz (PC version 120V only) 26w, 1050mA, 94 LPW
- IP66 and RoHS compliant driver

Installation:
- Traditional ½" x 14 NPS threaded adjustable knuckle mounting

Listings:
- Meets DesignLights Consortium (DLC) qualifications
- Lighting Facts
- IP66, Listed to UL1598 for use in wet locations

Warranty:
For more information visit:
http://www.hubbelloutdoor.com/resources/warranty/

PRODUCT IMAGE(S)

NEW

DIMENSIONS

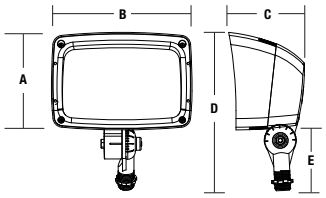

A	B	C	D	E	Weight
5.125"	7.5"	4.0"	8.625"	3.5"	6 lbs.
114 mm	190 mm	102 mm	219 mm	89 mm	2.7 kg

SHIPPING INFORMATION

Catalog Number	G.W(kg)/ CTN	Carton Dimensions		
		Length Inch (cm)	Width Inch (cm)	Height Inch (cm)
FSL-7 (Single carton 1pc.)	2.66	9.45"	7.87"	6.69"
FSL-7 (Master carton 2 pcs.)	5.31	16.54"	10.04"	7.68"

Carton dimensions for shipping purposes only

CERTIFICATIONS/LISTINGS

IP66

ORDERING INFORMATION

Catalog Number	Mount	Max Candle Power	Beam Pattern	Wattage	Drive Current	Voltage	Color Temperature	Lumens	LPW	Weight lbs. (kg)
FSL-7	1/2" thread	1760	Wide	26	1050mA	120-277V	5000K	2448	94	6 (2.7)
FSL-7-PC1	1/2" thread	1760	Wide	26	1050mA	120V	5000K	2448	94	6 (2.7)

ACCESSORIES/REPLACEMENT PARTS - Order Separately

Catalog Number	Description
FSL-SPC	Polycarbonate lens (Replaces existing acrylic fixture lens)
FSL-VISOR-XX[1]	Top/Bottom visor (Tap holes in lens frame for field installation)
93047942AC	Acrylic lens w/ gasket
93047957	25w, Driver, 1040mA
20750110264	Knuckle mount Dark Bronze finish. Contact factory for additional finishes
S-302	Slipfits 1 1/2" or 2" pipe (1.9" OD or 2 3/8" OD) with 1/2" N.P.S.M. hub; Gray
S-302-M51	Slipfits 1 1/2" or 2" pipe (1.9" OD or 2 3/8" OD) with 1/2" N.P.S.M. hub; Bronze
S-302-M52	Slipfits 1 1/2" or 2" pipe (1.9" OD or 2 3/8" OD) with 1/2" N.P.S.M. hub; White
TRN-XX[1]	Trunnion adaptor for 1/2" threaded knuckle mount

1 Specify finish color to match fixture, e.g. DB - Bronze.

FSL-SPC

FSL-VISOR – 3/4 View

Front View

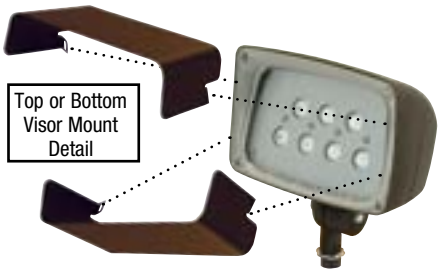

TRN-XX

S-302-XXX

© 2016 HUBBELL OUTDOOR LIGHTING, All Rights Reserved • For more information visit our website: **www.hubbelloutdoor.com** • Printed in USA

PERFORMANCE DATA

# OF LEDS	DRIVE CURRENT (MILLIAMPS	SYSTEM WATTS	DISTRIBUTION TYPE	5K (5000K nominal, 67 CRI) NEMA	LUMENS	LPW	MAX BEAM CANDLEPOWER
7	1050mA	26W	W	6 X 6	2448	94	1760

Lumen values are from photometric tests performed in accordance with IESNA LM-79-08. Data is considered to be representative of the configurations shown. Actual performance may differ as a result of end-user environment, application and inherent performance tolerances of the electrical components.

LUMINAIRE AMBIENT TEMPERATURE FACTOR (LATF)

AMBIENT TEMPERATURE		LUMEN MULTIPLIER
0°C	32°F	1.02
10°C	50°F	1.01
20°C	68°F	1.00
25°C	77°F	1.00
30°C	86°F	1.00
40°C	104°F	0.99
50°C	122°F	0.98

Use these factors to determine relative lumen output for average ambient temperatures from 0-50°C (32-122°F).

PROJECTED LUMEN MAINTENANCE

AMBIENT TEMP.	OPERATING HOURS 0	25,000	50,000	[1]TM-21-11 60,000	100,000	Calculated L70 (HOURS)
40°C / 104°F	0.99	0.91	0.85	0.84	0.76	>137,000

ELECTRICAL DATA

# OF LEDS	NUMBER OF DRIVERS	DRIVE CURRENT (mA)	INPUT VOLTAGE (V)	CURRENT (Amps)	SYSTEM POWER (W)
7	1	1050mA	120	0.23	26
			277	0.11	26

PHOTOMETRICS For additional photometric information and IES downloads, visit our web site at www.hubbelloutdoor.com

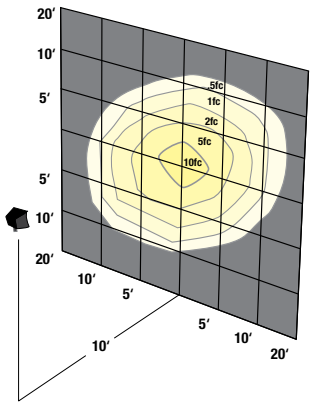

© 2016 HUBBELL OUTDOOR LIGHTING, All Rights Reserved • For more information visit our website: **www.hubbelloutdoor.com** • Printed in USA

WPC Series

Full Cutoff LED Wall Pack

Features

Long life (50k Hrs+)

moisture resistant enclosure

Utilizes Osram PrevaLED® boards and Optotronic® drivers

Wide range of constant current outputs available

Available in 30W, 50W and 85W Configurations

Technical Data

Housing: Die cast aluminum housing & hinged front frame, ½″ coin plugs with O-rings for conduit & photocell, textured architectural bronze powdercoat finish over a chromate conversion coating.

LEDs: OSRAM's PrevaLED linear lignt engine system combines a 2-inch diameter module using high-efficacy LEDs and on-board active intelligent control.

WPC 100

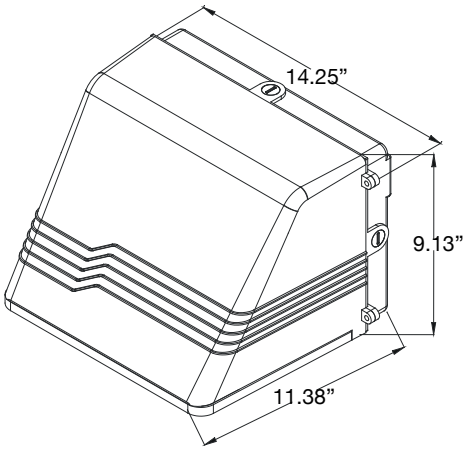

WPC 200

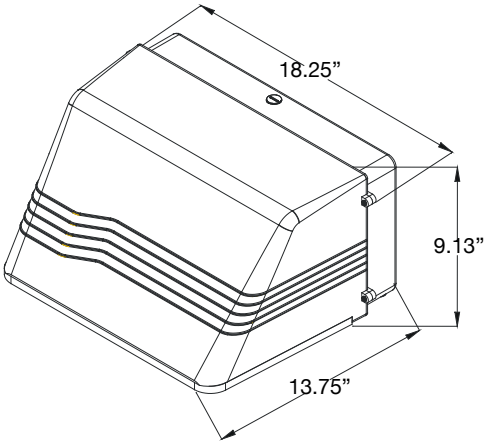

Light Engine	Lumens	Replaces
P2H	2848	70-100W
P3H	5001	100-175W
P6H	8504	175-250W

Ordering Information

Part Number = Style + Size +Light Engine + Color Temp
Ex. (F-WP100-P2H-40 = Wall pack with 3 modules 40K)

Style	Size	Light Engine	Color Temp.
F - Fixture	**WPC100**	**P2H - 2 Modules - 30W**	**40K**
	WPC200	**P3H - 3 Modules - 50W**	**50K**
		P6H - 6 Modules - 85W	

WP Series

LED WallPack

Features

Long life (50k Hrs+)

moisture resistant enclosure

Utilizes Osram PrevaLED® boards and Optotronic® drivers

Wide range of constant current outputs available

Available in 30W, 50W and 85W Configurations

Technical Data

Housing: Die cast aluminum housing & hinged front frame, ½″ coin plugs with O-rings for conduit & photocell, textured architectural bronze powdercoat finish over a chromate conversion coating.

Light Engine	Lumens	Replaces
P2H	2848	70-100W
P3H	5001	100-175W
P6H	8504	175-250W

LEDs: OSRAM's PrevaLED linear light engine system combines a 2-inch diameter module using high-efficacy LEDs and on-board active intelligent control.

Dimensions

WP100

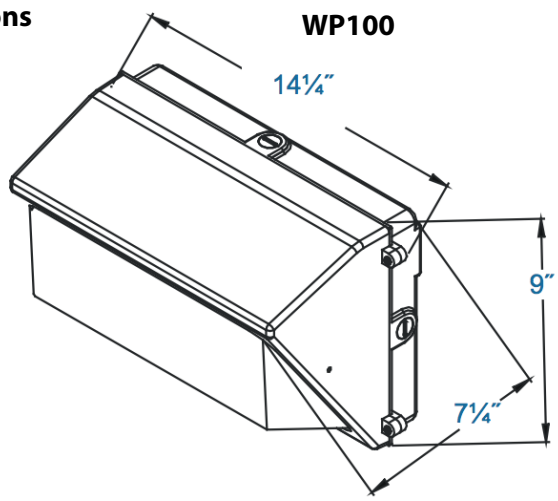

WP200

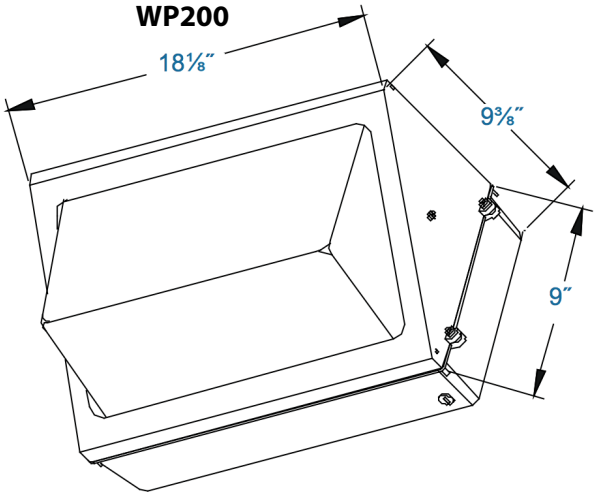

Ordering Information

Part Number = Style + Size + Light Engine + Color Temp
Ex. (F-WP100-P2H-40 = Wall pack with 3 modules 40K)

Style	Size	Light Engine	Color Temp.
F - Fixture	***WP100**	**P2H - 2 Modules - 30W**	**40K**
	WP200	**P3H - 3 Modules - 50W**	**50K**
		P6H - 6 Modules - 85W	

*WP100 only available in P2H

DUSK-TO-DAWN DDL

MULTIPURPOSE LED LUMINAIRE

Cat.#

Job

Type

HUBBELL® Outdoor Lighting

Approvals

SPECIFICATIONS

Intended Use:
Multi-purpose dusk-to-dawn LED lumianire provides general purpose area/security, roadway and landscape lighting. For operation in -35˚C - 40˚C ambient temperatures.

Construction:
- Rugged die-cast aluminum housing with both 2-3/8" & 1-5/8" OD mast arm mount capability as well as direct wall/ surface mounting; Textured gray powder paint provides corrosion resistance and clean finish

LED:
- 9 high power LEDs deliver 3437 lumens with symmetrical lens and 3246 with asymmetrical lens
- 5100 CCT, 67 CRI

Optical/Electrical
- Symmetric LED lens installed standard
- Field rotatable asymmetric LED lens included for pathway/ roadway applications
- 120V operation with integral surge protection, 50/60Hz
- 120V twist-lock style photocontrol included
- Refractor provides enhanced security lighting and LED brightness control
- Zero uplight design for environmentally friendly installations

Installation:
Versatile mounting options include:
- Three 1/4" slots for wall/surface
- 24" (18" projection) aluminum mast arm included
- Mast arm clamp adjusts to 2-3/8"or 1-5/8" OD arms

Listings:
- Meets DesignLights Consortium (DLC) qualifications
- Listed to UL1598 for use in wet locations
- Driver IP66 and RoHS compliant
- EPA = 0.5

Warranty:
For more information visit:
http://www.hubbelloutdoor.com/resources/warranty/

PRODUCT IMAGE(S)

NEW

DIMENSIONS

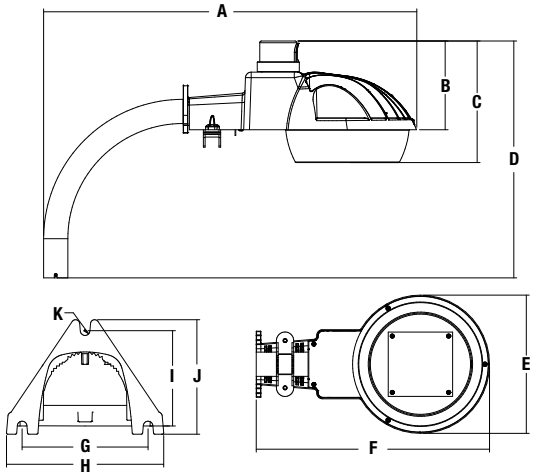

A	B	C	D	E	F
29.72"	6"	8.25"	16.19"	9.45"	16"
754 mm	152 mm	209 mm	411 mm	240 mm	406 mm

G	H	I	J	K
3.62"	4.52"	2.74"	3.29"	.138"
92 mm	115 mm	69 mm	84 mm	3.5 mm

SHIPPING INFORMATION

Catalog Number	G.W(kg)/ CTN	Carton Dimensions		
		Length Inch (cm)	Width Inch (cm)	Height Inch (cm)
DDL-9L-1 (Single carton 1pc.)	4.57	17.83"	14.49"	7.68"
DDL-9L-1 (Master carton 2 pcs.)	10.00	18.23"	14.88"	16.34"

Carton dimensions for shipping purposes only – Pallet Quantity 40

CERTIFICATIONS/LISTINGS

ORDERING INFORMATION

Catalog Number	Construction	Mount	Wattage	Drive Current	Voltage	Color Temperature	Lumens	LPW	Weight lbs. (kg)
DDL-9L-1	Die-cast aluminum	Arm/Wall/Surface	40	1280mA	120V	5100K	3437	86	6.8 (3.08)

ACCESSORIES/REPLACEMENT PARTS - Order Separately

Catalog Number	Description
DDL-DRIVER-120V	Driver for DDL9L - 120V
DDL-LENS2	LED Asymmetric lens for DDL-9L
DDL-LENS5	LED Symmetric lens for DDL-9L
DDL-REFR	Refractor for DDL-9L

Due to our continued efforts to improve our products, product specifications are subject to change without notice.

© 2014 HUBBELL OUTDOOR LIGHTING, All Rights Reserved • For more information visit our website: **www.hubbelloutdoor.com** • Printed in USA

PERFORMANCE DATA

# OF LEDS	DRIVE CURRENT (MILLIAMPS	SYSTEM WATTS	DISTRIBUTION TYPE	5K (5100K nominal, 67 CRI) LUMENS	LPW	B	U	G
9	1280mA	40W	Symmetric	3437	86	1	0	1
9	1280mA	40W	Asymmetric	3246	81	1	0	1

Lumen values are from photometric tests performed in accordance with IESNA LM-79-08. Data is considered to be representative of the configurations shown. Actual performance may differ as a result of end-user environment, application and inherent performance tolerances of the electrical components.

LUMINAIRE AMBIENT TEMPERATURE FACTOR (LATF)

AMBIENT TEMPERATURE		LUMEN MULTIPLIER
0°C	32°F	1.02
10°C	50°F	1.01
20°C	68°F	1.00
25°C	77°F	1.00
30°C	86°F	1.00
40°C	104°F	0.99
50°C	122°F	0.98

Use these factors to determine relative lumen output for average ambient temperatures from 0-50°C (32-122°F).

PROJECTED LUMEN MAINTENANCE

AMBIENT TEMP.	OPERATING HOURS 0	25,000	50,000	[1]TM-21-11 60,000	100,000	Calculated L70 (HOURS)
40°C / 104°F	0.99	0.94	0.91	0.89	0.84	>216,000

ELECTRICAL DATA

# OF LEDS	NUMBER OF DRIVERS	DRIVE CURRENT (mA)	INPUT VOLTAGE (V)	CURRENT (Amps)	SYSTEM POWER (W)
9	1	STD. (1280mA)	120	0.35	40

PHOTOMETRICS For additional photometric information and IES downloads, visit our web site at www.hubbelloutdoor.com

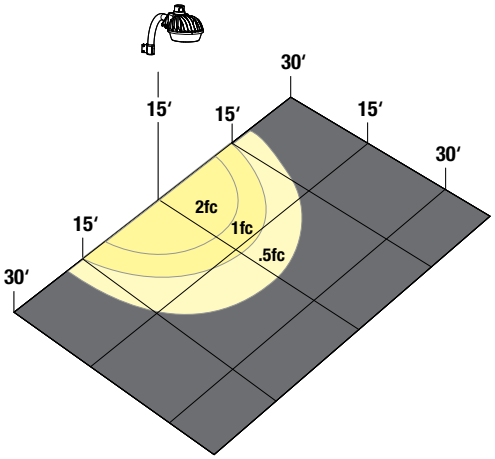

Symmetric LED lens

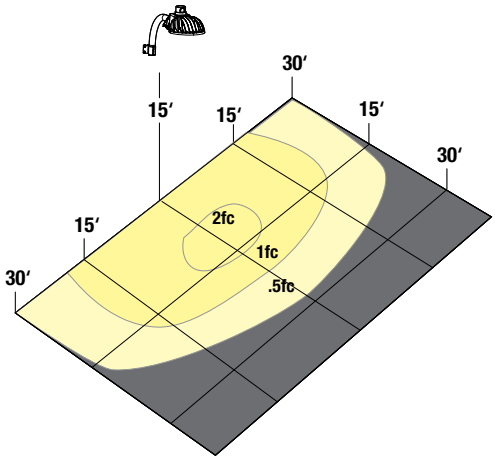

Asymmetric LED lens

MOUNTING OPTIONS

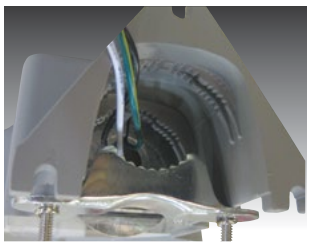

Dual rows of serrated teeth ensure positive grip on mast arm, preventing loosening due to continuous vibration

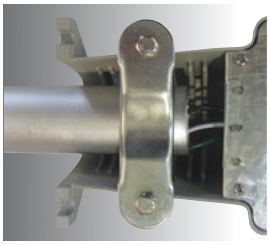

Bottom view of stainless steel mast arm clamp

Stainless steel mast arm clamp is reversible accommodating either 2-3/8" or 1-5/8" OD arms

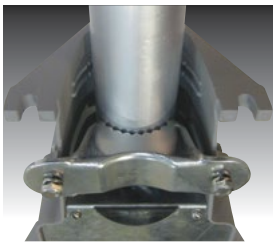

Mast arm clamp easily adjusts to 1-5/8" OD arms with two 3/8" bolts

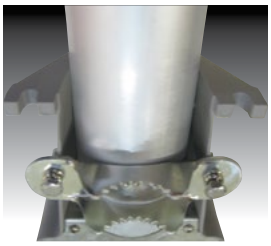

Reversible clamp easily adjusts to 2-3/8" OD arms with two 3/8" bolts

Molded orientation marker for rotatable LED asymmetric lens, align lens with "house" icon for desired light direction

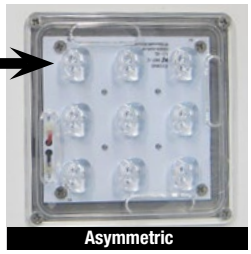

Asymmetric

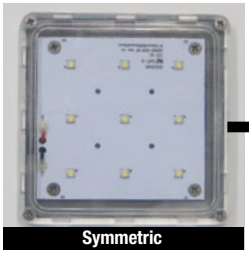

Symmetric

Field rotatable/exchangeable LED lenses included

HUBBELL Outdoor Lighting

Hubbell Outdoor Lighting • 701 Millennium Boulevard • Greenville, SC 29607 • Phone: 864-678-1000

Due to our continued efforts to improve our products, product specifications are subject to change without notice.

© 2014 HUBBELL OUTDOOR LIGHTING, All Rights Reserved • For more information visit our website: **www.hubbelloutdoor.com** • Printed in USA

PGS LED

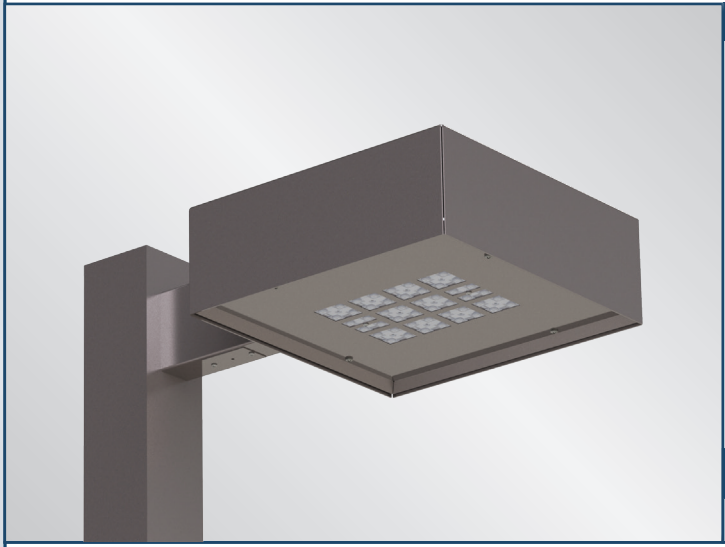

Dimensional Drawings

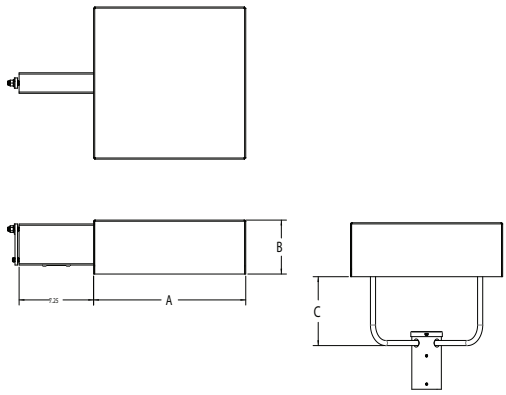

Fixture	A	B	C	Max. LEDs	Lbs
PGS	15”	5.25”	7”	48	15

The new PGS LED luminaire from Visionaire combines contemporary design with new LED technology; while maintaining a traditional fixture image. The LEDs Performance and Life are maximized by the unique integral aluminum heat sink. It is an ideal replacement for the high-maintenance fluorescent or HID fixtures of yesterday.

The LED housing is formed aluminum with internal heat sink for maximum heat dissipation; with either 16, 32 or 48 LEDs. The formed aluminum driver compartment allows the driver to operate cooler for long life. Available with a Low Profile Mount, and a Ceiling Mount for surface conduit mounting, Pendant Mounting, Bolt-On Arm or Spider Mount.

Six optical distribution patterns are available. Choose between 3000, 4000 or 5000 Kelvin temperature of the LED’s.

A durable polyester powder coat finish is guaranteed for five years; and is available in standard or custom colors.

The PGS LED series is an exceptional choice for paths and roadways, pedestrian walkways, shopping centers, etc..

Model	Optics	Source	Milliamps	Kelvin	Voltage	Mounting	Finish	Options
PGS-1	**Type I (T1)** **Type II (T2)** **Type III (T3)** **Type IV (T4)** **Type V (T5)** **Type V-W (T5W)**	# of LEDs 16 **(16LC)** 32 **(32LC)** 48 **(48LC)**	mA 350 **(3)** 530 **(5)** 700 **(7)**	3000K *Warm white **(3K)** 4000K *Neutral white **(4K)** 5000K *Cool white **(5K)**	120-277 *Universal voltage **(UNV)** 480 **(5)** 347 **(8)** *347V & 480 V not available in 16LC *347V & 480 V not available in 32LC 350 mA	Low Profile Mount Ceiling Mount *No Conduit Feed **(LPM)** Ceiling Mount **(CM)** Pendant Mount **12” (PM12)** **24” (PM24)** **36” (PM36)** Spider Mount Fits 2 3/8” O.D. **(SM)** Bolt On Arm **(BOA)** Wall Mount *Cast wall plate (BAWP) to be ordered separately **(WM)**	Bronze **(BZ)** Black **(BK)** White **(WH)** Graphite **(GP)** Grey **(GY)** Silver Metallic **(SL)** Custom Color **(CC)**	Photocell & Receptacle *Specify Voltage **(PCR120) (PCR208) (PCR240) (PCR277)** *Specify BOA or Spider Mount Photo & Receptacle with shorting cap **(PER)** *Specify BOA or Spider Mount Motion Sensor/Control Watt Stopper FSP-211 22’ Distance @ 8’ CLG HT Must specify Dimming Driver. *120V-277V Only **(WSC)** 0-10v Dimming Driver No Controls **(DIM)** 10kV Surge Protector **(10KV)** Emergency Battery Pack *120V-277V Only **(EBPL)** Round Pole Plate Adapter **(RPP)** Cast Wall Plate **(BAWP)** Universal Pole Mount Adapter **(UPMA)** *BOA only

PGS Drill Diagram

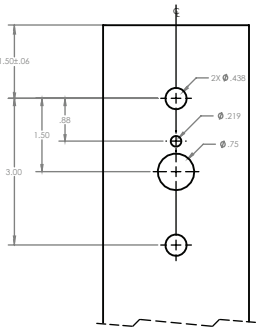

Round Pole Plate Adaptors (RPP) to be ordered separately

For more detailed information on mounting, wiring or installation instructions, please consult factory. If poles are not ordered with fixtures, please specify mounting requirements. This document contains proprietary information of Visionaire Lighting LLC. Any use of this information requires the written approval of Visionaire Lighting, LLC. In keeping with our TQM policy of continuous improvement, Visionaire reserves the right to change any specifications contained herein without prior notice.

VISIONAIRE LIGHTING
Performance In A Whole New Light®

Housing

Heavy duty formed aluminum housing with internal heat sink for maximum heat dissipation. Silicone gasket is used for weather tight operation.

Mounting

A Pre-Attached Aluminum, Bolt-on Arm (BOA), with bottom access, is supplied along with an in-pole nut plate; for fast and easy attachment to the pole.

A Low Profile, hinged, ceiling mount bracket, can be secured directly to a recessed junction box, or to the ceiling. A Ceiling Mount bracket with 3/4" knockouts is available for surface conduit mounting.

The ceiling hangar bracket on both versions allows the fixture to be suspended while making the wiring connections. The housing bracket then attaches to the ceiling bracket via a tamper-proof screw.

3/8" NPT stem and canopy supplied for pendant mount applications.

Thermal Management

The **PGS** series provides excellent thermal management by mounting the LEDs to the substantial heat sink within the housing. This enables the Luminaire to withstand higher ambient temperatures and driver currents without degrading LED life.

Optical System

· The hightest lumen output LEDs are utilized. High-performance acrylic optics feature industry leading Type I, II, III, IV, V and V-W optical distributions. Acrylic optics are impact-resistant and rated to 94 percent translucence.
· L70 life of our LEDs is rated over 100,000 hours (for 350 mA), The optical system qualifies as IES full cutoff to restrict light trespass, glare and light pollution for neighborhood-friendly lighting.
· CRI values are 70.

Quali-Guard Finish

The finish is a Quali-Guard textured, chemically pretreated through a multiple-stage washer, electrostatically applied, thermoset polyester powder coat finish, with a minimum of 3-5 millimeter thickness. Finish is oven-baked at 400º F to promote maximum adherence and finish hardness. All finishes are available in standard and custom colors.

Finish is guaranteed for five (5) years.

Electrical Assembly

The **PGS** LED series is supplied with a choice of 350, 530 or 700mA high-performance LED drivers that accept 120v thru 480v, 50 Hz to 60 Hz, input. Power factor of 90%. Rated for -40°C operations.

Warranty

Five (5) year Limited Warranty on entire system, including finish. For full warranty information, please visit visionairelighting.com.

Options

- 0-10 Volt Dimming Driver
- Motion Sensor/Control Watt Stopper FSP-211
- 10 kV surge protector
- Emergency Battery Pack
- Photocell & Receptacle
- Photo & Receptacle
- Cast Wall Plate
- Universal Pole Mount Adapter
- Round Pole Plate Adapter

Listings

- PGS is UL listed, suitable for wet locations.
- DLC Listed
- IP65 Rated
- Powder Coated Tough

DesignLights Consortium (DLC) qualified Product. Some configurations of this product family may not be DesignLights Consortium (DLC) listed, please refer to the DLC qualified products list to confirm listed configurations. http://www.designlights.org/

Ceiling Mount Detail

Spider Mount Detail

PGS 5000 K Lumen Data

# LEDs	mA	Type 1	Type 2	Type 3	Type 4	Type 5	Type 5 W	Watts
16	350	2,278	2,331	2,401	2,193	2,514	2,361	18
	530	3,273	3,207	3,304	3,018	3,459	3,249	26
	700	4,299	4,213	4,341	3,964	4,544	4,269	37
32	350	4,786	4,691	4,833	4,413	5,059	4,752	35
	530	6,631	6,499	6,696	6,115	7,010	6,584	52
	700	8,318	8,151	8,398	7,670	8,792	8,259	71
48	350	7,188	7,044	7,258	6,628	7,598	7,137	56
	530	9,994	9,794	10,091	9,216	10,565	9,923	80
	700	11,242	11,017	11,352	10,367	11,884	11,163	102

Visit www.VisionaireLighting.com for up-to-the-minute chart information, including types not listed here.
* For 4000K multiply values by 0.95 * For 3000K multiply values by 0.90

19645 Rancho Way Rancho Dominguez, CA 90220
Tel: (310) 512-6480 Fax: (310) 512-6486
www.visionairelighting.com

PL H 10.5W BYP TITANIUM LED SERIES

GREENCREATIVE

PL EDGE SERIES

PRO

10.5W REPLACES

26W CFL

60% Energy Savings

- HYBrid installation - DIRect or BYPass
- Compatible with magnetic ballasts - DIRect installation
- Built-in universal voltage driver - Bypass installation
- Compatible with G24d, GX24d, G24q & GX24q bases
- Exceptional efficacy 89 LPW
- Lasts 4 times longer than CFL

50,000 H | MAGNETIC BALLAST COMPATIBLE | 120-277V UNIVERSAL | 5 YR WARRANTY | 80 CRI (Ra) | SEMI DIRECTIONAL

CLASSIFIED UL US | FC | lighting facts LED Product Partner | LM 79 | LM 80 | TM 21 | IES

PL PRODUCT FEATURES

BYPass Installation - Electronic Ballasts

This PL H lamp is not compatible with electronic ballasts and requires bypassing the ballast during installation. The lamp runs directly off line voltage to eliminate compatibility problems, incidental power loss, lifetime issues, and maintenance costs associated with ballasts.

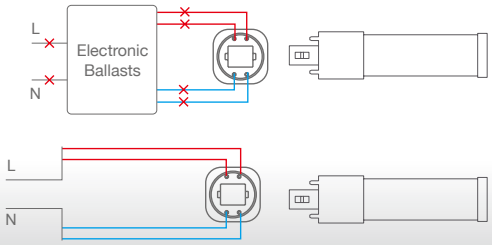

HYBrid Installation - DIRect or BYPass - Magnetic Ballasts

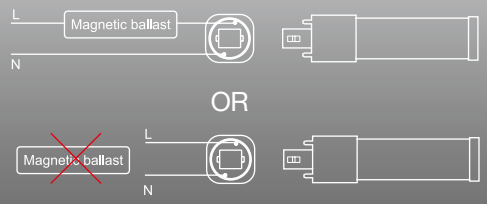

When used with a magnetic ballast, the PL H can function as a plug & play lamp and operate with the existing ballast. If the ballast is not compatible, it can be bypassed and the lamp can run directly off line voltage.

PL H 10.5W BYP TITANIUM LED SERIES

GREENCREATIVE

APPLICATIONS

Retail

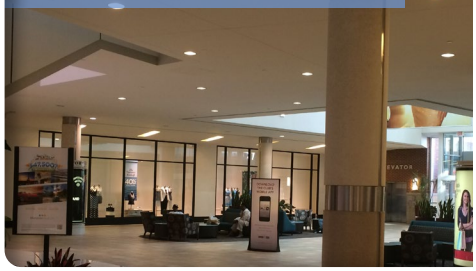

Hospitality

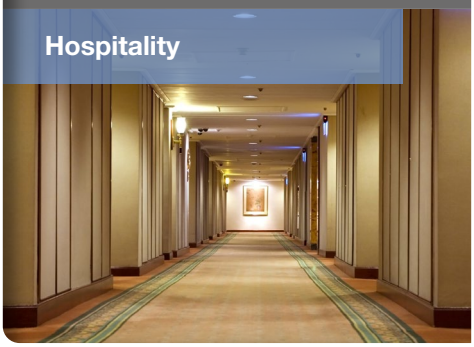

Office

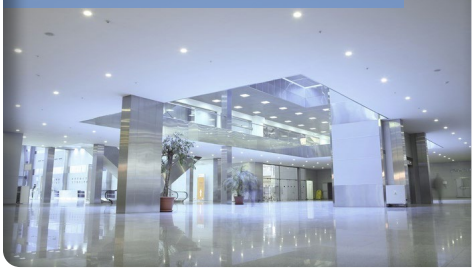

Ref.#: DS155-PLH-10.5W-BYP

Base:	G24d, GX24d, G24q & GX24q (2/4-pin CFL)
Voltage:	Magnetic ballast compatible 120-277V
Dimmable:	No
PF:	0.9
Lifetime:	50,000 hrs
Weight:	0.18lb / 82g

SPECIFICATIONS*

Model	Product	Power (W)	CCT	CRI (typ.)	Lumens	LPW	Beam Angle
10.5PLH/827/BYP	57906	10.5	Soft White 2700K	80	870	83	110°
10.5PLH/830/BYP	57907	10.5	Warm White 3000K	80	920	88	110°
10.5PLH/835/BYP	57908	10.5	Neutral White 3500K	80	920	88	110°
10.5PLH/840/BYP	57909	10.5	Cool White 4000K	80	935	89	110°

* Specification data is preliminary and may be subject to change
** Suitable for damp locations. Not for use where directly exposed to weather or water
*** Not intended for use in enclosed fixtures
**** Full installation guide and more details available on website

PL V 11.5W BYP TITANIUM LED SERIES

GREENCREATIVE

PL EDGE SERIES

PRO

11.5W REPLACES

26W CFL

60% Energy Savings

- **HYBrid installation - DIRect or BYPass**
- **Compatible with magnetic ballasts - DIRect installation**
- **Built-in universal voltage driver - Bypass installation**
- **Compatible with G24d, GX24d, G24q & GX24q bases**
- **Innovative round design**
- **Exceptional efficacy 89 LPW**

50,000 H

MAGNETIC BALLAST COMPATIBLE

120-277V UNIVERSAL

5 YR WARRANTY

80 CRI (Ra)

SEMI DIRECTIONAL

CLASSIFIED UL US

FC

lighting facts LED Product Partner

LM 79 LM 80 TM 21 IES

PL PRODUCT FEATURES

BYPass Installation - Electronic Ballasts

This PL V lamp is not compatible with electronic ballasts and requires bypassing the ballast during installation. The lamp runs directly off line voltage to eliminate compatibility problems, incidental power loss, lifetime issues, and maintenance costs associated with ballasts.

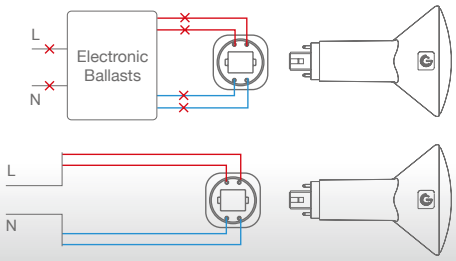

HYBrid Installation - DIRect or BYPass - Magnetic Ballasts

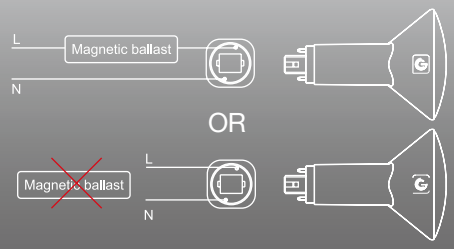

When used with a magnetic ballast, the PL V can function as a plug & play lamp and operate with the existing ballast. If the ballast is not compatible, it can be bypassed and the lamp can run directly off line voltage.

PL V 11.5W BYP TITANIUM LED SERIES

GREENCREATIVE

APPLICATIONS

Retail

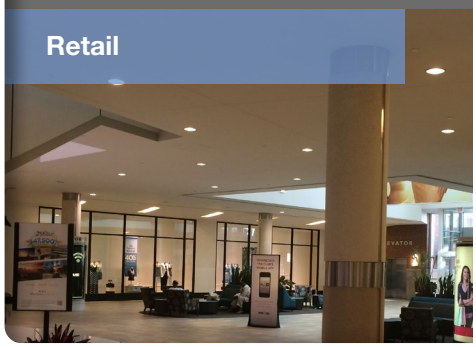

Hospitality

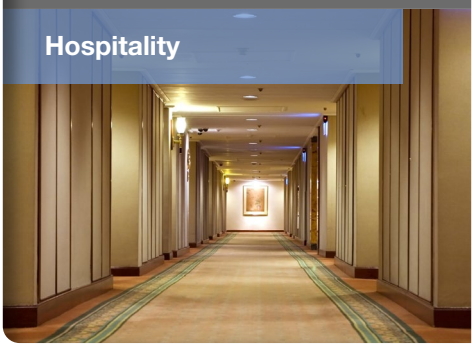

Office

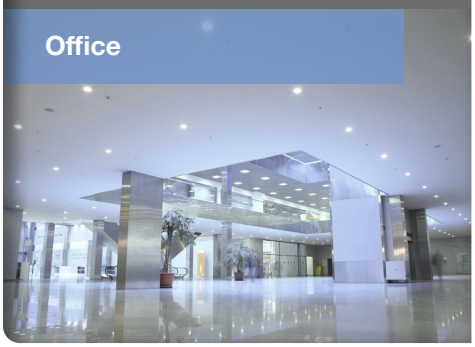

Ref.#: DS153-PLV-11.5W-BYP

Base:	G24d, GX24d, G24q & GX24q (2/4-pin CFL)
Voltage:	Magnetic ballast compatible 120-277V
Dimmable:	No
PF:	0.9
Lifetime:	50,000 hrs
Weight:	0.21lb / 95g

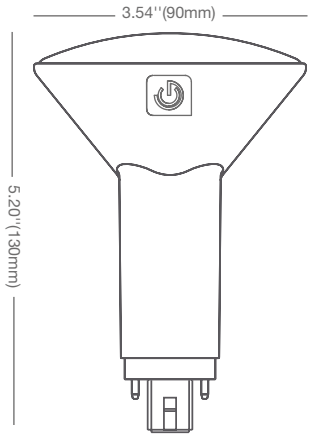

SPECIFICATIONS*

Model	Product	Power (W)	CCT	CRI (typ.)	Lumens	LPW	Beam Angle
11.5PLV/827/BYP	57921	11.5	Soft White 2700K	80	950	83	120°
11.5PLV/830/BYP	57922	11.5	Warm White 3000K	80	1000	83	120°
11.5PLV/835/BYP	57923	11.5	Neutral White 3500K	80	1000	83	120°
11.5PLV/840/BYP	57924	11.5	Cool White 4000K	80	1020	89	120°

* Specification data is preliminary and subject to change
** Suitable for damp locations. Not for use where directly exposed to weather or water
*** Not intended for use in enclosed fixtures
**** Full installation guide and more details available on website

HID LED 18.5W HO 277V TITANIUM LED SERIES

GREENCREATIVE

ENERGY STAR

PRO

Optional Lamp Extender

18.5W REPLACES

50-70W HID

70% Energy Savings

$67 Savings per lamp*

- Direct line voltage 120-277V - Not compatible with ballasts
- ENERGY STAR® certified
- Exceptional efficacy 108 LPW in Warm White
- Frosted diffuser maintains low glare
- Optional lamp extender available for use in larger fixtures
- Suitable for use in totally enclosed fixtures

40,000 H | 120-277V UNIVERSAL | 108 LPW EFFICACY | 5 YR WARRANTY | 80 CRI (Ra) | ENCLOSED**

c UL us LISTED | FC | lighting facts LED Product Partner | LM 79 | LM 80 | TM 21 | IES

HID LED PRODUCT FEATURES

Suitable for Enclosed Fixtures

This HID LED lamp replaces a 50-70W HID and is suitable for use in enclosed fixtures. Its high lumen output and exceptional efficacy make it an ideal choice for bollard, post top and other outdoor applications. An optional lamp extender is also available for use in larger fixtures.

Omnidirectional Lighting

This HID LED meets the new ENERGY STAR® V1.1 requirements for omnidirectional bulbs by providing 330° of evenly distributed light intensity. In the 135° to 180° zone, this lamp emits 65% more lumens than what is required by ENERGY STAR, providing a fuller light than other LED lamps.

HID LED 18.5W HO 277V TITANIUM LED SERIES

GREENCREATIVE

APPLICATIONS

General Lighting

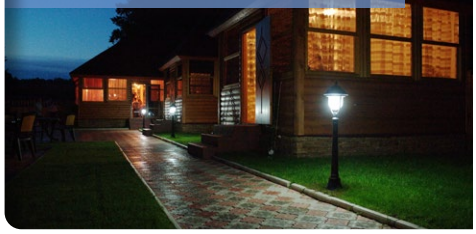

Bollard Lighting

Post Top Lighting

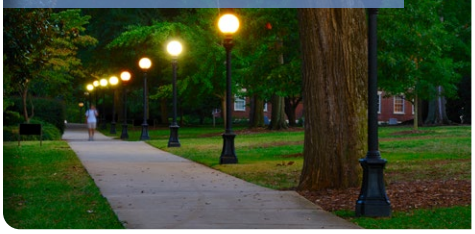

Ref.:#DS084-HID-LED-18.5W-277V

SPECIFICATIONS

Product Model	97734 18.5A21/830/277V	97735 18.5A21/840/277V	97736 18.5A21/850/277V
Type	HID LED	HID LED	HID LED
Base	E26	E26	E26
Power (W)	18.5	18.5	18.5
Voltage - Frequency	120-277V 50/60Hz	120-277V 50/60Hz	120-277V 50/60Hz
Color Temp. (ANSI)	Warm White 3000K	Cool White 4000K	Daylight 5000K
CRI (Ra) (typ.)	80	80	80
Typical lumens (lm)	2000	2000	2050
Efficacy (LPW)	108	108	111
Beam Angle	330°	330°	330°
Dimmable	No	No	No
Power Factor	0.9	0.9	0.9
Rated Lifetime - L70 (hrs.)	40,000	40,000	40,000
Dia. x MOL	2.56''x4.72'' (65x120mm)	2.56''x4.72'' (65x120mm)	2.56''x4.72'' (65x120mm)
Weight (lb. / g)	0.44lb. / 199g	0.44lb. / 199g	0.44lb. / 199g

* Savings per lamp based on $0.11 / kw energy cost, 12 hrs / day lamp usage, $12 HID with 10,000-hr lifetime, $35 LED with 25,000-hr lifetime

** Suitable for use in totally enclosed fixtures

*** Suitable for damp locations. Not for use where directly exposed to weather or water

HID LED 27W E26 TITANIUM LED SERIES

GREENCREATIVE

PRO

27W REPLACES

70-100W HID

70% Energy Savings

$182 Savings per lamp*

- Direct line voltage 120-277V - Not compatible with ballasts
- Designed for use in post top applications
- Compatible with E26 sockets
- Fully omnidirectional 320° beam angle
- Available in 4000K & 5000K CCT
- Suitable for use in totally enclosed fixtures

50,000 H | 120-277V UNIVERSAL | OMNI DIRECTIONAL | 5 YR WARRANTY | 80 CRI (Ra) | ENCLOSED**

CLASSIFIED c UL us | FC | lighting facts LED Product Partner | LM 79 | LM 80 | TM 21 | IES

HID LED PRODUCT FEATURES

Suitable for Enclosed Fixtures

This HID LED lamp replaces a 70-100W HID and is suitable for use in totally enclosed fixtures. Its high lumen output and exceptional efficacy make it an ideal choice for outdoor post top applications.

CoolSink Technology

The CoolSink passive cooling system allows air to flow freely through the lamp. This unique design uses an increased cooling surface area to reduce the operating temperature of the LED and power supply, thus resulting in longer lamp life and lumen maintenance.

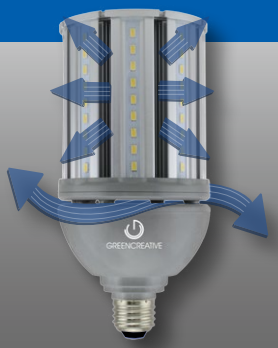

HID LED 27W E26 TITANIUM LED SERIES

GREENCREATIVE

APPLICATIONS

General Lighting

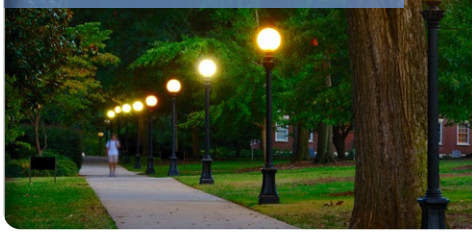

Teardrop Lighting

Post Top Lighting

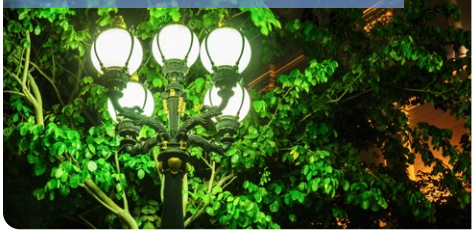

Ref.:#DS160-HID-LED-27W-277V-E26

SPECIFICATIONS

Product Model	58006 27HID/840/277V/E26	57993 27HID/850/277V/E26
Type	HID LED	HID LED
Base	E26	E26
Power (W)	27	27
Voltage - Frequency	100-277VAC 50-60Hz	100-277VAC 50-60Hz
Color Temp. (ANSI)	Cool White 4000K	Daylight 5000K
CRI (Ra) (typ.)	80	80
Lamp lumens (lm)	3150	3200
Lamp efficacy (LPW)	117	119
Beam Angle	320°	320°
Dimmable	No	No
Power Factor	0.9	0.9
Rated Lifetime - L70 (hrs.)	50,000	50,000
Dia. x MOL	3.66''x7.99'' (93x203mm)	3.66''x7.99'' (93x203mm)
Weight (lb. / g)	1.8lbs / 797g	1.8lbs / 797g

HID EQUIVALENCE

GREEN CREATIVE HID LED		Metal Halide		Mercury Vapor		High Pressure Sodium	
Power	Lumens	Power	Mean Lumens	Power	Mean Lumens	Power	Mean Lumens
27W	3150	70W	3400	100W	3300	50W	3600

* Savings per fixture based on $0.11 / kw energy cost, 12 hrs / $12 HID with 10,000-hr lifetime, $70 ballast, $90 LED HID with 50,000 hr lifetime
** Suitable for use in totally enclosed fixtures
*** Suitable for damp locations. Not for use where directly exposed to weather or water
**** Suitable for use in horizontal applications

aleo™ LED LIGHTING

Project	
Notes	
Type	Date
Cat. No.	

LTR™ Series — LED Troffer Retrofit Kit

DESCRIPTION

The Aleo LTR™ Series Troffer Retrofit Kit delivers industry-leading performance with deep energy savings and continuous dimming. Easy and quick installation reduces labor cost and optimizes ROI. The retrofit kit eliminates the need to replace existing luminaire housing, which reduces install time and disposal/removal costs. The precision-formed diffuser produces comfortable and pleasant illumination, enhancing productive spaces in various applications.

APPLICATIONS

Provides architectural aesthetics for retail, schools, offices, healthcare, and other various commercial applications.

LTR Series

2x2 18W - 22W
2x4 22W - 44W

Specification Features

Construction
Simple construction with minimal parts allows for easy handling and installation. Luminaire features matte white durable finish.

Optical System
Reflector systems features highly reflective coating and delivers balanced, comfortable illuminance for productive spaces. Diffuser lens reduces glare and improves occupant comfort while maintaining high efficiency emission.

Certification
UL Classified. All components have UL certification. UL Class 2. Driver: SCP, OTP, OVP protection, FCC Part 15 Class B, UL8750 Class 2. DLC Premium

Warranty
7-year Limited Warranty. See warranty documentation for more information.

Electrical
Luminaire utilizes high-efficacy LED packages maintained at cool temperatures for long life, high efficacy. Reliable driver features continuous dimming. Universal voltage (120-277V) for convenient installation. Comes equipped with luminaire quick-disconnect.

Installation / Mounting
Installs in most troffer luminaires. Retrofit kit fits within troffer and ceiling T-bar grid, eliminating need to remove existing fixture housing.

Controls / Dimming
Continuous dimming (0-10V) comes standard. Suitable for use with dimmers, sensors, daylight harvesting and other control strategies to achieve deeper energy-savings and code compliance.

Rated Life 75,000 hours
Limited Warranty 7-years
Efficacy Up to 127 LPW
Continuous Dimming

CONTINUOUS DIMMING 0-10V Continuous

Quick Ship

LTR-22HE-30/840
LTR-22HE-22/840
LTR-24LE-44/840
LTR-24LE-36/840

Ordering Information

Example: LTR-24LE-44/840

LTR	24	LE	44	8	40	[Blank]	[Blank]
Series	**Form Factor**	**Lumen Package**	**Rated Wattage**	**CRI**	**Color Temp**	**Input Voltage**	**Dimming**
LTR LED Troffer Retrofit Kit	**22** 2'x2' **24** 2'x4'	**VLE** Very Low Wattage **LE** Low Wattage **HE** High Lumen	**2'x2'**: **18** 18W, **22** 22W, **24** 24W, **27** 27W, **30** 30W **2'x4'**: **22** 22W, **27** 27W, **30** 30W, **36** 36W, **44** 44W	**8** 83+	**30** 3000K **35** 3500K **40** 4000K **50** 5000K	**Blank** 120V-277V	**Blank** 0-10V Continuous Dimming

Options

Emergency Backup
- **EM500** 500lm
- **EM700** 700lm
- **EM1400** 1400lm
- **EM2000** 2000lm

Controls
- **OS** Occupancy Sensor
- **OSDL** Occ. Sensor w/ Daylight
- **WA** Fixture-integrated high-end trim

Specifications and Dimensions subject to change without notice.

© 2016 Aleo Lighting, Inc. All rights reserved.

Performance Summary

Input Voltage	120V-277V
Input Frequency	50/60 Hz
Rated Wattage	See Performance Table
Delivered Lumens	See Performance Table
Efficacy	> 113 LPW (typ.)
CRI	83+, R9 > 0
Available CCT[1]	3000K, 3500K, 4000K, 5000K
Color Consistency[2]	5-step MacAdam Ellipse
Rated Life	75,000 hours
L70[3]	> 72,000 hours
Power Factor	> 0.9
THD	< 20%
Dimming	0-10V Continuous (10-100%)

Mounting Information

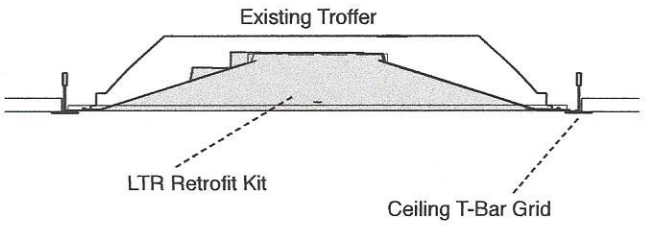

Performance Data

				3000K		3500K		4000K		5000K	
Form Factor	Catalog No.	Rated Wattage (W)	Tested Wattage (W)	Delivered Lumens (lm)	Efficacy (lm/W)	Delivered Lumens (lm)	Efficacy (lm/W)	Delivered Lumens (lm)	Efficacy (lm/W)	Delivered Lumens (lm)	Efficacy (lm/W)
2' x 2'	LTR-22HE-30	30	30	3480	116	3540	118	3600	120	3660	122
	LTR-22HE-27	27	27	3186	118	3240	120	3294	122	3348	124
	LTR-22HE-22	22	22	2596	118	2684	122	2750	125	2794	127
2' x 4'	LTR-24LE-44	44	43	4988	116	5074	118	5160	120	5246	122
	LTR-24LE-36	36	36	4428	123	4464	124	4500	125	4572	127
	LTR-24VLE-30	30	30	3450	115	3540	118	3600	120	3690	123
	LTR-24VLE-27	27	27	3132	116	3240	120	3321	123	3375	125
	LTR-24VLE-22	22	22	2640	120	2728	124	2794	127	2882	131

NOTES:

1. Quick ship: 4000K. Other CCTs may require a lead time or be special order
2. Typical color consistency. May vary or be changed.
3. L70 hours calculated based on LED package manufacturer LM80 report and ISTMT report of LED in luminaire. Stated values are for select catalog numbers. Contact manufacturer for detailed information

aleo™ LED LIGHTING

Specifications and Dimensions subject to change without notice.

© 2016 Aleo Lighting, Inc. All rights reserved.

Product **Dimensions**

LTR-22

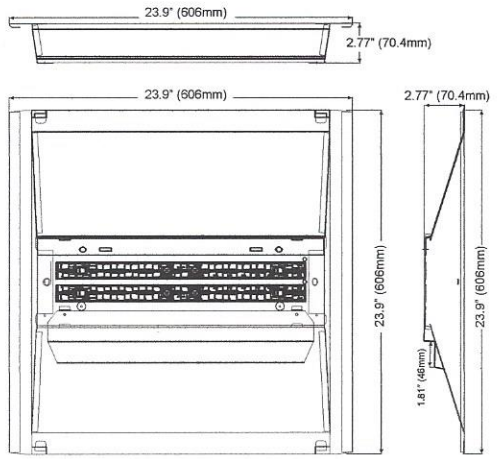

LTR-24

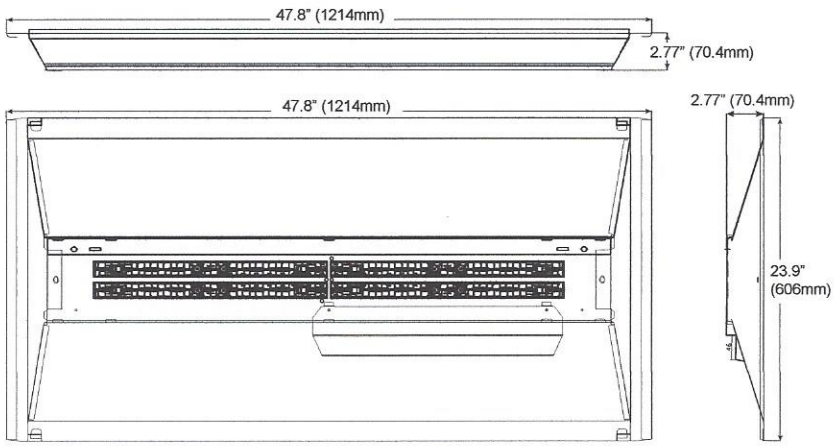

Photometric Data

LTR-24LE-44/830 4979 delivered lumens, tested in accordance to IESNA LM-79

Polar Graph

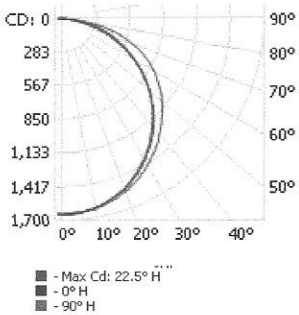

Zonal Lumen Summary

ZONE	LUMENS	% LUMINAIRE
0-30	1,283.0	25.80%
0-40	2,107.3	42%
0-60	3,788.8	76.10%
60-90	1,189.9	23.90%
70-100	524.0	10.50%
90-120	0.0	0%
0-90	4,978.6	100%
90-180	0.0	0%
0-180	4,978.7	100%

Coefficients of Utilization

EFFECTIVE FLOOR CAVITY REFLECTANCE: 20%

RCC%	80				70				50	
RW%	**70**	**50**	**30**	**0**	**70**	**50**	**30**	**0**	**50**	**30**
RCR										
0	1.19	1.19	1.19	1.19	1.16	1.16	1.16	1	1.11	1.11
1	1.08	1.03	0.99	0.95	1.05	1.01	0.97	0.84	0.97	0.93
2	0.98	0.89	0.82	0.76	0.95	0.87	0.81	0.69	0.84	0.78
3	0.89	0.78	0.7	0.63	0.87	0.76	0.69	0.59	0.73	0.67
4	0.81	0.69	0.6	0.53	0.79	0.68	0.59	0.5	0.65	0.58
5	0.75	0.61	0.52	0.45	0.73	0.6	0.52	0.43	0.58	0.5
6	0.69	0.55	0.46	0.39	0.67	0.54	0.46	0.38	0.52	0.45
7	0.64	0.5	0.41	0.35	0.62	0.49	0.41	0.34	0.48	0.4
8	0.59	0.46	0.37	0.31	0.58	0.45	0.37	0.3	0.43	0.36
9	0.55	0.42	0.33	0.28	0.54	0.41	0.33	0.27	0.4	0.33
10	0.52	0.39	0.3	0.25	0.51	0.38	0.3	0.25	0.37	0.3

LTR-24LE-36/830 4211 delivered lumens, tested in accordance to IESNA LM-79

Polar Graph

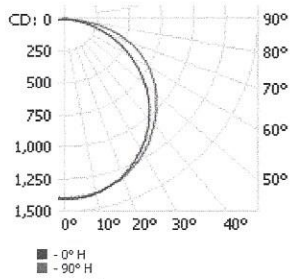

Zonal Lumen Summary

ZONE	LUMENS	% LUMINAIRE
0-30	1,090.5	25.90%
0-40	1,789.7	43%
0-60	3,213.1	76.30%
60-90	997.4	23.70%
70-100	435.6	10.30%
90-120	0.1	0%
0-90	4,210.5	100%
90-180	0.1	0%
0-180	4,210.6	100%

Coefficients of Utilization

EFFECTIVE FLOOR CAVITY REFLECTANCE: 20%

RCC%	80				70				50	
RW%	**70**	**50**	**30**	**0**	**70**	**50**	**30**	**0**	**50**	**30**
RCR										
0	1.19	1.19	1.19	1.19	1.16	1.16	1.16	1	1.11	1.11
1	1.08	1.03	0.99	0.95	1.06	1.01	0.97	0.84	0.97	0.93
2	0.98	0.89	0.82	0.76	0.95	0.88	0.81	0.7	0.84	0.78
3	0.89	0.78	0.7	0.63	0.87	0.77	0.69	0.59	0.74	0.67
4	0.81	0.69	0.6	0.53	0.79	0.68	0.59	0.5	0.65	0.58
5	0.75	0.62	0.52	0.45	0.73	0.6	0.52	0.43	0.58	0.51
6	0.69	0.55	0.46	0.4	0.67	0.54	0.46	0.38	0.52	0.45
7	0.64	0.5	0.41	0.35	0.62	0.49	0.41	0.34	0.48	0.4
8	0.59	0.46	0.37	0.31	0.58	0.45	0.37	0.3	0.44	0.36
9	0.55	0.42	0.33	0.28	0.54	0.41	0.33	0.27	0.4	0.33
10	0.52	0.39	0.31	0.25	0.51	0.38	0.3	0.25	0.37	0.3

aleo™
LED LIGHTING

© **2016 Aleo Lighting, Inc.** All rights reserved. For informaitonal purposes only. Reproduction in whole or part is prohibited without prior written consent of the copyright owner. The information presented in this document does not form part of any quotation or contract, is believed to be accurate and reliable and may be changed without notice. No liability will be accepted by the publisher for any consequences of its use. Aleo Lighting reserves the rights make chages in specification at any time without notice.

Aleo Lighting, Inc.
www.aleolighting.com
6080 Center Dr., Suite 600
Los Angeles, CA 90045
Ph: 877-358-8825

A19 8.5W DIM. TITANIUM LED SERIES

GREENCREATIVE

ENERGY STAR

PRO

8.5W REPLACES

60W Inc.

80% Energy Savings

$157 Savings per lamp*

- Omnidirectional: 330° beam angle
- Exceptional efficacy 94 LPW in Warm White
- 40% more energy savings than CFL
- Comfortable warm diffused light
- Natural A-lamp shape fits all applications
- Ideal for lamps with shades

25,000 H | DIMMABLE | 94 LPW EFFICACY | 3 YR WARRANTY | 80 CRI (Ra) | OMNI DIRECTIONAL

c UL us LISTED | FC | lighting facts LED Product Partner | LM 79 | LM 80 | TM 21 | IES

A19 PRODUCT FEATURES

This A19 meets the new ENERGY STAR V1.1 requirements for omnidirectional bulbs by providing 330° of evenly distributed light intensity. In the 135° to 180° zone, this lamp emits 65% more lumens than what is required by ENERGY STAR, providing a fuller light than other LED A-lamps.

Exceptional Efficacy

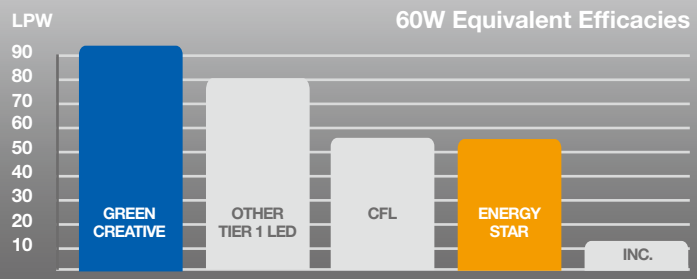

At 94 LPW, this lamp's efficacy is more than 15% higher than the Tier 1 LED A19 60W replacement industry average and exceeds new ENERGY STAR requirements by upwards of 65%. This energy-saving performance makes this lamp a smart retrofit choice for incandescent and CFL bulbs.

www.greencreative.com / info@greencreative.com - Tel / Fax: (866) 774-5433 - / GREENCREATIVELED / GClightingLED / GREEN CREATIVE

A19 8.5W DIM. TITANIUM LED SERIES

GREENCREATIVE

APPLICATIONS

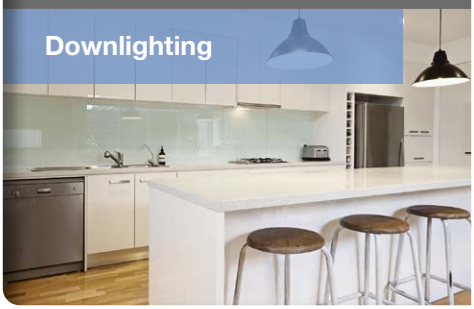

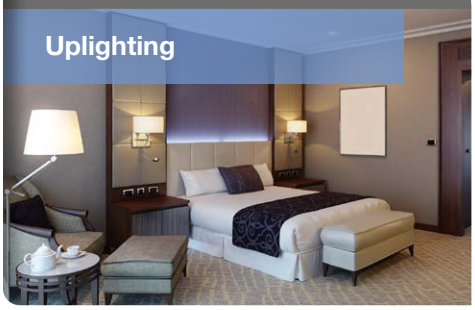

Ref.#: DS118-A19-8.5W

SPECIFICATIONS

Product Model	57856 8.5A19DIM/827	57857 8.5A19DIM/830	57858 8.5A19DIM/840
Type	A19	A19	A19
Base	E26	E26	E26
Power (W)	8.5	8.5	8.5
Voltage - Frequency	120V 60Hz	120V 60Hz	120V 60Hz
Color Temp. (ANSI)	Soft White 2700K	Warm White 3000K	Cool White 4000K
CRI (Ra) (typ.)	80	80	80
Typical lumens (lm)	800	800	850
Efficacy (LPW)	94	94	100
Beam Angle	330°	330°	330°
Dimmable	Yes**	Yes**	Yes**
Power Factor	0.9	0.9	0.9
Rated Lifetime - L70 (hrs.)	25,000	25,000	25,000
Dia. x MOL	2.36"x4.35" (60x110mm)	2.36"x4.35" (60x110mm)	2.36"x4.35" (60x110mm)
Weight (lb. / g)	0.13lb. / 59g	0.13lb. / 59g	0.13lb. / 59g

* Savings per lamp based on $0.11 / kw energy cost, 12 hrs / day lamp usage, $2 incandescent with 1000-hr lifetime, $11 LED with 25,000-hr lifetime

** List of tested dimmer switches available on website
*** Not intended for use in totally enclosed fixtures
**** Suitable for damp locations. Not for use where directly exposed to weather or water

BR30 8W DIM. TITANIUM LED SERIES 4.0

GREENCREATIVE

ENERGY STAR

PRO

CLOUD DESIGN

2014 IES PROGRESS Report SELECTION

8W REPLACES

65W Inc.

80% Energy Savings

$195 Savings per lamp*

- Revolutionary CLOUD design
- 60% lighter due to environmentally friendly construction
- Exceptional efficacy 81 LPW in Warm White
- Smooth dimming with existing installations
- Accurate color rendering CRI 82
- Extra Warm White, Warm White & Natural White CCT

25,000 H | DIMMABLE | 81 LPW EFFICACY | 3 YR WARRANTY | 82 CRI (Ra) | ENCLOSED**

c UL us LISTED | FC | lighting facts LED Product Partner | LM 79 | LM 80 | TM 21 | IES

BR PRODUCT FEATURES

Revolutionary CLOUD Design

The BR30 CLOUD features an innovative design that provides more efficient light output than previous generations while using 35% less material. This environmentally friendly lamp weighs less than 100g and maintains a traditional incandescent form factor, making it suitable for all applications.

Exceptional Efficacy

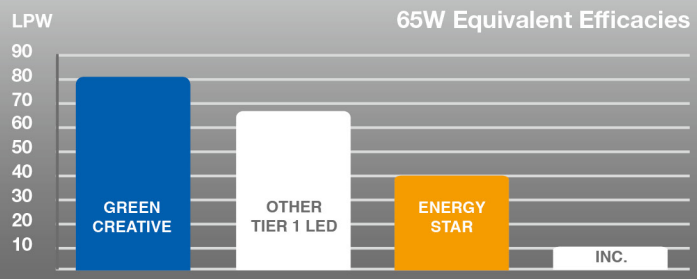

At 81 LPW, this lamp's efficacy is more than 20% higher than the Tier 1 LED BR30 65W replacement industry average and exceeds ENERGY STAR requirements by upwards of 100%. This energy-saving performance makes this lamp a smart retrofit choice for incandescent bulbs.

BR30 8W DIM. TITANIUM LED SERIES 4.0

GREENCREATIVE

Ref.#: DS033-BR30-8W

APPLICATIONS

General Lighting

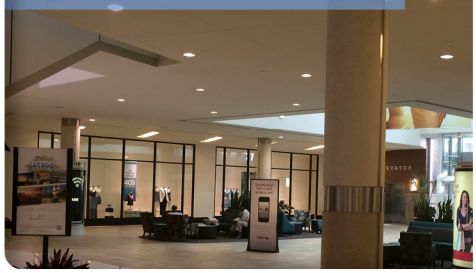

Recessed Lighting

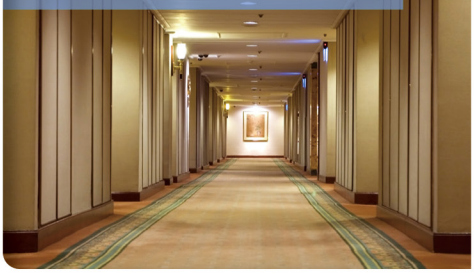

Accent Lighting

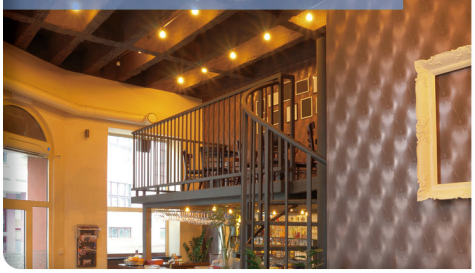

SPECIFICATIONS

Product Model	40770 8BR30G4DIM/824	40771 8BR30G4DIM/827	40772 8BR30G4DIM/830	40773 8BR30G4DIM/840
Type	BR30	BR30	BR30	BR30
Base	E26	E26	E26	E26
Power (W)	8	8	8	8
Voltage - Frequency	120V 60Hz	120V 60Hz	120V 60Hz	120V 60Hz
Color Temp. (ANSI)	Extra Warm White 2400K	Warm White 2700K	Warm White 3000K	Natural White 4000K
CRI (Ra)	80	82	82	82
Typical lumens (lm)	585	650	685	710
Efficacy (LPW)	73	81	86	89
Beam Angle	110°	110°	110°	110°
Dimmable	Yes***	Yes***	Yes***	Yes***
Power Factor	0.9	0.9	0.9	0.9
Rated Lifetime - L70 (hrs.)	25,000	25,000	25,000	25,000
Dia. x MOL	3.74"x5.20" (95x132mm)	3.74"x5.20" (95x132mm)	3.74"x5.20" (95x132mm)	3.74"x5.20" (95x132mm)
Weight (lb. / g)	0.21lb. / 96g	0.21lb. / 96g	0.21lb. / 96g	0.21lb. / 96g

* Savings per lamp based on $0.11 / kw energy cost, 12 hrs / day lamp usage, $4 incandescent with 1000-hr lifetime, $30 LED with 25,000-hr lifetime
** Suitable for use in totally enclosed fixtures
*** List of tested dimmer switches available on website
**** Suitable for damp locations. Not for use where directly exposed to weather or water

Features & Benefits

- No rewiring needed
- Works with fluorescent electronic ballast (Instant Start and Programmed Start)*
- Long life
- High CRI
- Instant on, no delay
- Convenient and quick installation
- Utilizes existing instant start or rapid start sockets
- No Mercury, No UV
- Compatible with controls and sensors
- Works in cold temperature applications
- Glass tube for superior optical performance
- 5 Year Warranty
- Super Wide View Angle

RetroFlex™ HE

LED T8 LAMP • Simplicity.

Direct Replacement of Fluorescent
Commercial Grade LED T8 Lamp

Specification Data

Order Code	Length	Lamp Wattage	System Wattage	CCT	Initial Lumens	CRI	Beam Angle	Lamp Efficacy	Life	DLC
L48T8/850/12G-EB	48"	12W	14W	5000K	1800	83	325°	135	50,000	Yes
L48T8/840/12G-EB	48"	12W	14W	4000K	1800	83	325°	135	50,000	Yes
L48T8/835/12G-EB	48"	12W	14W	3500K	1800	83	325°	135	50,000	Yes
L36T8/850/10G-EB	36"	10W	13W	5000K	1400	83	325°	135	50,000	
L36T8/840/10G-EB	36"	10W	13W	4000K	1400	83	325°	135	50,000	
L36T8/835/10G-EB	36"	10W	13W	3500K	1400	83	325°	135	50,000	
L24T8/850/8G-EB	24"	8W	11W	5000K	1100	83	325°	135	50,000	Yes
L24T8/840/8G-EB	24"	8W	11W	4000K	1100	83	325°	135	50,000	Yes
L24T8/835/8G-EB	24"	8W	11W	3500K	1100	83	325°	135	50,000	Yes

*Based on Normal Ballast Factor

System performance

Model #: L48T8/8XX/12G-EB

Specification	Low Ballast Factor (0.77)	Normal Ballast Factor (0.88)	High Ballast Factor (1.18)
Lamp Wattage	10W	12W	16W
System Wattage	12W	14W	18W
Lumen Output	1380 lm	1800 lm	2200 lm
Lamp Efficacy (lm/W)	135 lm/W	135 lm/W	135 lm/W

Model #: L24T8/8XX/8G-EB

Specification	Low Ballast Factor (0.77)	Normal Ballast Factor (0.88)	High Ballast Factor (1.18)
Lamp Wattage	7W	8W	10W
System Wattage	10W	11W	13W
Lumen Output	945 lm	1100 lm	1350 lm
Lamp Efficacy (lm/W)	135 lm/W	135 lm/W	135 lm/W

*** Please check ballast compatibility list before installation.**

Specification data is based on tests performed in a controlled environment and represents relative performance. Actual performance can vary depending on operating conditions. Application and performance data subject to change without notice. All specifications are nominal unless noted otherwise.

Espen Technology, Inc. | 12257 Florence Avenue | Santa Fe Springs, CA 90670 | Phone: (562) 529-2938 | Fax: (562) 529-2978

Toll Free:(866) 933-7736 | Email: info@espentech.com | www.espentech.com

www.sylvania.com

QUICKTRONIC® T8 Instant Start Universal Voltage Systems

NEMA Premium

RoHS compliant

Low Ballast Factor

High Efficiency Series

QHE T8 ISL

Lamp / Ballast Guide

32W T8 - OCTRON® lamps
QHE ISL SC Models
1-lamp QHE1x32T8/UNV
2-lamp QHE2x32T8/UNV
3-lamp QHE3x32T8/UNV
4-lamp QHE4x32T8/UNV

Also operates:
FBO32, FBO31, FO25, FBO24, FO17, FBO16, FO30/SS (30W), FBO30/SS (30W), FBO29/SS (29W), FO28/SS (28W) & FO25/SS (25W)

FO40T8 operation:
1 lamp on 2L ballast; 2 lamps on 3L ballast; 3 lamps on 4L ballast

Key System Features

- High Efficiency Systems over 90% efficient
- NEMA Premium Electronic Ballast Program compliant
- Over 100 LPW (lumens/watt) with OCTRON SUPERSAVER® lamps
- Lowest power T8 I.S. Systems
- Universal voltage (120-277)
- Small Can enclosure size
- 30-50% Energy savings
- Min. Starting Temp:
  - -20°F (-29°C) for T8 lamps
  - 60°F (16°C) for Energy Saving T8 lamps
  - 0°F (-18°C) for FO40T8 lamps
- <10% THD
- Virtually eliminates lamp flicker
- RoHS compliant
- Lead-free solder, printed circuit board and manufacturing process

Application Information

SYLVANIA QUICKTRONIC High Efficiency ballasts are ideally suited for:

- Any applications where the lowest power T8 systems are needed for maximum energy savings
- Energy Retrofits
- Commercial & Retail
- Hospitality & Institutional
- New Construction

SYLVANIA QUICKTRONIC High Efficiency, (QHE) energy-saving electronic T8 ballasts offer several advantages:

1. **Same Light, Less Power!**
   - **Up to 6% in energy savings** compared to standard T8 low power electronic ballasts without compromising light output
   - **30-44% energy savings** when compared to F40T12 magnetically ballasted systems (see table below)
2. **Parallel Circuitry:** keeps remaining lamps lit if one or more go out.
3. **Small Can Enclosure for:**
   - low profile fixture design
   - transportation, inventory and ergonomic benefits
4. **NEMA Premium Electronic Ballast Program compliant.** The program promotes the use of high efficiency T8 electronic ballasts by meeting or exceeding the Ballast Efficiency Factors, (BEF) established by the CEE, (Consortium for Energy Efficiency).

For additional information on this program go to: ***www.cee1.org or www.nema.org***

5. **New Banded Packaging**
   - Distributor-friendly for easy stocking and individual ballast sales
   - Reduced waste
   - Easy removable bands
   - No tangled wires

These ballasts are also RoHS compliant and feature lead-free solder, printed circuit boards and manufacturing process.

SYLVANIA QUICKTRONIC High Efficiency (QHE) systems are covered by the QUICK 60+® warranty, the first and most comprehensive lamp & ballast system warranty in the industry.

System Information

SYLVANIA QUICKTRONIC High Efficiency (QHE) System advantages:

- Operate from 120V through 277V
  - Eliminates "wrong voltage" errors
  - Reduces inventory by 50%
- Utilizes Instant Start operation for
  - Highest System Efficacy
  - Low temperature starting capability
- Very low harmonic distortion (<10%)THD
- Operate at >42kHz to reduce potential interference with infrared control systems

A complete OSRAM SYLVANIA System Performance Guide showing performance characteristics for all combinations of lamps and ballasts is available upon request.

System Type (2-lamp)	Input Power (W)	Initial System Lumens	System Efficacy LPW	Mean System Lumens	Relative Mean Light Output	Energy Savings
F34T12 - E.S. Magnetic Ballast	72	4660	65	3960	Baseline	Baseline
FO32/XP - QHE2x32T8/UNV ISL-SC	**48**	**4680**	**98**	**4440**	**112%**	**33%**
FO28/SS - QHE2x32T8/UNV ISL-SC	**42**	**4250**	**101**	**3995**	**101%**	**42%**

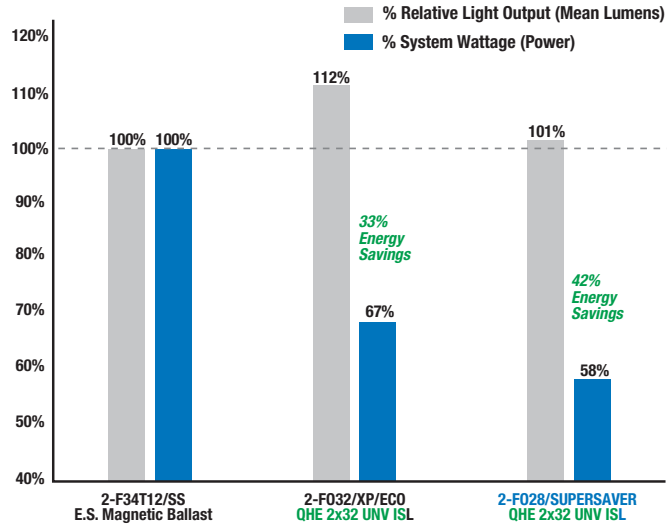

SEE THE WORLD IN A NEW LIGHT SYLVANIA

SPECIFICATION DATA

Catalog #	Date	Type
Project	Prepared by	
Comments		

High Efficiency Universal Voltage (120-277V)

Item Number	OSRAM SYLVANIA Description	Input Current (AMPS)	Lamp Type	Rated Lumens (lm)	No. of Lamps	Ballast Factor (BF)	System Lumens	Mean Lumens	Input Power (W)	System Efficacy (lm/W)	BEF[1]
	QHE 1X32T8/UNV ISL-SC	0.21/0.09	F032/700	2800	1	0.78	2185	1965	25	87	3.12
49837	*Banded Pack*	0.21/0.09	F032/XP	3000	1	0.78	2340	2200	25	94	3.12
49861	*10-Pack*	0.20/0.09	F030/SS	2850	1	0.78	2225	2090	24	93	3.25
49862	*Pallet Pack*	**0.19/0.08**	**F028/SS**	**2725**	**1**	**0.78**	**2125**	**2000**	**22**	**97**	**3.55**
		0.17/0.08	F025/SS	2475	1	0.78	1930	1815	20	97	3.90
	QHE 2X32T8/UNV ISL-SC	0.41/0.18	F032/700	2800	2	0.78	4370	3930	48	91	1.63
49838	*Banded Pack*	0.41/0.18	F032/XP	3000	2	0.78	4680	4400	48	98	1.63
49863	*10-Pack*	0.38/0.16	F030/SS	2850	2	0.78	4445	4180	45	99	1.73
49864	*Pallet Pack*	**0.35/0.15**	**F028/SS**	**2725**	**2**	**0.78**	**4250**	**3995**	**42**	**101**	**1.86**
		0.32/0.14	F025/SS	2475	2	0.78	3860	3630	38	102	2.05
	QHE 3X32T8/UNV ISL-SC	0.61/0.27	F032/700	2800	3	0.78	6550	5895	73/72	90/91	1.08
49839	*Banded Pack*	0.61/0.27	F032/XP	3000	3	0.78	7020	6600	73/72	96/98	1.08
49865	*10-Pack*	0.58/0.25	F030/SS	2850	3	0.78	6670	6270	68	98	1.15
49866	*Pallet Pack*	**0.53/0.23**	**F028/SS**	**2725**	**3**	**0.78**	**6380**	**5995**	**63**	**101**	**1.24**
		0.48/0.21	F025/SS	2475	3	0.78	5790	5445	57	102	1.37
	QHE 4X32T8/UNV ISL-SC	0.80/0.35	F032/700	2800	4	0.78	8735	7860	95	92	0.82
49840	*Banded Pack*	0.80/0.35	F032/XP	3000	4	0.78	9360	8800	95	99	0.82
49867	*10-Pack*	0.75/0.32	F030/SS	2850	4	0.78	8890	8360	89	100	0.88
49868	*Pallet Pack*	**0.71/0.31**	**F028/SS**	**2725**	**4**	**0.78**	**8500**	**7990**	**84**	**101**	**0.93**
		0.62/0.27	F025/SS	2475	4	0.78	7720	7260	76/75	102/103	1.04

Banded Pack, (add "-B" to Description). Banded Pack and 10-Pack contain 10 pieces each. Pallet Pack contains 840 pieces, (add "-PAL" to Description).
1: Ballast Efficiency Factor (BEF) shown = (Ballast Factor x 100) divided by Input Power (Note: calculation based on lowest wattage value).

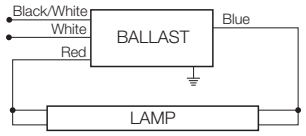

QUICKTRONIC 1x32

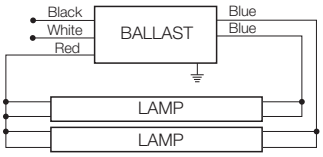

Note: For one lamp application, cap any blue lead. Insulate to 600 volts.

QUICKTRONIC 2x32

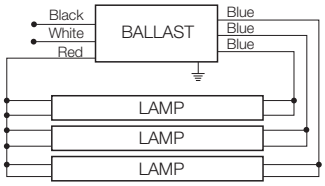

Note: For two lamp application, cap any blue lead. For one lamp application, cap any two blue leads. Insulate to 600 volts.

QUICKTRONIC 3x32

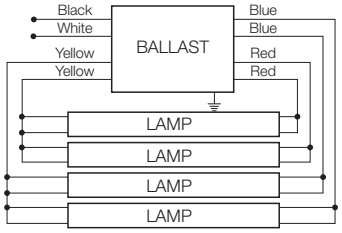

Note: For three lamp application, cap any unused blue lead. For two lamp application, cap two blue leads individually. For one lamp application, cap two blue leads, one red and one yellow lead individually. Insulate to 600 volts.

QUICKTRONIC 4x32

Dimensions:
Overall: 9.5" L x 1.68" W x 1.18" H
Mounting: 8.90"

Wiring:
Leads only
(no connectors provided)

Product Weight:
1.6 lbs each (approx)

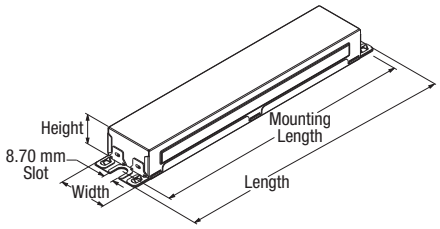

Item Number — **49838 QHE 2 x 32T8 / UNV ISL - SC** — Case Size
QUICKTRONIC High Efficiency — Starting/Ballast Factor
Number of Lamps — Line Voltage (120-277V)
Primary Lamp Wattage

Low Ballast Factor

T8 Instant Start

High Efficiency

Performance Guide

Data based upon SYLVANIA OCTRON® lamps shown. QUICKTRONIC® QHE Instant Start ballasts are also compatible with other lamp manufacturers equivalent lamp types that meet ANSI specifications.

QHE Instant Start ballasts will operate F17, F25 and F32 (and the SUPERSAVER® & U-Bend equivalent) T8 lamps. Complete performance data is available in the QUICKSYSTEMS section of the SYLVANIA Electronic Ballast Catalog.

QHE T8 ISL

Specifications

Data based on F32T8

Starting Method: Instant Start
Ballast Factor: 0.78
Circuit Type: Parallel
Lamp Frequency: >40kHz
Lamp CCF: Less than 1.7
Starting Temp:[2]
-20°F (-29°C) for OCTRON T8 lamps;
60°F (16°C) for SUPERSAVER® T8 lamps
0°F (-18°C) for FO40T8
Input Frequency: 50/60 Hz
Low THD: <10%
Power Factor: >98%
Voltage Range: ±10% of 120-277V rated line (108-305V)

UL Listed Class P, Type 1 Outdoor
CSA Certified
70°C Max Case Temperature
FCC 47CFR Part 18 Non-Consumer Class A Sound Rating
RoHS Compliant[3]
NEMA Premium Electronic Ballast Program compliant
ANSI C62.41 Cat. A Transient Protection
GFCI compatible
Emergency ballast compatible
Remote Mounting (Max. wire length from ballast case to lampholder):
- 20 ft: full wattage T8s
- 10 ft: energy saving T8s
- 4 ft: 25W energy saving T8s

2 Operation below 50°F (10°C) may affect light output or lamp operation – see "Low Temp. Starting" definition.

3 Complies with European Union Restriction of Hazardous Substances Directive (Directive EC 2002/95)

System Life / Warranty

QUICKTRONIC products are covered by the QUICK 60+® warranty, a comprehensive lamp and ballast system warranty. For additional details, refer to the QUICK 60+ warranty bulletin.

OSRAM SYLVANIA
National Customer
Service and Sales Center
1-800-LIGHTBULB
(1-800-544-4828)
www.sylvania.com

Specifications subject to change without notice.

©2011 OSRAM SYLVANIA

SYLVANIA, the system solution, See the World in a New Light, OCTRON, XP, SUPERSAVER and QUICK60+ are registered trademarks of OSRAM SYLVANIA Inc.
QUICKTRONIC is a registered trademark of OSRAM GmbH.

the system solution®

LEVITON®

Multi-Technology Ceiling Occupancy Sensor with Isolated Relay

BASIC OPERATION

Occupancy sensors have two tasks: 1) Keeping the lights ON while the room is occupied, and 2) Saving energy by keeping the lights OFF while the room is unoccupied.

Leviton's OSCxx-RMW sensors combine the benefits of both PIR and U/S technologies for unrivaled performance and reliability. Additionally, the sensor is designed with an isolated relay contact; which enables the sensor to interface with other systems (example: BAS, HVAC or any dry-contact capable device or system).

APPLICATIONS

- Cafeterias
- Computer rooms
- Day care centers
- Workspaces
- Restrooms
- Offices with cubicles
- Classrooms
- Conference rooms
- Stairwells
- Executive, open, and private offices

FEATURES

- Multi-Technology: By using both PIR and U/S signals, the sensor minimizes false triggering for high reliability.
- Isolated Relay: Supports HVAC or other Class 2 low voltage signals
- Supports both 24VAC/VDC power supplies
- Wide Coverage: Units from 500 to 2000 sq. ft. available.
- Self-Adjusting: Internal microprocessor continually analyzes, evaluates and adjusts the sensitivity and time delay. Performance is kept at a maximum and user complaints are eliminated.
- Custom white color matched for most common daylight harvesting architecture
- Uses OSPxx Series Power Pack: Uses Class 2, 24 volt wiring, three wire connection (low voltage). Multiple sensors can control single or multiple power packs.
- Additional mid-range lens assembly included for applications with mounting heights between 12'-20'
- Fast, Simple Installation: Easy ceiling mount, twist-lock sensor attachment for 360° rotation and flexibility.
- Small Motion Sensitivity: The ultrasonic technology provides excellent small motion sensitivity.
- Timer Setting Feature: Automatic - 30sec - 30min. Test mode - 4sec with auto exit programming.
- Non-Volatile Memory: Learned and adjusted settings saved in protected memory are not lost during power outages.
- Walk-Through: Provides increased energy savings by decreasing the time delay to 2.5min when someone momentarily walks through the monitored space.
- Ultrasonic (U/S) Components: One or two U/S transducers and one or two narrow bandwidth receivers each 16mm in diameter. Frequency -- Crystal controlled to ±.005%.
- Device: Rugged, high-impact, injection molded plastic, white. Color coded leads 7" (17.78 cm).

OSCxx-RMW

Leviton Mfg. Co., Inc. Lighting & Energy Solutions
201 N. Service Rd. Melville, NY 11747-3138 Tech Line: 1-800-824-3005 Fax: 1-800-832-9538 www.leviton.com/les
© 2011 Leviton Manufacturing Co., Inc. All rights reserved. Subject to change without notice.

PRODUCT DATA

HOW THE OSCxx-R AUTOMATICALLY ADAPTS

Condition	Example	Adaptive Reaction
Timer Left In Test Mode - The sensor remains in an 4 sec. test mode.	An installer accidentally leaves the sensor in the 4 sec. timer test mode and the lights may go off or on every 4 sec.	The sensor automatically resets the timer to the preset time delay after 15 minutes of test mode
False-On - The sensor incorrectly turns the lights on.	The sensor detects movement in the corridor or hallway and the room lights turn on.	After an initial movement is sensed, if another movement is not sensed within the timer setting then the delayed off time setting is automatically reduced.
False-Off - The sensor incorrectly turns the lights off.	The sensor does not detect movement because an occupant sits virtually motionless at a desk and the lights turn off.	If motion is sensed within a short period after the lights go off, then the current delayed off-time setting is increased.

DIP SWITCH SETTINGS			
SWITCH		**SWITCH FUNCTIONS**	**SWITCH SETTINGS**
	BANK A	**OFF**	**ON**
A1	Single/Multi-tech	**Multi-Tech**	Single Tech
A2	PIR/Ultrasonic	**PIR****	Ultrasonic
A3	Manual Mode	**Auto Adapting Enabled**	Auto Adapting Disabled
A4	Walk-Thru Disable	Walk-Thru Enabled	**Walk-Thru Disabled**
	BANK B		
B1	Override to On	**Auto Mode**	Lights forced On
B2	Override to Off	**Auto Mode**	Lights forced Off
B3	Test Mode	**OFF'ON'OFF**	Enter/Exit Test Mode
B4	LED Disable	**LEDs Enabled**	LEDs Disabled

*Bold items are factory defaults
**This setting is only used if the Single Techonology Option (Switch A1) is selected

FIELD-OF-VIEW

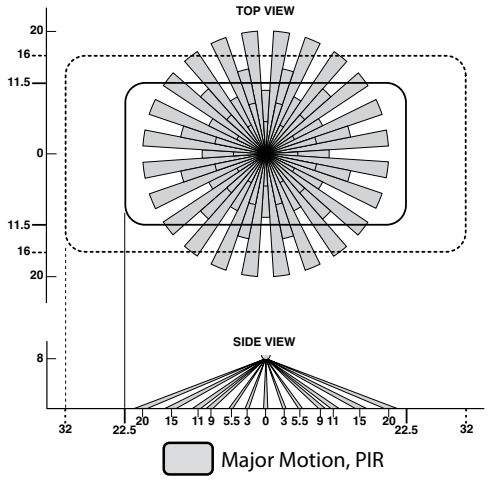

OSC20-R, 2000 sq. ft.

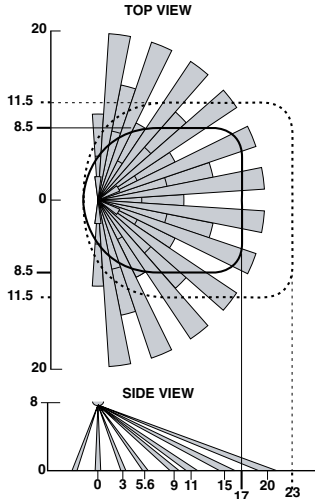

OSC05-R, 500 sq. ft.

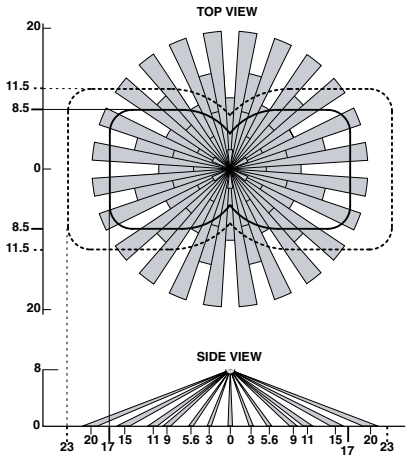

OSC10-R, 1000 sq. ft.

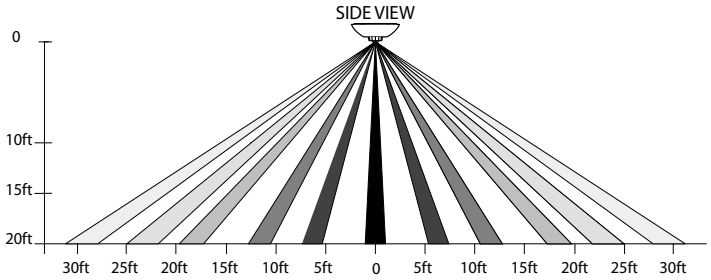

Mid-Bay Lens

PHYSICAL WIRING

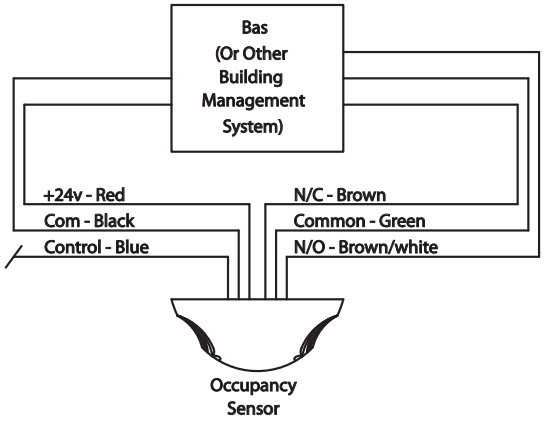

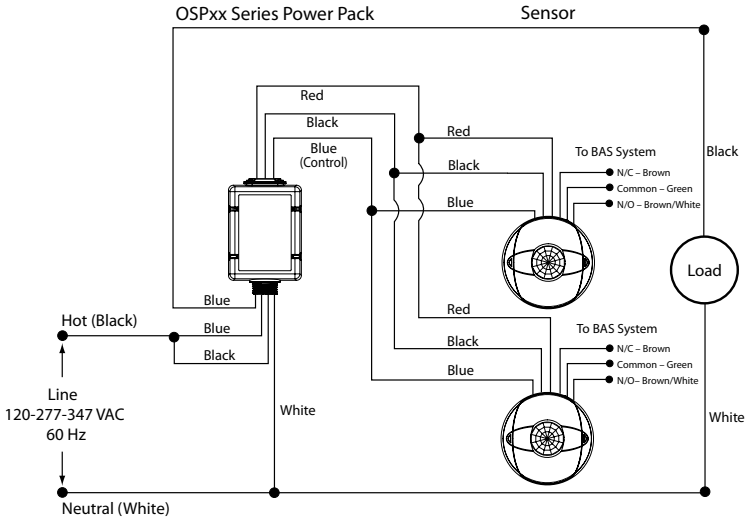

SPECIFICATIONS

ELECTRICAL	
Power Requirements	15-28 VAC/VDC from OSPxx Power Pack or other Class 2 power supplies
Isolated Relay	1A @ 30VAC/VDC
Power Consumption	DC: OSC05: 25mA, OSC10: 30mA, OSC20: 30mA AC: OSC05: 45mA, OSC10: 50mA, OSC20: 50mA
Output	24 VDC active high logic control signal with short circuit protection
CONTROLS	
Ultrasonic Frequency	OSC05/OSC10: 40kHz OSC20: 32kHz
Ultrasonic Sensitivity	0-100%; green knob (factory setting: 50%)
Infrared Sensitivity	0-100%; red knob; (factory setting: 75%)
Time Delay	30sec-30min; black knob (factory setting: 10min)
INDICATORS	
Green LED	U/S motion technology
Red LED	Infrared motion technology
ENVIRONMENTAL	
Operating Temperature Range	32°F to 104°F (0°C to 40°C)
Relative Humidity	0% to 95% non-condensing, for indoor use only
OTHER	
Mouting Height	Low-range lens (default) 8-12 feet Mid-range lens 12-20 feet
Dimensions	4.2" W x 1.57" D
Listings	CUL/US Certified, meets ASHRAE Standard 90.1 and CEC Title 24 requirements
Warranty	Limited Five-Year Warranty

ORDERING INFORMATION

CAT NO.	DESCRIPTION
OSC05-RMW	Multi-Technology Ceiling Sensor, 500 sq. feet of coverage
OSC10-RMW	Multi-Technology Ceiling Sensor, 1000 sq. feet of coverage
OSC20-RMW	Multi-Technology Ceiling Sensor, 2000 sq feet of coverage

NAFTA compliant and Made in USA models available

Leviton Mfg. Co., Inc. Lighting Management Systems
20497 SW Teton Avenue, Portland, OR 97062 1-800-736-6682 Tech Line: 1-800-959-6004 Fax: 503-404-5594 www.leviton.com/lms
© 2010 Leviton Manufacturing Co., Inc. All rights reserved. Subject to change without notice.

Leviton Manufacturing Co., Inc. Lighting & Energy Solutions
201 N. Service Rd. Melville, NY 11747-3138 Tech Line: 1-800-824-3005 Fax: 1-800-832-9538 www.leviton.com/les

Visit our Website at: www.leviton.com/les

© 2011 Leviton Manufacturing Co., Inc. All rights reserved. Subject to change without notice.

369779b 1 10.30.2014

PowPak® Dimming Module with 0–10 V Control

The PowPak® Dimming Module with 0–10 V Control is a radio frequency (RF) control that operates 0–10 V controlled fluorescent ballasts or LED drivers based on input from Pico® wireless controls and Radio Powr Savr™ sensors. The Dimming Module with 0–10 V Control is ideal for small areas (e.g., classrooms, conference rooms, private offices).

Communication with RF input devices (e.g., Pico® wireless controls, Radio Powr Savr™ sensors) is accomplished by using Lutron® Clear Connect® RF Technology.

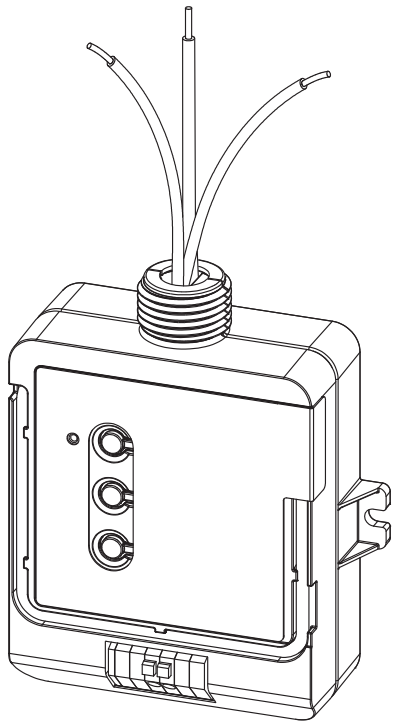

Features

- Controls up to 60 mA of 0–10 V controlled fixtures together
- Switches up to 5 A total
- 0–10 V control link automatically sources or sinks to the third party fixtures
- Configurable high- and low-end trim
- Various operating voltages available; refer to model number chart below for details on voltage requirements
- Receives input from up to nine Pico® wireless controls, six Radio Powr Savr™ occupancy/vacancy sensors, and one Radio Powr Savr™ daylight sensor
- Utilizes Lutron® Clear Connect® RF Technology; refer to model number chart below for frequency band data
- Mounts to a US-style junction box through a standard-size knockout
- Complies with requirements for use in a compartment handling environmental air (plenum) per NEC® 2011 300.22(C)(3) (RMJ- and URMJ-)

Models Available

Model Number	Region	Operating Voltage	Frequency Band
RMJ-5T-DV-B	U.S.A., Canada, Mexico	120/277 V~	431.0–437.0 MHz
URMJ-5T-DV-B	U.S.A. (BAA Compliant)	120/277 V~	431.0–437.0 MHz
RMQ-5T-DV-B	Hong Kong, Macau	110–127/220–240 V~	433.05–434.79 MHz
RMM-5T-DV-B	China, Singapore	220–240 V~	868.125–868.475 MHz
RMK-5T-DV-B	Europe, U.A.E.	220–240 V~	868.125–868.850 MHz
RMN-5T-DV-B	India	220–240 V~	865.5–866.5 MHz
RMP-5T-DV-B	Japan	100–200 V~	313.3–314.8 MHz

NOTE: Contact Lutron for frequency band compatibility for your geographic region if it is not indicated above.

Job Name:	Model Numbers:	
Job Number:		

Specifications

Regulatory Approvals

RMJ- and URMJ- models only

- UL Listed
- UL 2043 Plenum-Rated
- FCC approved. Complies with the limits for a Class B device, pursuant to Part 15 of the FCC rules
- CSA and IC (Canada)
- COFETEL (Mexico)
- NOM (Mexico)

RMN- model

- WPC Type Approved (India)

RMK- model

- CE (European Union)
- TRA Type Approved (United Arab Emirates)

RMP- model

- PSE certified (Japan)

Power

- Operating voltage
  - ***RMJ-***, ***URMJ- models:*** 120/277 V∼ 50/60 Hz
  - ***RMQ- model:*** 110–127/220–240 V∼ 50/60 Hz
  - ***RMM- model:*** 220–240 V∼ 50/60 Hz
  - ***RMK- model:*** 220–240 V∼ 50/60 Hz
  - ***RMN- model:*** 220–240 V∼ 50/60 Hz
  - ***RMP- model:*** 100–200 V∼ 50/60 Hz

Output Ratings

- Switch rating of 5 AX. Rated for resistive or capacitive loads as defined by IEC/EN 60669-2-1
- 0–10 V control link for 60 mA maximum output, source or sink automatically configures

Other Power Specifications

- Standby power:
  - 240–277 V∼ 610 mW
  - 120 V∼ 550 mW
- BTU/hour when fully loaded: 9

System Communication

- Operates using Clear Connect® RF Technology for reliable wireless communication; refer to model number chart on page 1 for frequency band details
- RF range is 30 ft (9 m)

Environment

- Ambient operating temperature: 32 °F to 104 °F (0 °C to 40 °C)
- 0% to 90% humidity, non-condensing
- For indoor use only

0–10 V Control Link

- Communicates with up to 60 mA of fixtures
- Control link is IEC SELV/NEC® Class 2
- 0–10 V control can be installed using NEC® Class 1 or Class 2 wiring methods. Alternately, it can be wired to basic or double-insulated devices
- Terminals accept one 18 to 16 AWG (0.75 to 1.5 mm^2) solid wire
- Always consult local wiring codes
- Compatible with ANSI E1.3 2001 (R2006), IEC 60929 Annex E

Default Operation

- Associated wireless input devices control all connected fixtures together
- Occupancy Sensors:
  - Occupied: 100%; Unoccupied: 0% (OFF)
- Pico® Wireless Controls:
  - On: 100%; Favorite Level: 50%; Off: 0% (OFF)
- Daylight Sensor: Decreases electric light in response to additional available daylight

Job Name:	Model Numbers:	
Job Number:		

Specifications (continued)

Key Design Features

- LED status indicator shows load status and provides programming feedback
- Configurable high-end and low-end trim
- Power failure memory: If power is interrupted, connected loads will return to the previous level prior to interruption
- 0–10 V control miswire protection up to 30 V⎓
- Programming lockout can be enabled for public spaces
- 0–10 V control can be programmed to be inverted for 10–0 V control
- Daylight override: Pressing the raise button on an associated Pico® wireless control will temporarily override daylighting for all fixtures wired to the PowPak® Dimming Module with 0–10 V control
  - Daylighting will be re-enabled for all the fixtures wired to the PowPak® Dimming Module with 0–10 V control when one of the following occurs:
    - Two hours have passed since the override.*
    - ON, OFF or Preset button has been pressed on a Pico® wireless device controlling the fixtures wired to the PowPak® Dimming Module with 0–10 V control.
    - All associated Occupancy Sensors have reported unoccupied.

* Each time a daylighting override occurs for any control associated to the PowPak® Dimming Module with 0–10 V control, the two-hour timer is reset.

Advanced Configurations

Pico® Wireless Controls

- Up to nine Pico® wireless controls
- Favorite levels can be set for each Pico® wireless control

Radio Powr Savr™ Daylight Sensor

- The Radio Powr Savr™ daylight sensor will affect all connected ballast and LED drivers equally
- For multple rows of daylighting, a separate PowPak® Dimming Module with 0–10 V must be used for each daylighting row

Minimum Light Level Setting (optional)

- Certain applications, such as hallways, may require that the lights never turn off. For these areas, select the minimum light level option and the load will lower to programed low-end level. Default operation lowers to OFF.

High- and Low-End Trim

- High-end and low-end trim affect all connected fixtures equally, and can be configured from the PowPak® Dimming Module or from any associated Pico® wireless control when unit is not in programming lock-out mode
- Adjustable low-end trim (0–45%). Trimmable low-end can ensure a stable light level. Some fixtures will flicker or drop out if trimmed too low.
- The maximum light output of connected fixtures can be decreased down to 55% for energy savings in over-lit spaces

  Note: The perceived light output of low-end trim may vary between fixture manufacturers and model numbers. For best results, do not mix different ballasts or drivers on the same 0–10 V circuit.

Radio Powr Savr™ Occupancy Sensors

- Radio Powr Savr™ occupancy and vacancy sensors control all connected ballasts or drivers
- Pico® wireless controls can be used to adjust the Occupied levels of fixtures that they control from 1% to 100% (of output signal) or can make them unaffected by Occupancy events
- Vacancy events (area becomes unoccupied) turn all ballasts and driver models off or to minimum light level

Programming Lockout

- Once enabled, all Pico® wireless controls can no longer perform programming or set favorite levels
- To change settings, programming lockout must be unlocked by a button combination directly on the PowPak® Dimming Module.

Job Name:	Model Numbers:	
Job Number:		

System Diagram (RMJ-, URMJ-, RMQ-, and RMM- models)

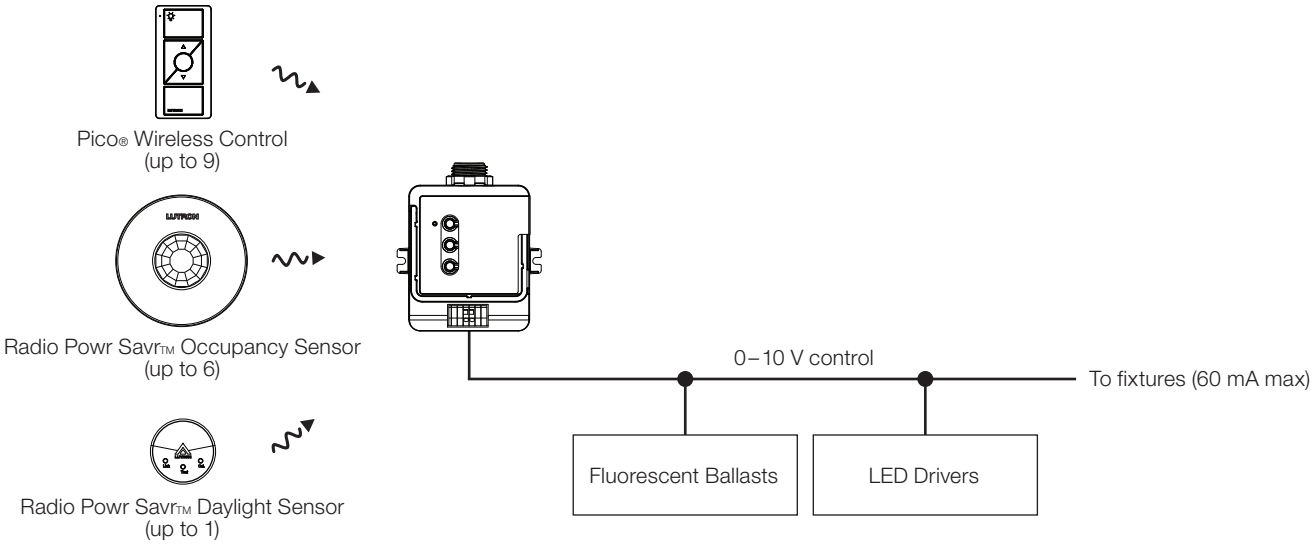

Wiring Schematic (RMJ-, URMJ-, RMQ-, and RMM- models)

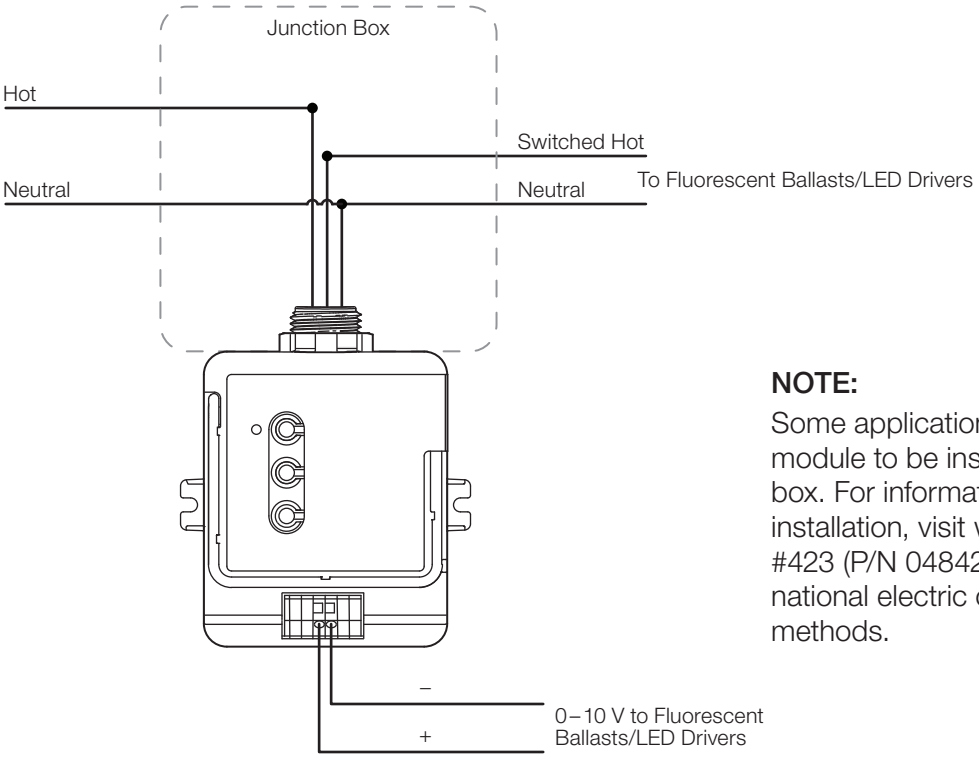

NOTE:

Some applications (in the USA) require the PowPak® module to be installed inside an additional junction box. For information about how to perform this installation, visit www.lutron.com, Application Note #423 (P/N 048423). Please consult all local and national electric codes for proper installation methods.

Job Name:	Model Numbers:	
Job Number:		

369-453b 1 03.12.12

Pico® Wireless Control and Mounting Accessories (for North, Central, and South America)

The Pico® wireless control is a flexible and easy to use device that allows the user to control Lutron® wireless load control devices from anywhere in the space. This battery operated control requires no external power or communication wiring.

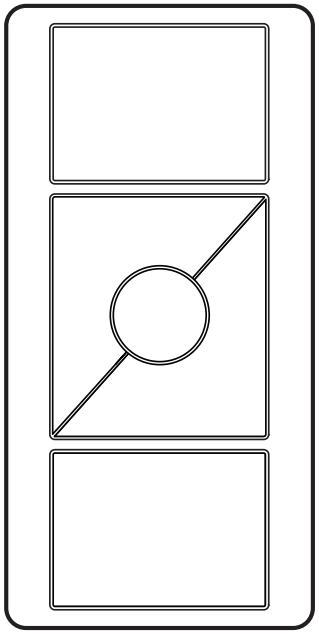

Pico® wireless control

Features

- Provides control for the following:
  - Maestro Wireless® controls
  - PowPak™ Modules
  - Sivoia® QS wireless systems
  - Energi Savr Node™ and Quantum® systems, through the use of a QS sensor module (QSM)
  - GRAFIK Eye® QS wireless systems
  - RadioRA® 2 systems
  - HomeWorks® QS wireless systems
- Control available in a variety of button marking options.
- Easy reconfiguration for use as:
  - Handheld remote
  - Wall mount control (with or without faceplate; faceplate adapter kit sold separately)
  - Car visor control (car visor clip sold separately)
  - A table top control (table top pedestal sold separately).
- Battery powered Pico® wireless control requires no wiring.
- 10 year battery life (one CR2032 battery included).
- Can provide control to blinds, curtains or lighting devices within a 30 ft (9 m) range.

Job Name:	Model Numbers:	
Job Number:		

Specifications

Regulatory

- Lutron® Quality Systems registered to ISO 9001:2008.
- FCC Certified (U.S.A.)
- IC Certified (Canada)
- COFETEL Certified (Mexico)
- SUTEL Certified (Costa Rica)

Power

- Operating Voltage 3 V⎓
- (1) CR2032 Battery (included)

System Communication and Capacity

- Pico® wireless controls communicate using Radio Frequency (RF) at 431 - 437 MHz.
- Thousands of system addresses prevent interference between systems.
- Pico® wireless controls can be assigned to control blinds, curtains or lighting devices that are within a 30 ft (9 m) range.
- Can be configured as a scene or zone control in GRAFIK Eye® QS wireless applications.

Mounting Considerations

- Mounting of any RF devices on or in close proximity to a metal surface will drastically reduce the effective range of radio signal transmission or reception.
- All RF devices must be mounted on non-conductive materials to ensure proper performance.
- Coming soon! If you wish to mount your Pico® wireless control to a metal surface, the “Metal Mounter” will be required in order to maintain proper RF performance. Please contact Lutron® Customer Service for availability at 1.888.LUTRON1 (1.888.588.7661).

Environment

- Ambient operating temperature:
  32 ˚F to 140 ˚F (0 ˚C to 60 ˚C)
- Maximum 90% non-condensing relative humidity
- Indoor use only

Warranty

- 1 Year Limited Warranty
  For additional Warranty information, please visit
  http://www.lutron.com/TechnicalDocumentLibrary/
  369-119_Wallbox_Warranty.pdf

Job Name:	Model Numbers:	
Job Number:		

Model Number

For order quantities of 96 pieces or greater of the same model number, bulk packaging may be available. Mounting hardware is not available with bulk packaging. Please contact Lutron® Customer Service for availability at 1.888.LUTRON1 (1.888.588.7661).

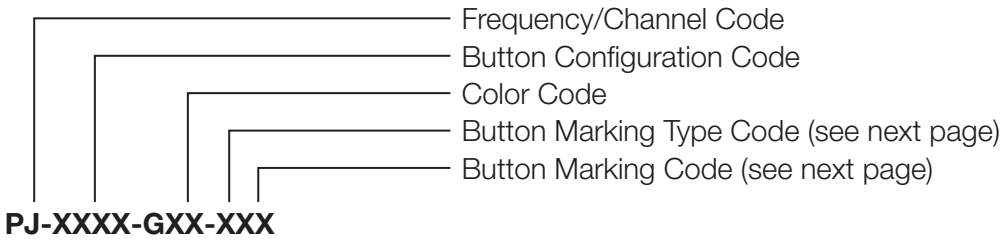

Frequency/Channel Codes:

Code	
J — 431.0 - 437.0 MHz	Contact Lutron's Customer Service at www.lutron.com for frequency/channel code compatibility with your particular geographic region, and for integrating with other Lutron® lighting and shading products.

Button Configuration Codes:

Button Configuration	Code
2 Button	2B
2 Button with Raise/Lower	2BRL
3 Button	3B
3 Button with Raise/Lower	3BRL

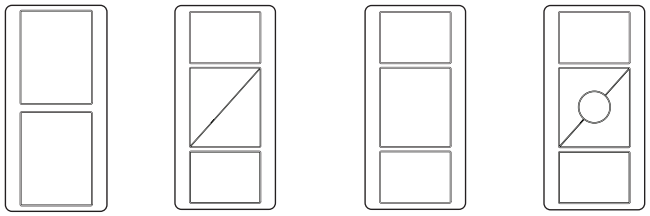

2 Button (2B) | 2 Button with Raise/Lower (2BRL) | 3 Button (3B) | 3 Button with Raise/Lower (3BRL)

Color Codes:

Gloss Color	Code
White	WH
Black	BL
Ivory	IV
Light Almond	LA
White/Gray	WG (Top and Raise buttons are White; Preset, Lower, and Bottom buttons are Gray)

Continued on next page...

Job Name:	Model Numbers:	
Job Number:		

Model Number (continued)

Frequency/Channel Code (see previous page)
Button Configuration Code (see previous page)
Color Code (see previous page)
Button Marking Type Code
Button Marking Code

PX-XXXX-GXX-XXX

Button Marking Type Codes:

Button Marking Type Options	Code
Text	T
Icons	I

Button Marking Codes:

Button Marking Options	Code	Button Marking Options	Code
Light	01	Drapery	08
Shade	02	Blackout	09
Shade 1	05	Sheer	10
Shade 2	06	Blind	13
Screen	07	Power	14

2 Button

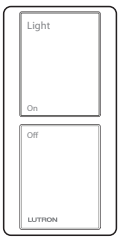

Light (text)
(01)

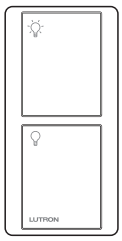

Light (icons)
(01)

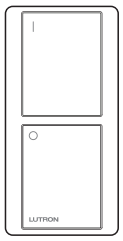

Power (icons)
(14)

Continued on next page...

Job Name:	Model Numbers:	
Job Number:		